Summary of Changes

Mailing Standards of the United States Postal Service, *International Mail Manual*

Issued January 22, 2012

In chapters 1–9 of this online version of *Mailing Standards of the United States Postal Service,* International Mail Manual (IMM®), change bars (vertical lines in the margin) indicate that *Postal Bulletin* updates have been incorporated in the adjacent text (note that the change bars appear only in the PDF version). However, in the individual country listings (ICLs) of this online IMM, change bars do not appear even though *Postal Bulletin* updates have been incorporated in the text.

This chapter, subchapter, part, section, or ICL…	is…	effective…	as noted in Postal Bulletin issue…
Chapter 2, Conditions for Mailing			
213	revised in several sections to reflect changes to prices and standards for GXG service.	1-22-2012	22326
221	revised in several sections to reflect changes to prices and standards for Express Mail International service.	1-22-2012	22326
222	revised in several sections to reflect changes to prices and standards for Express Mail International service.	1-22-2012	22326
223	revised in several sections to reflect changes to prices and standards for Express Mail International service.	1-22-2012	22326
232	revised in several sections to reflect changes to prices and standards for Priority Mail International service.	1-22-2012	22326
Exhibit 232.73	revised to reflect changes to the indemnity limits for ordinary Priority Mail International parcels (and later renumbered to Exhibit 232.83).	1-1-2012	22325
232.93 and 232.94	revised to provide current information regarding the availability of return receipt service when used in conjunction with Registered Mail service and insured Priority Mail International parcels.	1-22-2012	22328
233	revised in several sections to reflect changes to prices and standards for Priority Mail International service.	1-22-2012	22326
242.42 and 242.43	revised to provide current information regarding the availability of return receipt service when used in conjunction with Registered Mail service. ***Note:*** 242.42 (on Registered Mail service) is the old 242.43, which has just been moved and renumbered, but the text is unchanged; 242.43 (on return receipt service) is the old 242.42, but in addition to having been moved and renumbered as 242.43, the text is also revised.	1-22-2012	22328
Chapter 3, Extra Services			
323.62 and Exhibit 323.62	revised to reflect a change in the conversion rate between special drawing right (SDR) values and U.S. dollars.	1-1-2012	22325
333.2	revised to reflect changes to the indemnity limit for Registered Mail items.	1-1-2012	22325

This chapter, subchapter, part, section, or ICL…	is…	effective…	as noted in Postal Bulletin issue…
Chapter 7, Treatment of Inbound Mail			
762.2	revised to clarify the proper handling of an undeliverable domestic mailpiece that is addressed to a U.S. addressee and that bears the sender's foreign return address.	1-22-2012	22323
Chapter 9, Inquiries, Indemnities, and Refunds			
934.2	revised to reflect changes to the indemnity limit for Registered Mail items.	1-1-2012	22325
Country Price Groups and Weight Limits			
Tonga	revised to reflect the availability of Express Mail International service.	1-22-2012	22326
Individual Country Listing			
Each country that offers GXG service	revised to reflect changes to the prices for GXG service.	1-22-2012	22326
Each country that offers Express Mail International service	revised to reflect changes to the prices for Express Mail International service and, if applicable, to the fees for Express Mail International merchandise insurance.	1-22-2012	22326
Each country that offers Priority Mail International service	revised to reflect changes to the prices for Priority Mail International service and, if applicable, to the fees for Priority Mail International insurance.	1-22-2012	22326
Each country that offers First-Class Mail International service	revised to reflect changes to the prices for First-Class Mail International service.	1-22-2012	22326
Each country that offers extra services	revised to reflect changes to the fees for international extra services.	1-22-2012	22326
Each country that offers Registered Mail service	revised to reflect changes to the indemnity limit for Registered Mail items.	1-1-2012	22325
Austria	revised to reflect changes to the Prohibitions section.	1-22-2012	22325
Cuba	revised to reflect current standards for authorized dutiable items sent by Priority Mail International service.	1-22-2012	22325
Great Britain and Northern Ireland	revised to reflect changes to the Prohibitions and Restrictions sections, and to the availability of Priority Mail International insurance.	1-22-2012	22325
Hong Kong	revised to reflect changes to the size limits for Priority Mail International service.	1-22-2012	22325
Hungary	revised to reflect changes to the Observations section.	1-22-2012	22325
Japan	revised to reflect changes to the Prohibitions section.	1-22-2012	22325
Pakistan	revised to reflect changes to the Restrictions section.	1-22-2012	22325
Poland	revised to reflect changes to the Restrictions section.	1-22-2012	22325
Russia	revised to reflect changes to the Prohibitions and Restrictions sections.	1-22-2012	22325
Serbia	revised to reflect changes to the Restrictions section.	1-22-2012	22325

This chapter, subchapter, part, section, or ICL…	is…	effective…	as noted in Postal Bulletin issue…
Tonga	revised to reflect the availability of Express Mail International service.	1-22-2012	22326
Turkey	revised to reflect changes to the Prohibitions and Restrictions sections.	1-22-2012	22325
Ukraine	revised to reflect changes to the Prohibitions and Restrictions sections.	1-22-2012	22325
Venezuela	revised to reflect changes to the Prohibitions section.	1-22-2012	22325
Vietnam	revised to reflect changes to the Prohibitions section.	1-22-2012	22325

Mailing Standards of the United States Postal Service, International Mail Manual

January 22, 2012

Mailing Standards of the United States Postal Service, International Mail Manual (IMM®) provides our official prices and standards for all international mailing services. Many mailers find it helpful to reference these standards as they prepare and deposit their mail.

Mailers looking for an overview of prices and international extra services can use Notice 123, *Price List*. It provides the most commonly sought international mailing information in an easy-to-read and easy-to-find format. Notice 123 is available on our Postal Explorer® Web site at *pe.usps.com*. Postal Explorer also provides helpful search features, mailing tools, and price calculators to make mailing easy.

Summary of Changes

The IMM is updated frequently on Postal Explorer at *pe.usps.com*. Revisions are published in the Update Notice by IMM module. Mailing standards in the IMM are revised by notices published in the *Postal Bulletin* or the *Federal Register*.

Availability

Public: The public can access the updated IMM in PDF and HTML formats on Postal Explorer at *pe.usps.com*, or by ordering the Postal Explorer CD-ROM. Archived copies may be available through the U.S. Government Printing Office, 202-512-1800.

USPS: Postal Service employees can access the updated IMM in PDF or HTML formats on Postal Explorer at *pe.usps.com* or on the Postal Explorer CD-ROM.

How to Use This Book

The IMM is organized into nine chapters that describe mailing methods based on shape of mail, category of mail service, and topic. The chapters are followed by Individual Country Listings that contain specific mailing standards for each country.

Comments

Contact your local Post Office™, business mail entry office, or the Pricing and Classification Service Center (PCSC) with comments or questions about our mailing standards. *Mailing Standards of the United States Postal Service*, Domestic Mail Manual (DMM®) section 608.8.4 provides addresses and telephone numbers of business mail entry offices and the PCSC.

Maura Robinson
Vice President
Pricing

Contents

Summary of Changes

Transmittal Letter i

1 International Mail Services 1
110 General Information 1
111 Scope 1
112 Mailer Responsibility 1
113 Individual Country Listings 1
114 Availability 1
115 Official Correspondence 2
115.1 Communicating With Headquarters 2
115.11 Operations 2
115.12 Policy and Representation 2
115.13 Transportation and Distribution 2
115.14 Investigations 3
115.15 International Money Orders 3
115.2 Correspondence With Foreign Postal Authorities 3
115.21 Correspondence Permitted 3
115.22 Correspondence Not Permitted 3
115.3 Correspondence With Foreign Individuals 3
115.31 Correspondence Permitted 3
115.32 Customer's Address 3
120 Preparation for Mailing 4
121 Packaging — Sender's Responsibility 4
122 Addressing 4
122.1 Destination Address 4
122.2 Return Address 5
122.21 General 5
122.22 Required Use of Return Address 5
122.23 Return Address Elements and Placement 5
123 Customs Forms and Online Shipping Labels 6
123.1 General 6
123.2 Availability 6
123.3 Privately Printed Forms 6

123.4 Nonpostal Forms . . . 7
123.41 Nonpostal Export Regulations . . . 7
123.42 Commercial Invoices . . . 7
123.5 Place of Mailing . . . 7
123.6 Required Usage . . . 7
123.61 Conditions . . . 7
123.62 Known Mailers . . . 10
123.63 Documents and Merchandise . . . 11
123.64 Additional Security Controls . . . 12
123.7 Completing Customs Forms . . . 12
123.71 PS Form 2976, Customs Declaration CN 22 — Sender's Declaration . . . 12
123.72 PS Form 2976-A, Customs Declaration and Dispatch Note — CP 72 . . . 15
123.73 PS Form 2976-E, Customs Declaration Envelope — CP 91 . . . 20
130 Mailability . . . 20
131 General . . . 20
131.1 Domestic Limits . . . 20
131.2 International Limits . . . 20
131.3 Individual Country Prohibitions and Restrictions . . . 21
131.31 Information Available . . . 21
131.32 Prohibited and Restricted Articles . . . 21
131.33 Return or Seizure of Mail . . . 21
131.34 Foreign Customs Information . . . 21
131.4 Mailer Responsibility . . . 21
131.5 Preparation for Mailing . . . 21
131.51 General Packaging Requirements . . . 21
131.52 Special Packaging Requirements . . . 22
132 Written, Printed, and Graphic Matter . . . 22
132.1 Domestic Limits . . . 22
132.2 Reply Cards and Envelopes . . . 22
133 Improperly Addressed Mail . . . 23
134 Valuable Articles . . . 23
134.1 Service Options . . . 23
134.2 List of Articles . . . 23
134.3 Prohibitions . . . 24
135 Mailable Dangerous Goods . . . 24
135.1 Infectious Substances . . . 24
135.11 General Conditions . . . 24
135.12 Type of Mail . . . 25
135.13 Senders and Receivers . . . 25
135.2 Authorization . . . 25
135.21 Authorized Institutions . . . 25
135.22 Request for Authorization . . . 25

135.3 Packaging, Marking, Labeling . . . 25
135.31 Category B Infectious Substances . . . 25
135.32 Nonregulated Materials (Noninfectious Biological Substances) . . . 26
135.33 Exempt Human or Animal Specimens . . . 26
135.4 Handling and Dispatch of Infectious Substances . . . 26
135.41 Biological Substances . . . 26
135.42 Infectious Substances . . . 26
135.5 Radioactive Materials . . . 27
136 Nonmailable Goods . . . 27
136.1 Dangerous Goods . . . 27
136.2 Inert Replica and Explosive Devices . . . 28
136.3 Counterfeit and Pirated Items . . . 28
136.4 Cigarettes and Smokeless Tobacco . . . 28
137 Firearms, Knives, and Sharp Instruments . . . 28
138 Perishable Matter . . . 28
138.1 Animals . . . 28
138.2 Plants . . . 29
138.3 Eggs . . . 29
138.31 Restrictions . . . 29
138.32 Packaging . . . 29
138.4 Food and Other Perishable Articles . . . 29
140 International Mail Categories . . . 29
141 Definitions . . . 29
141.1 General . . . 29
141.2 Global Express Guaranteed . . . 30
141.3 Express Mail International . . . 30
141.4 Priority Mail International . . . 30
141.5 First-Class Mail International . . . 31
142 Official Mail . . . 31
142.1 Mailings by Federal Agencies . . . 31
142.2 Postal Service Mailings . . . 31
142.3 Mail of a Former President and Surviving Spouse of a Former President . . . 31
142.4 General Secretariat of the Organization of American States (OAS) . . . 32
142.5 Pan American Sanitary Bureau Mail . . . 32
150 Postage . . . 33
151 Postage Prices . . . 33
152 Payment Methods . . . 33
152.1 Prepayment . . . 33
152.2 Stamps . . . 33
152.3 Computing Postage . . . 33
152.31 Determining Single-Piece Weight . . . 33
152.32 Rounding Numerical Values . . . 34

152.4 Permit Imprint . . . 34
152.41 Conditions of Use . . . 34
152.42 Place of Mailing . . . 34
152.43 Usage Criteria . . . 34
152.44 Required Format . . . 35
153 Placement of Postage . . . 37
154 Remailed Items . . . 37

2 Conditions for Mailing . . . 39
210 Global Express Guaranteed . . . 39
211 Description and Physical Characteristics . . . 39
211.1 General . . . 39
211.2 Physical Characteristics . . . 39
211.21 Weight Limits . . . 39
211.22 Dimensions . . . 39
212 Eligibility . . . 40
212.1 General — All Global Express Guaranteed Shipments . . . 40
212.2 Customs Forms Required . . . 40
212.3 Mail Sealed Against Inspection . . . 40
212.4 Inquiries, Service Guarantees, Postage Refunds, and Indemnity . . . 40
212.41 Service Guarantee . . . 40
212.42 Transit Days for Shipments . . . 40
212.43 Inquiries . . . 41
212.44 Postage Refunds . . . 41
212.45 Global Express Guaranteed Insurance and Indemnity . . . 41
212.46 Indemnity Claims . . . 41
212.47 Liability for Lost or Damaged Contents . . . 42
212.5 Extra Services — Insurance . . . 42
213 Prices and Postage Payment Methods . . . 42
213.1 Availability and Price Application — General . . . 42
213.2 Postage Payment Methods — General . . . 42
213.3 Determining Postage for Global Express Guaranteed Service . . . 42
213.31 USPS-Produced Global Express Guaranteed Envelopes . . . 42
213.32 Mailer-Supplied Packaging . . . 42
213.4 Dimensional Weight . . . 43
213.41 Determining Dimensional Weight for a Rectangular-Shaped Parcel . . . 43
213.42 Determining Dimensional Weight for a Nonrectangular-Shaped Parcel . . . 43
213.5 Destinating Countries and Price Groups . . . 43
213.6 Commercial Prices . . . 49
213.61 Commercial Base Prices . . . 49
213.62 Commercial Plus Prices . . . 49

213.7 Online Postage Payment Method 49
213.71 Online Prices 49
213.72 Markings Requirements 50
213.73 Determining Online Prices 50
213.74 Notification 50
213.75 Postage Adjustments of Online Shipments 50
213.76 Deposit of Online Shipments within 24 Hours 50
213.8 Permit Imprint 50
213.81 Permit Imprint — General 50
213.82 Permit Imprint — Commercial Base Prices 50
213.9 Official Mail 51
213.91 Mailings by Federal Agencies 51
213.92 Postal Service Mailings 51
214 Mail Preparation 51
214.1 Preparation by the Sender 51
214.2 Preparation by Acceptance Employee 52
215 Mail Entry and Deposit 52
215.1 Entry Service Areas — U.S. Origins 52
215.2 Place of Mailing 54
215.21 Items Paid With Methods Other Than Postage Stamps 54
215.22 Items Weighing 13 Ounces or Less and Paid With Postage Stamps 54
215.23 Items Weighing More Than 13 Ounces and Paid With Postage Stamps 54
215.24 Acceptance of Shipments 54
215.3 Pickup On Demand Service 55
215.4 Carrier Pickup Service 55
220 Express Mail International 55
221 Description and Physical Characteristics 55
221.1 General 55
221.2 Express Mail International With Guarantee Service 55
221.3 Express Mail International Flat Rate Envelopes 56
221.4 Express Mail International Flat Rate Boxes 56
221.5 Physical Characteristics 56
221.51 Weight Limits 56
221.52 Dimensions — Express Mail International Parcels 56
222 Eligibility 56
222.1 General — All Express Mail International Shipments 56
222.2 Prohibited Items in All Express Mail International Shipments 56
222.3 Express Mail International Flat Rate Envelopes 57
222.4 Express Mail International Flat Rate Boxes 57
222.5 Customs Forms Required 58
222.6 Mail Sealed Against Inspection 58

222.7 Express Mail International Insurance and Indemnity . . . 58
222.71 Merchandise Insurance . . . 58
222.72 Document Reconstruction Insurance . . . 58
222.73 Indemnity for Delivery Delays . . . 58
222.8 Extra Services — Merchandise Insurance . . . 58
223 Prices and Postage Payment Methods . . . 58
223.1 Prices . . . 58
223.11 Availability and Price Application — General . . . 58
223.12 Commercial Base Prices . . . 59
223.13 Commercial Plus Prices . . . 59
223.14 Express Mail International Flat Rate Envelope Prices . . . 59
223.15 Express Mail International Flat Rate Boxes Prices . . . 59
223.2 Postage Payment Methods . . . 59
223.21 General . . . 59
223.22 Permit Imprint . . . 59
223.23 Express Mail Corporate Account . . . 60
223.24 Online Postage Payment Method . . . 60
223.3 Official Mail . . . 61
223.31 Mailings by Federal Agencies . . . 61
223.32 Postal Service Mailings . . . 61
224 Mail Preparation . . . 61
224.1 Preparation by Sender . . . 61
224.2 Preparation by Acceptance Employee . . . 61
225 Mail Entry and Deposit . . . 62
225.1 Place of Mailing . . . 62
225.11 Items Requiring a Completed Customs Declaration . . . 62
225.12 Exceptional Items Requiring a Completed Customs Declaration . . . 62
225.13 Items Not Requiring a Customs Declaration . . . 62
225.2 Pickup On Demand Service . . . 63
225.3 Carrier Pickup Service . . . 63
230 Priority Mail International . . . 64
231 Description and Physical Characteristics . . . 64
231.1 General . . . 64
231.2 Physical Characteristics . . . 64
231.21 Weight Limits . . . 64
231.22 Dimensions — Priority Mail International Parcels . . . 64
231.23 Measuring Parcel Dimensions . . . 64
232 Eligibility . . . 66
232.1 Priority Mail International Flat Rate Envelopes and Small Flat Rate Priced Boxes . . . 66
232.2 Eligible Priority Mail International Flat Rate Envelopes and Small Flat Rate Priced Boxes . . . 66
232.3 Priority Mail International Medium and Large Flat Rate Boxes . . . 67

232.4 Eligible Priority Mail International Medium and Large Flat Rate Boxes 67
232.5 Priority Mail International Parcels 68
232.6 Customs Forms Required 68
232.61 Priority Mail International Flat Rate Envelopes and Small Flat Rate Priced Boxes 68
232.62 Priority Mail International Medium and Large Flat Rate Boxes 68
232.63 Priority Mail International Ordinary and Insured Parcels 69
232.7 Mail Sealed Against Inspection 69
232.8 Priority Mail International Insurance and Indemnity 69
232.81 Indemnity 69
232.82 Exclusions 69
232.83 Ordinary Priority Mail International Weight and Indemnity Limits 70
232.9 Extra Services 70
232.91 Certificate of Mailing. 70
232.92 Merchandise Insurance 70
232.93 Registered Mail Service 71
232.94 Return Receipt Service. 71
232.95 Restricted Delivery 71
233 Prices and Postage Payment Methods. 71
233.1 Prices. 71
233.11 Availability and Price Application — General 71
233.12 Commercial Base Prices 71
233.13 Commercial Plus Prices 71
233.14 Priority Mail International Flat Rate Envelopes and Small Flat Rate Priced Boxes 72
233.15 Priority Mail International Medium and Large Flat Rate Boxes 72
233.16 Priority Mail International Parcels. 72
233.2 Postage Payment Methods 72
233.21 General 72
233.22 Permit Imprint. 72
233.23 Online Postage Payment Method. 73
233.3 Official Mail 74
233.31 Mailings by Federal Agencies. 74
233.32 Postal Service Mailings 74
234 Mail Preparation 74
234.1 Addressing. 74
234.2 Marking 74
234.3 Customs Documentation. 74
234.4 Sealing. 74
234.5 Packaging 74
234.51 Packaging Requirements — General 74
234.52 Types of Containers 75
234.53 Closure Options for Wooden Boxes or Bags 75

235 Mail Entry and Deposit 75
235.1 Place of Mailing 75
235.11 Items Requiring a Completed Customs Declaration 75
235.12 Items Bearing a Completed Customs Declaration With an Electronic Round Date 75
235.13 Priority Mail International Flat Rate Envelopes Not Requiring a Customs Declaration 76
235.2 Pickup On Demand Service. 77
235.3 Carrier Pickup Service 77
240 First-Class Mail International 77
241 Description and Physical Characteristics 77
241.1 General 77
241.2 Physical Characteristics 77
241.21 Physical Standards — Letters 77
241.22 Physical Standards — Cards 79
241.23 Physical Standards — Large Envelopes (Flats) 80
241.24 Physical Standards — Packages (Small Packets) 83
242 Eligibility 83
242.1 Content Eligibility. 83
242.2 Customs Forms Required 84
242.21 Dutiable Merchandise. 84
242.22 Nondutiable Merchandise 84
242.3 Mail Sealed Against Inspection 84
242.4 Extra Services 84
242.41 Certificate of Mailing. 84
242.42 Registered Mail Service 84
242.43 Return Receipt Service. 84
242.44 Restricted Delivery 85
243 Prices and Postage Payment Methods. 85
243.1 Prices. 85
243.11 Prices and Price Application — General 85
243.12 Price Computation 85
243.13 Destinating Countries and Price Groups 85
243.2 Postage Payment Methods — General 89
243.3 Permit Imprint — General 90
243.4 Official Mail 90
243.41 Mailings by Federal Agencies. 90
243.42 Postal Service Mailings 90
244 Mail Preparation 90
244.1 Addressing. 90
244.2 Marking 90
244.3 Sealing. 90
244.4 Packaging 91

245 Mail Entry and Deposit — Place of Mailing . . . 91
245.1 Items Requiring a Completed Customs Declaration . . . 91
245.2 Items Bearing a Completed Customs Declaration With an Electronic Round Date . . . 91
245.3 Items Not Requiring a Customs Declaration . . . 92
245.31 Items Weighing 13 Ounces or Less and Paid With Postage Stamps . . . 92
245.32 Items Weighing More Than 13 Ounces and Paid With Postage Stamps . . . 92
245.4 Items Paid With Methods Other Than Postage Stamps . . . 92
250 (Reserved) . . . 92
260 Direct Sacks of Printed Matter to One Addressee (M-bags) . . . 93
261 Description . . . 93
261.1 General . . . 93
261.2 Eligibility . . . 93
261.21 Printed Matter . . . 93
261.22 Other Articles . . . 93
261.23 Mail Not Sealed Against Inspection . . . 94
262 Postage Prices and Fees . . . 94
262.1 Airmail M-bags . . . 94
262.2 International Priority Airmail (IPA) M-bags . . . 94
262.3 International Surface Air Lift (ISAL) M-bags . . . 94
262.4 Postage Calculation . . . 95
262.5 Stamps, Postage Evidencing Systems, PVI Labels, or Permit Imprint . . . 95
263 Weight and Size Limits . . . 95
263.1 Weight Limits . . . 95
263.2 Size Limits . . . 95
264 Mail Preparation . . . 95
264.1 Marking . . . 95
264.2 Sacking and Labeling . . . 96
264.21 Equipment . . . 96
264.22 Tagging . . . 96
264.23 Multiple Sacks to One Addressee . . . 96
264.24 Country Destination Name . . . 96
264.3 Customs Forms Required . . . 96
265 Extra Services . . . 96
270 Free Matter for the Blind or Other Physically Handicapped Persons . . . 96
271 Description . . . 96
271.1 General . . . 96
271.2 Eligibility . . . 97
271.3 Matter Sent to or by Blind or Other Physically Handicapped Persons . . . 97
272 Postage Prices . . . 97
273 Weight and Size Limits . . . 97
273.1 Weight Limit . . . 97
273.2 Size Limits . . . 97

274 Mail Preparation . . . 98
274.1 Addressing . . . 98
274.2 Marking . . . 98
274.3 Sealing . . . 98
274.4 Packaging . . . 98
274.41 Mail Not Sealed Against Inspection . . . 98
274.42 Types of Containers . . . 98
275 Extra Services . . . 98
276 Customs Forms Required . . . 98
280 (Reserved) . . . 98
290 Commercial Services . . . 99
291 (Reserved) . . . 99
292 International Priority Airmail (IPA) Service . . . 99
292.1 Description . . . 99
292.11 General . . . 99
292.12 Mail Sealed Against Inspection . . . 99
292.13 IPA M-bags . . . 99
292.2 Eligibility . . . 99
292.21 Qualifying Mailpieces . . . 99
292.22 Availability . . . 99
292.23 Minimum Quantity Requirements . . . 99
292.24 Dutiable Items . . . 100
292.25 Customs Forms Requirements . . . 100
292.26 Extra Services . . . 100
292.3 Prices and Postage Payment Methods . . . 100
292.31 Prices . . . 100
292.32 Computation of Postage . . . 100
292.33 Postage Payment Methods . . . 101
292.4 Mail Preparation . . . 102
292.41 Addressing and Return Address . . . 102
292.42 Marking . . . 102
292.43 Sealing and Packaging . . . 103
292.44 Physical Characteristics and Requirements for All Bundles . . . 103
292.45 Sortation . . . 103
292.46 Sacking Requirements . . . 109
292.47 Mail Preparation for Canada . . . 111
292.5 Mail Entry and Deposit . . . 113
292.51 Separation by Price Group . . . 113
292.52 Full Service . . . 113
292.53 Drop Shipment . . . 113
293 International Surface Air Lift (ISAL) Service . . . 114
293.1 Description . . . 114
293.11 General . . . 114

293.12 Mail Sealed Against Inspection . . . 114
293.13 ISAL M-bags. . . . 115
293.2 Eligibility. . . . 115
293.21 Qualifying Mailpieces . . . 115
293.22 Availability. . . . 115
293.23 Minimum Quantity Requirements. . . . 115
293.24 Dutiable Items. . . . 115
293.25 Customs Forms Requirements. . . . 115
293.26 Extra Services. . . . 115
293.3 Prices and Postage Payment Methods . . . 116
293.31 Prices . . . 116
293.32 Computation of Postage . . . 116
293.33 Postage Payment Methods . . . 116
293.4 Mail Preparation. . . . 118
293.41 Addressing and Return Address . . . 118
293.42 Marking. . . . 118
293.43 Sealing and Packaging. . . . 118
293.44 Physical Characteristics and Requirements for All Bundles . . . 119
293.45 Sortation . . . 119
293.46 Sacking Requirements . . . 122
293.47 Canadian Sack Labeling Information . . . 124
293.5 Mail Entry and Deposit . . . 125
293.51 Separation by Price Group . . . 125
293.52 Full Service . . . 125
293.53 Drop Shipment . . . 125
294 (Reserved) . . . 126
295 (Reserved) . . . 126
296 (Reserved) . . . 126
297 Customized Agreements. . . . 127
297.1 Description. . . . 127
297.2 Qualifying Mailers . . . 127
297.3 Criteria . . . 127

3 Extra Services . . . 129
310 Certificate of Mailing. . . . 129
311 Description . . . 129
312 Availability . . . 129
312.1 At Time of Purchase . . . 129
312.2 After Mailing (Additional Criteria) . . . 129
313 Fees. . . . 129
313.1 Individual Pieces . . . 129
313.2 Three or More Pieces . . . 130
313.3 Bulk Pieces . . . 130

314 Processing Requests . . . 130
314.1 Forms . . . 130
314.11 Postal Service Forms . . . 130
314.12 Treasury Department Forms . . . 130
314.13 Agriculture Department Forms . . . 130
314.2 Preparation . . . 131
314.21 Sender's Responsibility . . . 131
314.22 Accepting Clerk's Responsibility . . . 131
320 Insurance . . . 131
321 Global Express Guaranteed Insurance . . . 131
321.1 Description . . . 131
321.2 Availability . . . 131
321.3 Additional Coverage and Fees . . . 132
322 Express Mail International Insurance . . . 132
322.1 Description . . . 132
322.2 Availability . . . 132
322.3 Additional Coverage and Fees . . . 132
322.4 Return Receipt Service . . . 132
323 Priority Mail International Insurance . . . 132
323.1 Description . . . 132
323.2 Availability . . . 133
323.3 Coverage and Fees . . . 133
323.4 Return Receipt . . . 133
323.5 Insured Value and Indemnity Claims . . . 133
323.51 Insured Value and Declared Value . . . 133
323.52 Indemnity Claims and Payments . . . 133
323.6 Preparation of Insured Priority Mail International Parcels . . . 133
323.61 Mailing Receipt and Insurance Number . . . 133
323.62 Accepting Clerk's Responsibility . . . 134
323.63 Postmarking . . . 137
323.7 Sender's Responsibility . . . 137
323.71 Mailing Receipt . . . 137
323.72 Marking . . . 137
323.73 Sealing . . . 137
330 Registered Mail . . . 137
331 Description . . . 137
332 Availability . . . 137
333 Fees and Indemnity Limits . . . 138
333.1 Registration Fees . . . 138
333.2 Indemnity Limit . . . 138

334 Processing Requests . . . 138
334.1 Mailing Receipt and Registration Number. . . . 138
334.11 General Use . . . 138
334.12 Sender's Responsibility . . . 138
334.13 Accepting Clerk's Responsibility . . . 138
334.14 Preparation . . . 139
334.2 Marking . . . 139
334.3 Postmarking. . . . 139
334.31 Placement. . . . 139
334.32 Registered Matter for the Blind . . . 139
334.4 Sealing . . . 139
334.41 Sender's Responsibility . . . 139
334.42 Registered Free Matter for the Blind or Other Physically Handicapped Persons. . . . 139
334.5 Return Receipt and Restricted Delivery. . . . 139
335 Indemnity Claims and Payments. . . . 140
340 Return Receipt . . . 140
341 Description . . . 140
342 Availability . . . 140
343 Fee. . . . 140
344 Processing Requests . . . 140
344.1 Form . . . 140
344.11 Sender's Responsibility . . . 140
344.12 Accepting Clerk's Responsibility . . . 140
344.2 Marking . . . 141
344.3 Return Receipt Improperly Completed or Not Received. . . . 141
350 Restricted Delivery . . . 141
351 Description . . . 141
351.1 General . . . 141
351.2 Undeliverable Mail . . . 141
352 Availability . . . 141
353 Fee. . . . 141
354 Processing Requests . . . 142
354.1 Marking . . . 142
354.2 Postage . . . 142
360 (Reserved). . . . 142
370 International Money Transfer Services . . . 142
371 International Money Orders. . . . 142
371.1 Description. . . . 142
371.11 General . . . 142
371.12 Maximum Amount . . . 142
371.2 Availability . . . 142
371.3 Fees . . . 143

371.4 Processing Requirements . . . 143
371.41 Form Required — International Postal Money Order (Form MP1) . . . 143
371.42 Preparation by Purchaser . . . 143
371.43 Preparation by Postal Service Employee . . . 143
371.5 Procedures for Cashing Money Orders Issued by Foreign Countries . . . 144
371.51 Valid Postal Money Orders . . . 144
371.52 Canadian Money Orders . . . 144
371.53 Japanese Money Orders . . . 144
371.6 Lost Reissued Money Orders . . . 144
371.7 Inquiries . . . 144
371.71 Who May Receive Information . . . 144
371.72 Inquiries Regarding Payment . . . 144
372 Sure Money (DineroSeguro) . . . 145
372.1 Description . . . 145
372.2 Options and Restrictions . . . 145
372.3 Fees . . . 145
372.4 Participating Post Offices . . . 145
372.5 Availability . . . 146
372.6 Currencies by Country . . . 146
372.7 Service Guarantee . . . 146
380 Supplemental Services . . . 146
381 International Reply Coupons . . . 146
381.1 Description . . . 146
381.2 Availability . . . 147
381.3 Selling Price and Exchange Value . . . 147
381.4 Processing Requests . . . 147
382 International Business Reply Service . . . 148
382.1 Description . . . 148
382.2 Availability . . . 148
382.3 Who May Distribute IBRS Mail . . . 148
382.4 Postage and Fees . . . 148
382.5 Size and Weight Requirements . . . 149
382.51 Cards . . . 149
382.52 Envelopes . . . 149
382.6 Formatting Requirements . . . 149
382.61 General . . . 149
382.62 Air Mail Endorsement . . . 149
382.63 FIM . . . 149
382.64 No Postage Necessary Endorsement . . . 150
382.65 Horizontal Bars . . . 150
382.66 Business Reply Legend . . . 150
382.67 Delivery Address . . . 150
382.68 Barcode . . . 151
382.7 Foreign International Business Reply Service . . . 153

4 Treatment of Outbound Mail . . . 155
410 Postmarking . . . 155
420 Unpaid and Shortpaid Mail . . . 155
421 Check for Sufficient Postage . . . 155
422 Unpaid Mail . . . 155
422.1 Unpaid Mail With a Return Address . . . 155
422.2 Unpaid Mail Without a Return Address . . . 155
423 Shortpaid Mail . . . 155
423.1 General Procedures at the Originating Mailing Office . . . 155
423.2 Disposition . . . 155
423.21 Global Express Guaranteed (GXG) Shipments . . . 155
423.22 Express Mail International Shipments . . . 156
423.23 Priority Mail International Parcel Items (Other Than Priority Mail International Flat Rate Envelopes and Small Flat Rate Boxes) . . . 156
423.24 First-Class Mail International Items (including Postcards), Airmail M-bags, Priority Mail International Flat Rate Envelopes, and Priority Mail International Small Flat Rate Priced Boxes . . . 157
423.3 Credit for Postage Paid . . . 157
423.4 Parcels at Other Than Mailing Offices . . . 157
430 Improperly Prepared Mail . . . 158
431 Insufficient Address . . . 158
432 Oversized or Undersized Items . . . 158
433 Oversized Cards . . . 158
434 Reply-Paid Cards . . . 158
435 Detached Customs Declaration Forms . . . 158
440 Extra Services Mail — Registered Mail . . . 158
441 Recording and Dispatching . . . 158
442 Registered Mail Found With Ordinary Mail . . . 159
442.1 Disposition . . . 159
442.2 Complete the Registration Process . . . 159
442.3 Shortpaid Mail . . . 159

5 Nonpostal Export Regulations . . . 161
510 Office of Foreign Assets Control (OFAC) Regulations — U.S. Department of the Treasury . 161
511 General . . . 161
512 Prohibited Destinations, Specially Designated Nationals, and Blocked Persons . . . 161
513 Additional Standards . . . 161
514 Exceptions . . . 161
515 Mailer Compliance . . . 162
516 Additional Information . . . 162
520 Foreign Trade Regulations — U.S. Census Bureau . . . 162
521 General . . . 162
522 Additional Assistance . . . 162
523 Mailpieces Sent to APOs, FPOs, and DPOs . . . 162

524 Proof of Filing Citation (PFC) . . . 162
524.1 General . . . 162
524.2 Filing Requirements . . . 163
524.21 Mandatory Filing . . . 163
524.22 How to File Electronic Export Information and Obtain a Proof of Filing Citation . . . 164
525 AES Downtime Citation . . . 164
526 Exemption and Exclusion Legend . . . 164
526.1 General . . . 164
526.2 When Applicable . . . 165
527 Placement of PFC, AES Downtime Citation, or Exemption and Exclusion Legend . . . 165
530 Commodities and Technical Data . . . 166
531 Scope and Applicability of Export Licensing Requirements . . . 166
531.1 U.S. Department of Commerce — Bureau of Industry and Security; Export Controls . . . 166
531.2 Export Enforcement . . . 167
532 Export Licenses . . . 167
532.1 General . . . 167
532.2 Export — Definition . . . 168
532.3 How to Determine If an Export License Is Needed . . . 168
532.4 Additional Information . . . 168
533 Additional Standards . . . 169
533.1 Shipper's Export Declaration . . . 169
533.2 Shipper's Electronic Export Filing Required . . . 169
533.3 Processing at Post Office Facilities . . . 169
540 Munitions (Defense Articles) and Related Technical Data . . . 169
541 Licensing Requirements . . . 169
541.1 Individual Licenses . . . 169
541.11 Exporting Defense Articles . . . 169
541.12 Exporting Technical Data . . . 169
541.2 Prohibited Countries . . . 170
541.3 Exporting of Government Shipments . . . 171
541.4 Obtaining Additional Information . . . 171
542 Mailing Under Individual Licenses . . . 171
542.1 Marking by Sender . . . 171
542.2 Processing at Post Office Facilities . . . 171
542.21 Examination of List of Contents . . . 171
542.22 Amount of Mailing Authorized by License . . . 172
550 Dried Whole Eggs . . . 172
551 Description . . . 172
552 Charges . . . 172

553 How to Mail . . . 172
553.1 Preparation by Sender . . . 172
553.11 Marking . . . 172
553.12 Certificate of Mailing Dried Whole Eggs . . . 172
553.2 Processing in Office of Mailing . . . 173
553.21 Postage . . . 173
553.22 Signature of Postmaster . . . 173
560 (Reserved) . . . 173
570 Consular and Commercial Invoices . . . 173
580 Drawback Arrangement . . . 174
581 Description . . . 174
582 Processing Drawback Claims . . . 174
582.1 Forms Required . . . 174
582.11 List of Forms . . . 174
582.12 Where to Obtain the Forms . . . 174
582.2 Preparation by Senders . . . 174
582.21 Claiming Drawback . . . 174
582.22 Waiver of the Right to Withdraw the Package . . . 174
582.3 Processing by Postmaster . . . 175
582.31 Postmaster's Certification . . . 175
582.32 Disposal of Forms . . . 175
590 Exporting Wildlife and Protected Plants . . . 175
591 Special Requirements for Wildlife and Certain Plant Exports . . . 175
592 Declaration Requirements . . . 176
592.1 Declaration of Wildlife Exports . . . 176
592.2 Declaration of Scientific Specimens or Parts . . . 176
592.3 Declaration of Plant Exports . . . 176
593 Export Licenses and Inspection Requirements for Commercial Wildlife Exports . . . 177
594 Marking Requirements for Wildlife Exports . . . 177
595 Permit Requirements for Wildlife and Plant Exports . . . 177
596 Obtaining and Using Permits for Wildlife and Protected Plant Exports . . . 177
596.1 Export Permits . . . 177
596.2 CITES Permit . . . 178
596.3 Export of Migratory Birds . . . 178
597 How to Obtain Additional Information . . . 178
598 Wildlife Inspection Offices . . . 178

6 Special Programs . . . 179
610 Postal Qualified Wholesaler Program . . . 179
611 Description . . . 179
612 Pricing . . . 179

613 Qualifying as a Wholesaler 179
613.1 Letter of Request 179
613.2 Criteria 180
613.3 Disqualification 181
614 Benefits 181
614.1 Qualified List 181
614.2 Preapproved Advertising 181
614.3 Right of First Refusal 182
615 Length of Qualification 182
615.1 Approval Period 182
615.2 Disqualification 182

7 Treatment of Inbound Mail 183
710 U.S. Customs Information 183
711 Customs Examination of Mail Believed to Contain Dutiable or Prohibited Articles 183
711.1 What Is Subject to Examination. 183
711.2 Treatment of Mail Believed to Contain Dutiable or Prohibited Articles 183
711.21 Treatment at Exchange Offices 183
711.22 Treatment at Distribution Offices 184
711.23 Priority Treatment of Airmail 184
711.3 Examination of Registered Mail and Sealed Letters 184
711.4 Extraction of Samples for Advisory Information 184
711.5 Treatment of Mail Following Customs Examination 185
711.51 Repacking After Customs Examination 185
711.52 Identification of Dutiable/Nondutiable Articles 185
711.6 Handling Subsequent to Customs Inspection 185
711.61 Postal Service Handling Procedures 185
711.62 U.S. Customs Service Locations 185
712 Customs Clearance and Delivery Fee 186
712.1 Description. 186
712.11 Collecting Postal Service Fees 186
712.12 Collecting Postal Service Fee for Each Package 186
712.13 Accounting for the Postal Service Fee 187
712.2 Articles Exempted From Postal Service Fee 187
712.3 Amount of Postal Service Fee 187
712.4 Postal Service Fee Not Refundable 187
712.5 Customs Duties and Customs Fee Not Exempt 187
713 Treatment of DutiMable Mail at Delivery Office 187
713.1 Detection and Dispatch of Dutiable Mail 187
713.11 Detecting Dutiable Items 187
713.12 Dispatch to Delivery Units 187

713.2 Delivery of Dutiable Mail . . . 188
713.21 Delivery Methods . . . 188
713.22 Delivery Procedures . . . 188
713.23 Addressee Protests Duty Charged . . . 189
713.3 Forwarding or Returning Dutiable Mail . . . 190
713.31 Forwarding Dutiable Mail Within the U.S. . . . 190
713.32 Forwarding Dutiable Mail to Another Country . . . 191
713.33 Returning Dutiable Mail to Sender . . . 191
713.34 Forwarding or Returning Dutiable Mail by Stations and Branches . . . 191
713.4 Payment of Duty . . . 191
713.41 Duty Rate Information . . . 191
713.42 Prepayment of Customs Duty Abroad . . . 192
713.43 Registration of Items to Be Returned to the United States . . . 192
713.44 Return of Audio-Visual Materials . . . 193
713.45 Assessment of Duty in Foreign Countries . . . 193
713.46 Recording and Reporting Collections . . . 193
713.5 Treatment of Uncollected Items . . . 193
713.51 Disposal of Uncollected Items . . . 193
713.52 Reporting of Uncollected Items . . . 193
713.53 Past-Due Entries . . . 194
713.54 Detached Customs Mail Entries . . . 194
713.6 Refund of Customs Duty . . . 194
713.61 Action by Postmaster . . . 194
713.62 Refunds by Customs Service . . . 195
720 Plant and Animal Quarantine Inspection . . . 196
721 What Is Subject to Inspection . . . 196
722 Segregation and Handling . . . 196
722.1 Treatment of Packages Labeled for Inspection . . . 196
722.11 Dispatch of Packages . . . 196
722.12 Marking . . . 196
722.2 Treatment of Packages Exempt From Inspection . . . 196
722.3 Treatment of Unauthorized Importations . . . 196
722.4 Packages Containing Prohibited Material . . . 196
723 Agriculture Inspection Stations and Offices . . . 197
730 Shortpaid Mail to the United States . . . 197
731 Computation of Postage Due . . . 197
732 Shortpaid Letters and Cards From Canada . . . 198
733 Shortpaid Items Bearing U.S. Postage . . . 198
740 Irregular Mail . . . 198
741 Invalid Foreign Postage . . . 198
742 Stamps Not Affixed . . . 199
742.1 Marking . . . 199
742.2 Parcels Without Postage Stamps . . . 199

743 Parcels Addressed Through Banks or Other Organizations 199
743.1 Notification of Arrival 199
743.2 Filing Authorization 199
744 Foreign Dispatch Notes. 199
744.1 Delivery Instructions 199
744.2 Undeliverable Parcels 200
744.3 Dispatch Notes Not Associated With Parcels 200
750 Extra Services 200
751 Insured Parcels 200
751.1 Identification 200
751.11 Evidence of Insurance 200
751.12 List of Insurance Endorsements. 200
751.2 Delivery 200
751.3 Indemnity Claims and Payments 200
752 Registered Mail 200
752.1 Identification 200
752.11 Evidence of Registration. 200
752.12 List of Registry Endorsements 201
752.13 Treatment of Registered Items. 201
752.14 Treated as Ordinary Mail 201
752.2 Treatment by Office of Delivery 201
752.21 Delivery. 201
752.22 Mail Unaccounted for After Assignment for Delivery 201
752.23 Indemnity Claims and Payments 201
753 Return Receipt 201
753.1 Completion of Return Receipt Form 201
753.2 Foreign Receipt Form Missing. 202
754 Restricted Delivery 202
754.1 Inbound Registered Mail 202
754.2 Failed Delivery Attempt 202
760 Forwarding 202
761 General Procedures 202
761.1 Items Addressed to Foreign Countries 202
761.2 Forwarding to a Third Country. 202
761.3 Endorsement Not to Forward 202
761.4 Scanning Procedures 202
762 Mail of Domestic Origin. 203
762.1 Addressee Moved to Another Country 203
762.11 Letters and Postcards 203
762.12 Mail Other Than Letters and Postcards 203
762.2 Undeliverable Domestic Mail Bearing U.S. Postage and a Foreign Return Address 203

763 Items Mailed Aboard Ships (Paquebot) 204
763.1 General 204
763.2 Mail Forwarded by Air 204
763.3 Mail Posted on a U.S. Ship 204
763.4 Forwarding Ship Passenger and Crew Mail 204
763.41 Items That Do Not Contain Merchandise 204
763.42 Accepting Employee's Responsibility 205
764 Mail of Foreign Origin 205
764.1 Forwarding Within the United States 205
764.11 Mail Other Than Periodicals and Parcels 205
764.12 Periodicals 205
764.13 Parcels 206
764.2 Forwarding to Another Country 206
764.21 Mail Other than Periodicals and Parcels 206
764.22 Periodicals 206
764.23 Parcels 206
764.24 Customs Entry Forms 207
764.3 Backstamping 207
765 Directory Service 207
766 Retention Period 207
766.1 General Procedure 207
766.2 Exceptions 207
766.21 Refused, Undeliverable, or Unforwardable Item 207
766.22 Request for Return 208
766.23 Items Conditionally Refused by Addressee 208
766.24 Items Returned From Customs Custody 208
766.25 Request for Delivery to Alternate Addressee 208
770 Undeliverable Mail 208
771 Mail of Domestic Origin 208
771.1 General Procedure 208
771.2 Exceptions 208
771.3 Endorsements 209
771.4 Remailing of Returned Mail 209
771.5 Return Charges for First-Class Mail International 209
771.51 General Procedure 209
771.52 Exceptions 209
771.6 Return Charges for Priority Mail International 210
771.7 Handling of Returned Parcels 210
771.71 Refused by Sender 210
771.72 Sender Has Moved to Another U.S. Address 210
771.73 Sender Has Moved to Another Country 210

772 Mail of Foreign Origin . . . 210
772.1 Marking . . . 210
772.11 Reason for Nondelivery . . . 210
772.12 Postmarking . . . 211
772.13 Address . . . 211
772.14 Method of Return . . . 211
772.15 Abandoned Parcel . . . 211
772.2 Dutiable Mail . . . 211
772.3 Disposal . . . 211
772.31 General Procedure . . . 211
772.32 Exceptions . . . 211
780 Items Mailed Abroad by or on Behalf of Senders in the United States . . . 212
781 Payment Required . . . 212
781.1 Postage Payment Required . . . 212
781.2 Handling Charges . . . 212
782 Definition of Terms . . . 212
782.1 Resident . . . 212
782.2 By or on Behalf . . . 212
782.3 Place of Business . . . 213
782.4 Agent . . . 213
783 Advance Payment Required . . . 213
783.1 Sample Mailpiece . . . 213
783.2 Headquarters Notification . . . 213
784 Advance Payment Not Made . . . 213
784.1 Return or Disposal of Items . . . 213
784.2 Mailings Without Advance Payment . . . 214
785 Report of Mailings . . . 214

8 (Reserved) . . . 215

9 Inquiries, Indemnities, and Refunds . . . 217
910 Reports Encouraged . . . 217
920 Inquiries and Claims . . . 217
921 Inquiries . . . 217
921.1 Definition . . . 217
921.2 Initiating an Inquiry . . . 217
921.3 How to Initiate . . . 218
921.4 Inquiry Process . . . 218
921.5 General Procedures . . . 218
921.51 Nondelivery . . . 218
921.52 Return Receipts Improperly Completed or Not Received . . . 219
921.53 Express Mail International Items, Registered Mail Items, and Insured and Ordinary Parcels With Damaged or Missing Contents . . . 219
921.54 Wrapper Found Without Contents . . . 219

922 Claims . . . 219
922.1 General Description . . . 219
922.2 Filing a Claim . . . 219
922.3 Claims Process . . . 220
922.31 Evidence of Indemnity Coverage . . . 220
922.32 Evidence of Value . . . 220
922.4 Processing Claims for Damaged or Missing Contents . . . 221
922.41 Postal Service . . . 221
923 Disposition of Damaged Mail . . . 221
930 Indemnity Payments . . . 222
931 Adjudication and Approval . . . 222
931.1 When to Be Instituted . . . 222
931.2 International Claims . . . 222
931.21 Indemnity Claims for International Registered Mail, Insured Parcels, and Ordinary Parcels of U.S. and Foreign Origin . . . 222
931.22 Country of Origin Pays Indemnity . . . 222
931.3 Appeals . . . 223
931.31 Appealing a Claims Decision . . . 223
931.32 Final Postal Service Decision of Claims . . . 223
932 General Exceptions To Payment — Registered Mail, Priority Mail International Insured Parcels, and Priority Mail International Ordinary Parcels . . . 223
933 Payments for Priority Mail International Insured Parcels and Priority Mail International Ordinary Parcels . . . 224
933.1 General Provisions . . . 224
933.11 Insured Parcels . . . 224
933.12 Indemnity Will Not Be Paid . . . 224
933.13 Ordinary Priority Mail International Parcels — Indemnity Limitations . . . 225
933.14 Ordinary Priority Mail International Parcels — Exceptions to Indemnity . . . 225
933.2 Special Provisions . . . 226
934 Payments for Registered Mail . . . 226
934.1 General Provisions . . . 226
934.11 Indemnity Paid by Country of Origin . . . 226
934.12 Parcels Erroneously Accepted as Registered Mail . . . 226
934.13 Indemnity Will Not Be Paid . . . 226
934.14 Indemnity Paid by Country of Destination . . . 226
934.2 Special Provisions . . . 226
935 Payments for Express Mail International . . . 226
935.1 When Authorized . . . 226
935.2 When Prohibited . . . 227
940 Postage Refunds . . . 227
941 Postage Refunds for First-Class Mail International and Priority Mail International . . . 227
941.1 General . . . 227
941.2 Applications by Senders . . . 227

941.3 Processing Refund Applications 227
941.31 Items Originating in United States 227
941.32 Items Originating in a Country Other Than the United States 228
942 Postage Refunds for Express Mail International Items 228
942.1 Who May File 228
942.2 Conditions 228
942.21 Express Mail International Refunds 228
942.22 Express Mail International With Guarantee Refunds 228
942.3 Applications by Senders 229
942.31 Express Mail International 229
942.32 Express Mail International With Guarantee 229
942.4 Processing of Refund 229
942.5 Unallowable Refunds — Express Mail International With No Service Guarantee 229
942.51 Postage Refunds — Express Mail International 229
942.52 Unallowable Refunds — Express Mail International With Guarantee Service 230
942.53 Consequential Damages 230
943 Processing Refund Applications 230
943.1 Items Originating in the United States 230
943.2 Items Originating in a Country Other Than the United States 230

Index of Countries and Localities 231

Country Price Groups and Weight Limits 237

Individual Country Listings 243

List of Exhibits 697

Forms Index 699

Index 701

1 International Mail Services

110 General Information

111 Scope

This manual sets forth the conditions and procedures for the preparation and treatment of mail sent from the United States to other countries and the treatment of mail received from other countries. Its counterpart in the domestic mail service is the *Mailing Standards of the United States Postal Service,* Domestic Mail Manual (DMM®). Cross-references to the DMM are provided wherever domestic conditions and procedures apply to the preparation or treatment of international mail.

112 Mailer Responsibility

Regardless of any statement contained in this manual or the statements of any employee of the United States Postal Service®, the burden rests with the mailer to ensure that he or she has complied with the prescribed laws and regulations governing domestic and international mail, both those of the United States and those of the destination country. Full responsibility rests with the mailer to comply with all postal and nonpostal laws and regulations regarding the mailing of dangerous goods. Anyone who mails, or causes to be mailed, nonmailable or improperly packaged dangerous goods can be subject to legal penalties, including but not limited to those specified in Title 18 of the United States Code (18 U.S.C.).

113 Individual Country Listings

Individual Country Listings (ICLs) provide information about conditions of mailing, postage prices, and extra services for each country. ICLs are arranged alphabetically. Most subtitles are followed by a chapter citation in parentheses.

114 Availability

Customers may access this manual online at *http://pe.usps.gov*. A printed copy may be purchased from:

US GOVERNMENT PRINTING OFFICE
PO BOX 979050
ST LOUIS, MO 63197-9000

115 Official Correspondence

115.1 Communicating With Headquarters

115.11 Operations

Questions regarding the proper classification, postal prices and fees, preparation requirements, claims and inquiries, extra services, mailability, or any other classification aspect of international mail should be directed to local Postal Service officials. Regulatory matters relating to international mail should be directed to the Pricing and Classification Service Center (PCSC) at the following address:

MANAGER PRICING AND CLASSIFICATION SERVICE CENTER
US POSTAL SERVICE
90 CHURCH ST STE 3100
NEW YORK NY 10007-2951

115.12 Policy and Representation

Correspondence concerning the following should be addressed to:

DIRECTOR INTERNATIONAL POSTAL AFFAIRS
US POSTAL SERVICE
1735 N LYNN ST STE 6043
ARLINGTON VA 22209-6111

a. Policy matters relating to international mail and international postal affairs.

b. Negotiation and interpretation of postal agreements.

c. Communications of a nonroutine nature from foreign postal officials.

d. Postal Service representation at international postal meetings.

e. Postal Service representation at meetings with other federal departments and agencies relating to international postal affairs.

f. Visits by foreign postal officials.

115.13 Transportation and Distribution

Correspondence concerning the transportation of international civil and military mail, including the following, should be addressed to:

MANAGER INTERNATIONAL NETWORK OPERATIONS
US POSTAL SERVICE
475 L'ENFANT PLZ SW RM 6801
WASHINGTON DC 20260-6801

a. Containerization and plant loads.

b. Conveyance rates.

c. Designation of U.S. exchange offices.

d. Documentation.

e. Internal air conveyance, terminal, and transit charges.

f. Mode of transport.

g. Related forms and reports.

h. Routing.

i. Schedules and performance of U.S. and foreign flag carriers.

j. Distribution procedures and schemes.

115.14 Investigations

Correspondence relating to investigation of losses, depredations (robberies or missing contents), and security of international mail should be addressed to:

CHIEF POSTAL INSPECTOR
INSPECTION SERVICE
US POSTAL SERVICE
475 L'ENFANT PLZ SW
WASHINGTON DC 20260-2100

115.15 International Money Orders

Correspondence relating to international money orders, including operational procedures, accounting, cashing, and issuing, should be addressed to:

INTERNATIONAL MONEY ORDER SECTION
ACCOUNTING SERVICE CENTER
US POSTAL SERVICE
PO BOX 14964
ST LOUIS MO 63182-9421

115.2 Correspondence With Foreign Postal Authorities

115.21 Correspondence Permitted

Correspondence is permitted between foreign postal authorities and Postal Service inspectors-in-charge and the postmasters acting under the instructions for processing inquiries described in 920. U.S. exchange offices may correspond with their foreign counterparts only through bulletins of verification and exchanges of documentation.

115.22 Correspondence Not Permitted

In all other cases, postmasters, area offices, and other field units of the Postal Service must *not* correspond directly with postal officials in other countries, but must refer inquiries from those officials to Headquarters for attention. (See 115.1 for referral points for particular subjects.)

115.3 Correspondence With Foreign Individuals

115.31 Correspondence Permitted

Postmasters, area offices, and other field units of the Postal Service may reply directly to inquiries and engage in other necessary correspondence with individuals and firms in other countries.

115.32 Customer's Address

A customer's address may not be given out without the customer's consent.

120 Preparation for Mailing

121 Packaging — Sender's Responsibility

It is the responsibility of the sender to prepare items and to address them clearly and correctly. In preparing items for mailing, the sender must (1) use strong envelopes or durable packaging material to prevent deterioration or degradation, and (2) consider the nature of the articles being mailed and the distance they must travel to reach the addressee. (See DMM 601 for detailed instructions.)

122 Addressing

122.1 Destination Address

a. At least the entire right half of the address side of the envelope, package, or card should be reserved for the destination address, postage, labels, and postal notations.

b. Addresses must appear in ink or be typewritten. Pencil is unacceptable.

c. The name and address of addressee must appear legibly with roman letters and arabic numbers, all placed lengthwise on one side of the item. For parcels, addresses should also appear on a separate slip enclosed in the parcel.

d. Addresses in Russian, Greek, Arabic, Hebrew, Cyrillic, Japanese, or Chinese characters must bear an interline translation in English of the names of the post office and country of destination. If the English translation is not known, the foreign language words must appear in roman characters (print or script). See 292.41 and 293.41 for an *optional* addressing procedure that applies only to direct country sacks of International Priority Airmail (IPA) or International Surface Air Lift (ISAL) mail, respectively.

e. Mail may *not* be addressed to a person in one country "in care of" a person in another country.

f. The name of the sender and/or addressee may *not* be in initials except where they are an adopted trade name.

g. Mail may *not* be addressed to *Boxholder* or *Householder.*

h. The following exceptional form of address, in French or a language known in the country of destination, may appear on printed matter: the addressee's name or *Occupant*.

Example: Mr. Thomas Clark or Occupant

i. The house number and street address or box number must appear when mail is addressed to towns or cities.

j. The address of items sent to General Delivery must indicate the name of the addressee and the country of destination. The use of initials, figures, simple given names, or fictitious names is not permitted on articles addressed for general delivery.

k. All lines of the delivery address *should* appear in all capital letters. The city destination *must* appear in capital letters together with the correct post code number or delivery zone number, if any. The last line of the address must show only the country name, written in full (no abbreviations) and in capital letters. If possible, the address should have no more than five lines. For example:

MR THOMAS CLARK 117 RUSSELL DRIVE LONDON WIP 6HQ GREAT BRITAIN	MS C P APPLE APARTADO 3068 46807 PUERTO VALLARTA JALISCO MEXICO

Exception: To Canada, there must be two spaces between the province abbreviation and the postal code, as shown below between “ON” and “KIA 0B1”:

MS HELEN SAUNDERS
1010 CLEAR STREET
OTTAWA ON K1A 0B1
CANADA

122.2 Return Address

122.21 General

Due to heightened security, many foreign postal administrations require complete sender and addressee information in roman letters and Arabic numerals on postal items. All outbound international mail should bear a complete return address of the sender. Only one return address may be used, and it must be located so that it does not affect either the clarity of the address of destination or the application of service labels and notations (postmarks, etc.).

122.22 Required Use of Return Address

In the case of bulk mailings, all mailpieces *must* bear a U.S.-origin return address visible on the outside of the mailpiece. For the purpose of this section, a “bulk mailing” is any IPA or ISAL mailing, or any other mailing paid with an advance deposit account and presented to the U.S. Postal Service for acceptance.

122.23 Return Address Elements and Placement

For U.S.-origin mailpieces, minimum elements must include a complete street number and name (or Post Office box number), city name, state name (or authorized two-letter state abbreviation), and the correct 5-digit ZIP Code or ZIP+4 code. The return address should appear in the upper left corner of the address side of the envelope, card, flat, or package. It is also recommended that U.S.-origin mailpieces include “United States” on the last line of the return address.

Unregistered items bearing a return address in another country are accepted only at the sender’s risk. Items authorized to bear a return address in another country must include the proper return address elements (including the country name) to ensure the proper return of the mailpiece. The return address should appear in the upper left corner of the address side of the envelope, card, flat, or package.

123 Customs Forms and Online Shipping Labels

123.1 General

Only two customs declaration forms are used, as required under 123.6, for international mail: PS Form 2976, *Customs Declaration CN 22 — Sender's Declaration,* and PS Form 2976-A, *Customs Declaration and Dispatch Note — CP 72.* PS Form 2976-E, *Customs Declaration Envelope — CP 91,* is used as a carriage document for PS Form 2976-A.

Note: The current edition of PS Form 2976 is December 2009; the current edition of PS Form 2976-A is May 2009; the current edition of PS Form 2976-E is September 2006. Except as provided in 123.3 and 123.5, mailers must present at the time of mailing a fully completed sender's declaration (the Post Office™ copy of PS Form 2976 or 2976-A), which specifies both the sender's name and address and the addressee's name and address.

123.2 Availability

Customs declaration forms are available without charge at Post Office facilities. Upon request, mailers may receive a reasonable supply for mail preparation. Customers may also order supplies of the customs forms from The Postal Store at *http://shop.usps.com;* search on the words "customs forms." Customs declaration forms are also available through an online customs form application at *usps.com/webtools*.

123.3 Privately Printed Forms

If authorized, mailers may privately print PS Forms 2976 and 2976-A. Privately printed forms must be identical in size, design, and color to the Postal Service™ forms, and each form must contain a unique Code U 128 barcode symbology that can be read by Postal Service equipment. Mailers may obtain form specifications from the following address:

BARCODE CERTIFICATION
NATIONAL CUSTOMER SUPPORT CENTER
UNITED STATES POSTAL SERVICE
6060 PRIMACY PKWY STE 201
MEMPHIS TN 38188-0001

Mailers can also obtain form specifications by calling the NCSC at 800-238-3150 — select option 5 for barcode certification — or online at *http://ribbs.usps.gov;* click on "Site Index" and then on "International Customs Forms."

Upon receipt of the request, the NCSC will send mailers an application and specifications for preparing PS Forms 2976 and/or 2976-A. The application clearly explains the process necessary for authorization. When authorized by the NCSC, a mailer may omit printing the Post Office copy of PS Forms 2976 and/or 2976-A by submitting an authorized manifest of the items. The manifest must be typewritten, legibly handwritten, or computer-generated, and it must contain the following information:

a. The sender's name and address (appearing once on the manifest).

b. The edition date of the privately printed form (appearing once on the manifest).

c. The same certification statement that is printed on the Postal Service PS Form 2976 or 2976-A, and the mailer's signature and date (appearing once on the manifest).

d. For each item, the foreign recipient's name and delivery address.

e. For each item, the corresponding human-readable characters that match the barcode printed on the form.

123.4 Nonpostal Forms

123.41 Nonpostal Export Regulations

Certain items must bear one or more of the forms required by the nonpostal export regulations described in chapter 5.

123.42 Commercial Invoices

A commercial invoice is a bill for goods from the seller to the buyer. A commercial invoice must be completed where required and must contain the following basic information:

a. Seller's complete contact information.

b. Receiver's complete contact information.

c. Consignee's complete contact information (if it is different from the buyer's).

d. Country of origin.

e. Destination country.

f. Reason for export.

g. Total commercial value of the item(s) shipped.

h. Sales and payment terms (if any).

i. Currency of sale.

j. Full quantities and description of the merchandise.

k. A statement certifying that the invoice is correct.

123.5 Place of Mailing

Mailpieces bearing customs declarations have specific deposit requirements based on mail category, shape, and weight. Refer to the specific IMM part below for determination:

a. Global Express Guaranteed mailpieces — see 215.

b. Express Mail International mailpieces — see 225.

c. Priority Mail International mailpieces — see 235.

d. First-Class Mail International mailpieces — see 245.

123.6 Required Usage

123.61 Conditions

The following conditions apply to customs forms for international mail items:

a. Except as provided in 123.62, mailers must use PS Form 2976 or PS Form 2976-A as described in Exhibit 123.61.

b. The surface area of the address side of the item to be mailed must be large enough to contain completely the applicable customs form, postage, and any applicable markings, endorsements, and extra service labels.

c. Regardless of any listing in Exhibit 123.61, items containing articles that require an export license (see 532) must always bear PS Form 2976-A.

Exhibit 123.61
Customs Declaration Form Usage by Mail Category

Type of Item	Declared Value, Weight, or Physical Characteristic	Required PS Form	Comment
Global Express Guaranteed Items			
All items.	All values	6182	PS Form 6182, *Commercial Invoice,* is required for certain commodities and destinations. For determination, see Publication 141, *Global Express Guaranteed Service Guide*.
Express Mail International Items			
All items.	All values	2976 or 2976-A	Required customs forms and endorsements vary by country and are specified in the Individual Country Listings.
Priority Mail International Items Except Flat Rate Envelopes and Small Flat Rate Priced Boxes			
All Priority Mail International items except Flat Rate Envelopes and Small Flat Rate Priced Boxes.	All values	2976-A	Except for Priority Mail International Flat Rate Envelopes and Small Flat Rate Priced Boxes, all items mailed in USPS-produced Priority Mail International packaging or any other container bearing a Priority Mail sticker or marked with the words "Priority Mail" are considered to be within the scope of this requirement.
Priority Mail International Flat Rate Envelopes (Maximum weight limit: 4 pounds)			
All Priority Mail International Flat Rate Envelopes containing only documents except for the known mailer exemption described in the entry below.	Under 16 ounces, no more than 3/4 inch thick, and uniformly thick	None*	See 123.63 for additional information concerning "documents."
	16 ounces or more, more than 3/4 inch thick, or not uniformly thick	2976	
All Priority Mail International Flat Rate Envelopes containing only documents that are entered by a known mailer as defined in 123.62.	No more than 3/4 inch thick and uniformly thick	None*	See 123.63 for additional information concerning "documents."
	More than 3/4 inch thick or not uniformly thick	2976	
All Priority Mail International Flat Rate Envelopes containing potentially dutiable contents, regardless of weight.	$400 or less	2976	Merchandise is permitted unless prohibited by the destination country.
	Over $400	Prohibited	Items over $400 must be mailed using Global Express Guaranteed service, Express Mail International service, or Priority Mail International service (other than Flat Rate Envelopes or Small Flat Rate Priced Boxes).

Exhibit 123.61
Customs Declaration Form Usage by Mail Category

Type of Item	Declared Value, Weight, or Physical Characteristic	Required PS Form	Comment
Priority Mail International Small Flat Rate Priced Boxes (Maximum weight limit: 4 pounds)			
All Priority Mail International Small Flat Rate Priced Boxes, regardless of contents.	$400 or less	2976	Merchandise is permitted unless prohibited by the destination country.
	Over $400	Prohibited	Items over $400 must be mailed using Global Express Guaranteed service, Express Mail International service, or Priority Mail International service (other than Flat Rate Envelopes or Small Flat Rate Priced Boxes.
First-Class Mail International Letters and Large Envelopes (Flats), Including International Priority Airmail (IPA) Items and International Surface Air Lift (ISAL) Items (Maximum weight limit: 4 pounds)			
All letter-size and flat-size items, as defined in 243, containing only documents except for the known mailer exemption described in the entry below.	Under 16 ounces	None*	See 123.63 for additional information concerning "documents."
	16 ounces or more	2976	
All letter-size and flat-size items, as defined in 243, containing only documents that are entered by a known mailer as defined in 123.62.		None*	See 123.63 for additional information concerning "documents."
All items containing potentially dutiable contents, regardless of weight.	$400 or less	2976	Merchandise is permitted unless prohibited by the destination country.
	Over $400	Prohibited	Items over $400 must be mailed using Global Express Guaranteed service, Express Mail International service, or Priority Mail International service (other than Flat Rate Envelopes or Small Flat Rate Priced Boxes).
First-Class Mail International Packages (Small Packets), Including IPA Items and ISAL Items (Maximum weight limit: 4 pounds)			
All First-Class Mail International packages (small packets), as defined in 243.4, regardless of contents.	$400 or less	2976	Merchandise is permitted unless prohibited by the destination country.
	Over $400	Prohibited	Items over $400 must be mailed using Global Express Guaranteed service, Express Mail International service, or Priority Mail International service (other than Flat Rate Envelopes or Small Flat Rate Priced Boxes).

Exhibit 123.61
Customs Declaration Form Usage by Mail Category

Type of Item	Declared Value, Weight, or Physical Characteristic	Required PS Form	Comment
Free Matter for the Blind or Other Physically Handicapped Persons			
All items.	Follow above requirements for relevant mail category, as appropriate.	Follow above requirements for relevant mail category, as appropriate.	Free matter for the blind or other physically handicapped persons requires a customs form for all articles.
M-bags (Airmail, IPA Service, and ISAL Service)			
All M-bags.	$400 or less	2976	A fully completed PS Form 2976 must be affixed to PS Tag 158, M-bag Addressee Tag.
	Over $400	Prohibited	

* *Qualifying items must meet the physical characteristics in 241.235. For example, the following items do not meet this requirement and must bear a PS Form 2976: 1) Priority Mail International Flat Rate Envelopes that are not uniformly thick; 2) First-Class Mail International items claimed at the package price; and 3) IPA and ISAL packages (small packets) containing only documents.*

123.62 Known Mailers

123.621 Overview

A "known mailer" may be exempt from the customs form requirement that would otherwise apply to letter-size mailpieces (weighing up to 3.5 ounces) and flat-size mailpieces (weighing 16 ounces or more) as defined in 241.2. A "known mailer" must meet one of the definitions in 123.622 and must meet the conditions in 123.623.

123.622 Definition

A "known mailer" must meet one of the following definitions:

a. A federal, state, or local government agency whose mail is regarded as Official Mail.

b. A contractor who sends out prepaid mail on behalf of a military service, provided the mail is endorsed "Contents for Official Use — Exempt from Customs Requirements."

c. A business mailer who enters volume mailings through a business mail entry unit (BMEU) or other bulk mail acceptance location, completes a postage statement at the time of entry, pays postage through an advance deposit account, and uses a permit imprint for postage payment. For this purpose, the categories of mail that qualify are as follows:

(1) Priority Mail International Flat Rate Envelopes.

(2) First-Class Mail International service.

(3) International Priority Airmail (IPA) service.

(4) International Surface Air Lift (ISAL) service.

123.623 Conditions

The following conditions apply to "known mailers":

a. The mailpieces must contain no merchandise items or other contents that are potentially dutiable.

b. The mailpieces must be letter-size or flat-size as defined in 241.2.

c. If the mailpieces are mailed with a postage statement, the mailer must certify on the postage statement that the mailpieces contain no dangerous materials that are prohibited by postal regulations.

d. The import regulations of the destination country must allow individual mailpieces without a customs form affixed.

e. For IPA and ISAL mailings, the mailer must pay with a permit imprint or with a combination postage method (meter postage affixed to the piece and additional postage by permit imprint). IPA and ISAL mailpieces that are paid for by postage solely with a meter do not qualify for the “known mailer” exemption.

123.63 Documents and Merchandise

In Exhibit 123.61, the “Type of Item” column has several references to “documents.” For this purpose, “documents” refers only to printed documents, not to electronic storage media or devices such as CDs, DVDs, or flash drives. Examples of documents include the following:

a. Audit and business records.

b. Personal correspondence.

c. Circulars.

d. Pamphlets.

e. Advertisements.

f. Written instruments not intended to be resold.

g. Money orders, checks, and similar items that cannot be negotiated or converted into cash without forgery.

Examples of items that do not qualify as documents — rather, they are considered merchandise, so the sender is required to apply a customs declaration form and declare a value — include the following:

a. CDs, DVDs, flash drives, video and cassette tapes, and other electronic storage media — regardless if they are blank or if they contain electronic documents or other prerecorded media.

b. Artwork.

c. Collector or antique document items.

d. Books.

e. Periodicals.

f. Printed music.

g. Printed educational or test material.

h. Player piano rolls.

i. Engineering drawings.

j. Blueprints.

k. Film.

l. Negatives.

m. X-rays.

n. Separation negatives.

o. Photographs.

123.64 Additional Security Controls

When the chief postal inspector determines that a unique, credible threat exists, the Postal Service may require a mailer to provide photo identification at the time of mailing. The signature on the identification must match the signature on the customs declaration form.

123.7 Completing Customs Forms

123.71 PS Form 2976, Customs Declaration CN 22 — Sender's Declaration

123.711 Sender's Preparation of PS Form 2976

A sender must complete PS Form 2976, *Customs Declaration CN 22 — Sender's Declaration*. See Exhibit 123.711 for a copy of PS Form 2976.

a. Check the appropriate box to indicate whether the package contains a gift, documents, commercial samples, or other items.

b. In block (1), provide a detailed description, in English, of each article and the quantity for each article. General descriptions such as "food," "medicine," "gifts," or "clothing" are not acceptable. In addition to the English text, a translation in another language is permitted.

c. In block (2), enter the quantity of each article.

d. In block (3), enter the weight of each article in pounds and ounces.

e. In block (4), declare the value of each article in U.S. dollars.

Note: The sender may declare that the contents have no value. However, declaring that the contents have no value does not exempt an item from customs examination or charges in the destination country.

f. The sender must enter the actual value of an item for registered items in a consistent manner on PS Forms 3806 and 2976 — i.e., the value entered must be identical. Items on which identical values are not declared will be refused. (See 334.12.)

g. In block (5) — which is only for commercial items (i.e., any goods exported/imported in the course of a business transaction whether or not they are sold for money or exchanged) — enter, if known, the HS tariff number (6 digits), which must be based on the Harmonized Commodity Description and Coding System developed by the World Customs organization, and the country of origin, which is the country where the goods originated (i.e., where they were produced, manufactured, or assembled).

h. In block (6), enter the total weight and the total value of the items.

i. In block (7), check "NOEEI § 30.37(a)" or "NOEEI § 30.37(h)," depending on the applicable Exemption and Exclusion Legend.

j. In block (8), sign and date in the blocks indicated on the left side and the right side of the form. The sender's signature certifies that all entries are correct and that the item contains no dangerous article prohibited by postal or customs regulations.

k. Enter the sender's full name and address and the addressee's full name and address in the blocks indicated.

l. Affix the form to the address side of the item and present the item for mailing.

Exhibit 123.711
PS Form 2976, Customs Declaration CN 22 — Sender's Declaration (Sender's Instructions and Copy 3)

Customs Declaration CN 22 – Sender's Declaration

Instructions for Completing Customs Declaration

LC12345678XUS

Please retain this copy and the detached customer copy from page 3 for your records. You will need the information contained on these pages if you contact us about the article(s) you mailed.

A PS Form 2976, *Customs Declaration CN22 – Sender's Declaration*, must be used on all First-Class Mail International® package-size items (small packets), the Priority Mail International® Small Flat Rate Box, M-bags, and certain Express Mail International® items. Refer to the *International Mail Manual* at *pe.usps.com* for additional information.

Also use this form on a First-Class Mail International mailpiece or the Priority Mail International Flat Rate Envelope if ANY of the following applies:

- The mailpiece weighs 16 ounces or more (4 pound maximum weight limit);
- The mailpiece exceeds 3/4 inch thick; or
- The mailpiece contains dutiable contents.

NOTE: Priority Mail International Flat Rate Envelopes and First-Class Mail International large envelopes (flats) containing only documents, weighing under 16 ounces, and meeting the flat-size characteristics do not require a PS Form 2976.

Do not use this form for mailpieces: 1) Containing items valued over $400; 2) requiring an export license; 3) containing goods (non-documents) destined to Iran or Syria; or 4) containing goods destined to Cuba, North Korea, or Sudan, other than gift parcels or humanitarian donations as defined by 15 CFR § 740.12.

For APO, FPO and DPO destinations, PS Form 2976 may be used when sending certain items (all domestic mail classes). Refer to the current "Overseas Military/Diplomatic Mail" section of the latest *Postal Bulletin* at *usps.com* for additional information.

Your goods may be subject to restrictions. It is the responsibility of the mailer to inquire about and to abide by any import and export regulations and restrictions (e.g., quarantine, pharmaceutical, etc.). This form must be properly completed.

FROM (Sender information) and TO (Addressee information) section: Sender and addressee's full name and full address must be entered in the blocks provided.

Additional instructions and Privacy Statement continued on reverse of this page.

PS Form **2976,** December 2009 **Sender's Instructions**

Sample

(1) Enter a detailed description of each article – e.g., "men's cotton shirts." General descriptions – e.g., "samples", "food products" or "toiletries" – are not permitted. **(2)**, **(3)** and **(4)** Enter the quantity, net weight (pounds and ounces) and value of each article. **(5)** For commercial items only. If known, the 6-digit Harmonized System (HS) number must be based on the Harmonized Commodity Description Coding System developed by the World Customs Organization. **(6)** Enter the total quantity, weight and value of all articles.

(7) Exemption and Exclusion Legend. In order to comply with U.S. Census Bureau Foreign Trade Regulations, check the box "NOEEI § 30.37(a)" or "NOEEI § 30.37(h)." Use the following explanations to help determine your choice:

- NOEEI 30.37(a) may be used when the value of each class of goods is $2,500 or less, when an export license is not required. This Exemption and Exclusion Legend may never be used for items sent to Cuba, North Korea, or Sudan.
- NOEEI 30.37(h) may be used for gift parcels or humanitarian donations destined to certain sanctioned countries (as of 12/2009, this includes Cuba, North Korea, and Sudan), if the package complies with the conditions set forth in 15 CFR § 740.12.

(8) Sign and date the form. Your signature certifies that all entries are correct and the item(s) being mailed contain no dangerous, prohibited, or restricted contents per postal, customs, or destination country regulations. Your signature also certifies compliance with Foreign Trade Regulations and confirms your liability for the item(s) being mailed.

Privacy Act Statement: Your information will be used to satisfy reporting requirements for customs purposes. Collection is authorized by 39 U.S.C. 401, 403, 404, and 407; 13 U.S.C. 301 – 307; and 50 U.S.C. 1702. Providing this information is voluntary, but if not provided, we may not process your transaction. We do not disclose your information to third parties without your consent, except to facilitate the transaction, to act on your behalf or request, or as legally required. In addition to disclosures permitted by statute, this includes the following limited circumstances: to a congressional office on your behalf; to financial entities regarding financial transaction issues; to a USPS® auditor; to entities, including law enforcement, as required by law or in legal proceedings; to contractors and other entities aiding us to fulfill the service (service providers); and to domestic and international customs pursuant to federal law and agreements, the U.S. Census Bureau, and other governmental entities with authority over exportation.

PS Form **2976,** December 2009 Reverse - **Sender's Instructions**

LC12345678XUS

☐ Documents ☐ Commercial sample ☐ Other_____

☐ Merchandise ☐ Gift Country of Origin of Goods_____

Detailed description of contents (1)	Qty. (2)	Weight (3) lb. oz.	Value (4) (US $)	HS Tariff # (5)
		Totals (6)	$	

Exemption/Exclusion Legend (7)
(Check one of the following) ☐ NOEEI § 30.37(a) ☐ NOEEI § 30.37(h)

I certify the particulars given in this customs declaration are correct. This item does not contain any dangerous article, or articles prohibited by legislation or by postal or customs regulations. I have met all applicable export filing requirements under the Foreign Trade Regulations.

Sender's Signature and Date (8)

PS Form **2976,** December 2009 PSN 7530-01-000-9833

USPS® **Customs Declaration – CN 22**

IMPORTANT: The item/parcel may be opened officially. See Privacy Notice on reverse of Sender's Instructions page. Please print in English and press firmly; you are making multiple copies.

Detach

From:

To:

Mailing Office Date Stamp

Detach

3 - **Shipping Label (left) and Customer Copy (right)**

Sample

123.712 **Postal Service Employee's Acceptance of PS Form 2976**

The Postal Service acceptance employee must do the following when accepting PS Form 2976 from the sender:

a. Instruct the sender how to complete, legibly and accurately, PS Form 2976, as required. The sender's failure to complete the form properly can delay delivery of the item or inconvenience the sender and addressee. Moreover, a false, misleading, or incomplete declaration can result in the seizure or return of the item and/or in criminal or civil penalties. The Postal Service assumes no responsibility for the accuracy of information that the sender enters on PS Form 2976.

b. Verify that the sender has entered the information on the form, and has signed and dated the form in the spaces provided on the left side and the right side of the form. The sender's address on the mailpiece must match the sender's address on PS Form 2976.

c. Enter the total weight of the package on the form, if the sender has not already done so.

d. Round stamp the right side of the form (the Post Office copy) and tell the sender that the Postal Service will retain this document for 30 days as a record of mailing.

e. To comply with U.S. Census Bureau requirements, it is the customer's responsibility to ensure an appropriate Exemption and Exclusion Legend is selected or displayed on PS Form 2976. In addition, items sent to Cuba may require a Proof of Filing Citation or AES Downtime Citation.

123.72 PS Form 2976-A, Customs Declaration and Dispatch Note — CP 72

123.721 **Sender's Preparation of PS Form 2976-A**

a. Enter the sender's full name and address and the addressee's full name and address in the blocks indicated.

b. Enter information for customs reference, importer's reference, and telephone/fax/e-mail, if known.

c. In block (1), provide a detailed description, in English, of each article. General descriptions such as "food," "medicine," "gifts," or "clothing" are not acceptable. In addition to the English text, a translation in another language is permitted. If there is insufficient space on the form to list all contents, use a second form (and subsequent forms, if necessary) to continue listing the contents and indicate on the first form that the contents are continued on a subsequent form(s). When using this option, customers must ensure that the barcodes on the subsequent forms are *totally obliterated* to avoid multiple barcodes being assigned to the package. Place the form(s) into PS Form 2976-E (plastic envelope).

d. In block (2), enter the quantity of each article.

e. In block (3), enter the net weight of each article in pounds and ounces, if known.

f. In block (4), enter the value for each article in U.S. dollars.

g. In block (5), check the appropriate box to indicate whether the package contains a gift, documents, commercial samples, or other items.

h. In block (6), check the appropriate box for the applicable type of service.

i. In block (7), note any restrictions that pertain to block 12.

j. In block (8), enter the total gross weight in pounds and ounces.

k. In block (9), enter the total value of all items in U.S. dollars.

l. In block (10), provide disposal instructions in the event that the package cannot be delivered. Check the appropriate box to indicate whether the package is to be returned, treated as abandoned, or forwarded to an alternate address. Undeliverable packages returned to the sender are, upon delivery, subject to collection of return postage and any other charges assessed by the foreign postal authorities. If you are unwilling to pay return postage, check the box "Treat as Abandoned."

m. In block (11), enter the applicable Exemption or Exclusion Legend, Proof of Filing Citation, or AES Downtime Citation.

n. In block (12), provide details if the contents are subject to quarantine (plant, food products, etc.).

o. In block (13), sign and date the form. The sender's signature certifies that all entries are correct and that the item contains no dangerous article prohibited by postal or other regulations.

p. In blocks (14), (15), (16), (17), (18), and (19), enter the applicable number if the item requires a sender's customs reference or importer's reference, or if the item is accompanied by a license, certificate, or invoice.

q. In blocks (20) and (21) — which are for commercial items only (i.e., goods exported/imported in the course of a business transaction whether or not they are sold for money or exchanged) — enter, if known, the HS tariff number (which is the six-digit number based on the Harmonized Commodity Description and Coding System developed by the World Customs Organization) and the country of origin (which is the country where the goods originated — i.e., where the goods were produced, manufactured, or assembled).

r. Place the form set inside PS Form 2976-E (plastic envelope) and affix it to the address side of the package. Allow the Postal Service employee to complete PS Form 2976-A as described in 123.722.

s. Present the item for mailing.

Exhibit 123.721

PS Form 2976-A, Customs Declaration and Dispatch Note — CP 72 (Instructions, Copies 1 and 4, and Indemnity Statement)

Note: To see the complete PS Form 2976-A, click the link below:

http://about.usps.com/forms/ps2976a.pdf

INSTRUCTIONS FOR COMPLETING THIS FORM *(Remove this page prior to completing form.)*

Please print this form in English using blue or black ink, pressing firmly so all information transfers to all copies. Complete the declaration fully and legibly; otherwise, delay and inconvenience may result for the addressee. A false or misleading declaration may lead to a fine or seizure of the item and additional penalties. You may add a translation of the contents in a language accepted in the destination country.

Your goods may be subject to restrictions. It is your responsibility to comply with import and export regulations and restrictions (e.g., quarantine, pharmaceutical, etc.), and to determine what documents (e.g., commercial invoice, certificate of origin, health certificate, license, authorization for goods subject to quarantine such as plant, animal, or food products, etc.), if any are required in the destination country. Check the country listings at *http://pe.usps.gov/*, as well as the UPU List of Prohibited Items available at *http://www/upu.int/customs/en/country_list_en.pdf*.

FROM (Sender information) and TO (Addressee information) sections: The sender's and addressee's full name and full address must be entered in the blocks provided on the 2976-A. Incomplete names (e.g., initials) or incomplete address entries on the 2976-A may result in delayed handling by Customs and/or the delivery office.

Block 1: Enter a detailed description of each article - e.g., "men's cotton shirts." General descriptions - e.g., "samples", "food products" or "toiletries" - are not permitted. If there is insufficient space on the form to list all articles, use additional form(s) as needed. Indicate on the first form (to the right of the barcode) the following: "Additional forms enclosed". **Important:** Obliterate the tracking number and barcode on subsequent form(s) and place all the form(s) into PS Form 2976-E (plastic envelope).

Block 2 - Block 4: Enter the quantity, net weight (in pounds and ounces) and value (in U.S. dollars) of each article.

Block 5: Check the box specifying the category of the item.

Block 6: Select mail handling method.

Block 7: Identify if special conditions or restrictions apply to items being mailed, if applicable.

Block 8: Enter the total weight of the package in pounds and ounces, including packaging, which corresponds to the weight used to calculate the postage.

Block 9: Enter the total value in U.S. dollars.

Block 10: Check the box specifying instructions in case of nondelivery. Items returned to sender are subject to return charges at the sender's expense.

PS Form **2976-A,** May 2009 PSN: 7530-01-000-9834 *See reverse of this page for additional instructions on how to complete this form*

Sample

Exhibit 123.721

PS Form 2976-A, Customs Declaration and Dispatch Note — CP 72
(Instructions, Copies 1 and 4, and Indemnity Statement)

CP12345678XUS

United States Postal Service®
Customs Declaration and Dispatch Note — CP 72

IMPORTANT: This item may be opened officially. Please print in English, using blue or black ink, and press firmly; you are making multiple copies. See Privacy Notice and Indemnity Coverage on Customer Copy.

FROM: Sender's Last Name | First | MI
Business
Address *(Number, street, suite, apt., P.O. Box, etc. Residents of Puerto Rico include Urbanization Code preceeded with URB)*
City | State | ZIP+4®
TO: Addressee's Last Name | First | MI
Business
Address *(Number, street, suite, apt., P.O. Box, etc.)*
Postcode | City
State/Province | Country

Insured Amount (US $) $ .00 | SDR Value
Insurance Fees (US $) $. | Total Postage Fees (US $) $.
14. Sender's Customs Reference *(If any)*
15. Importer's Reference - Optional *(If any)*
16. Importer's Telephone ☐ Fax ☐ Email ☐ *(select one)*
17. License No.
18. Certificate No.
19. Invoice No.

1. Detailed Description of Contents *(enter one item per line)* | 2. Qty. | 3. Lbs. | Oz. | 4. Value (U.S. $)

For Commercial Senders Only
20. HS Tariff Number | 21. Country of Origin of Goods

5. Check One: ☐ Gift ☐ Documents ☐ Merchandise ☐ Returned Goods ☐ Commercial Sample ☐ Other:
6. Check One ☐ Airmail ☐ Surface
7. Other Restrictions: *(pertains to No. 12)*
8. **Total Gross Wt:** *(all items Lbs. & Ozs.)*
9. **Total Value US $** *(all items)*
10. If non-deliverable: ☐ Treat as Abandoned ☐ Return to Sender *(see inst)* ☐ Redirect to Address Below:
Mailing Office Date Stamp
11. **EEL/PFC**
12. Restrictions ☐ Quarantine ☐ Sanitary or Phytosanitary Inspection
13. I certify the particulars given in this customs declaration are correct. This item does not contain any dangerous article, or articles prohibited by legislation or by postal or customs regulations. I have met all applicable export filing requirements under the Foreign Trade Regulations. *Sender's Signature and Date* Month Day Year

PS Form **2976-A,** May 2009 PSN: 7530-01-000-9834 Do not duplicate this form without USPS® approval. 1 - Manifesting/Scan Copy

Sample

CP12345678XUS

United States Postal Service®
Customs Declaration and Dispatch Note — CP 72

IMPORTANT: This item may be opened officially. Please print in English, using blue or black ink, and press firmly; you are making multiple copies. See Privacy Notice and Indemnity Coverage on Customer Copy.

FROM: Sender's Last Name | First | MI
Business
Address *(Number, street, suite, apt., P.O. Box, etc. Residents of Puerto Rico include Urbanization Code preceeded with URB)*
City | State | ZIP+4®
TO: Addressee's Last Name | First | MI
Business
Address *(Number, street, suite, apt., P.O. Box, etc.)*
Postcode | City
State/Province | Country

Insured Amount (US $) $ .00 | SDR Value
Insurance Fees (US $) $. | Total Postage Fees (US $) $.
14. Sender's Customs Reference *(If any)*
15. Importer's Reference - Optional *(If any)*
16. Importer's Telephone ☐ Fax ☐ Email ☐ *(select one)*

Declaration by ADDRESSEE: I have received the parcel described on this note. ***ADDRESSEE'S** Signature and Date* Month Day Year

19. Invoice No.

Office of Exchange
Customs Stamp
Customs Duty
Please affix labels here when required

5. Check One: ☐ Gift ☐ Documents ☐ Merchandise ☐ Returned Goods ☐ Commercial Sample ☐ Other:
6. Check One ☐ Airmail ☐ Surface
7. Other Restrictions: *(pertains to No. 12)*
8. **Total Gross Wt:** *(all items Lbs. & Ozs.)*
9. **Total Value US $** *(all items)*
10. If non-deliverable: ☐ Treat as Abandoned ☐ Return to Sender *(see inst)* ☐ Redirect to Address Below:
Mailing Office Date Stamp
11. **EEL/PFC**
12. Restrictions ☐ Quarantine ☐ Sanitary or Phytosanitary Inspection
13. I certify the particulars given in this customs declaration are correct. This item does not contain any dangerous article, or articles prohibited by legislation or by postal or customs regulations. I have met all applicable export filing requirements under the Foreign Trade Regulations. *Sender's Signature and Date* Month Day Year

PS Form **2976-A,** May 2009 PSN: 7530-01-000-9834 Do not duplicate this form without USPS® approval. 4 - Dispatch Note

Sample

Exhibit 123.721
PS Form 2976-A, Customs Declaration and Dispatch Note — CP 72 (Instructions, Copies 1 and 4, and Indemnity Statement)

IMPORTANT: *Save this receipt and present it when making an inquiry.*

PARCEL INDEMNITY COVERAGE: Indemnity for Priority Mail International® parcels, including insured and ordinary (uninsured) parcels, is provided only in accordance with Postal Service regulations in the Domestic Mail Manual (DMM®) and the International Mail Manual (IMM®). The DMM and IMM are available for inspection at any Post Office™ or online at *http://pe.usps.gov/*. The addressee must report damage or missing contents to the delivering Post Office immediately.

Ordinary, i.e. uninsured, Priority Mail International parcels include indemnity coverage against loss, damage or missing contents. Indemnity is limited to the lesser of the actual value of the contents or the maximum indemnity based on the weight of the article. The Priority Mail International Flat Rate Envelope and Priority Mail International Small Flat Rate Box are letter post items and do not include indemnity coverage.

Insured mail service is available for a fee and replaces indemnity on ordinary parcels. Insurance coverage varies by country and is not available to some countries. Indemnity coverage is subject to both U.S. Postal Service® regulations and the domestic regulations of the destination country. Insurance for loss, damage, or missing contents covers the actual (depreciated) value of the contents.

Claims for lost ordinary and insured parcels may be payable only to the sender, and claims for damage and missing contents may be payable only to the addressee. The sender or addressee may waive the right of payment in favor of the other.

FILING CLAIMS: To initiate an inquiry for loss, damage or missing contents, call the International Inquiry Center at 800-222-1811. International indemnity inquiries and claims for loss must be filed within the time limits for the service purchased. All claims for damage or missing contents must be filed immediately and the article, containers, packaging, and all contents received must be presented to the destination Post Office.

Evidence of mailing (e.g., original mailing receipts or wrapper), evidence of insurance, and evidence of value (e.g., sales receipt or repair estimate) must be submitted in support of all claims. See IMM and Individual Country Listings for complete regulations at *http://pe.usps.gov/*.

EXCEPTIONS: No coverage is provided for consequential losses, delay, concealed damage, spoilage of perishable items, articles improperly packaged, articles too fragile to withstand normal handling in the mails, or prohibited articles. See the DMM and the IMM for the specific types of losses that are covered, the limitations on coverage, terms of insurance or indemnity and conditions of payment.

IMPORTANT: Indemnity coverage is not paid for Express Mail International or ordinary (uninsured) Priority Mail International parcels containing coins; banknotes; currency notes (paper money); securities of any kind payable to the bearer; traveler's checks; platinum, gold, silver (manufactured or not); precious stones; jewelry, including watches; and other valuable or prohibited articles. See the IMM for complete regulations.

PRIVACY ACT STATEMENT: Your information will be used to satisfy reporting requirements for customs purposes. Collection is authorized by 39 U.S.C. 401, 403, 404, and 407; 13 U.S.C. 301 - 307; and 50 U.S.C. 1702. Providing this information is voluntary, but if not provided, we may not process your transaction. We do not disclose your information to third parties without your consent, except to facilitate the transaction, to act on your behalf or request, or as legally required. This includes the following limited circumstances: to a congressional office on your behalf; to financial entities regarding financial transaction issues; to a USPS auditor; to entities, including law enforcement, as required by law or in legal proceedings; and to contractors and other entities aiding us to fulfill the service (service providers); and to domestic and international customs pursuant to federal law and agreements, the U.S. Census Bureau, and other governmental entities with authority over exportation.

PS Form **2976-A,** May 2009 *(Reverse of Page 6 of 6, Sender's Copy)* PSN: 7530-01-000-9834

Sample

123.722 **Postal Service Employee's Acceptance of PS Form 2976-A**

The Postal Service acceptance employee must do the following when accepting PS Form 2976-A from the sender:

a. Instruct the sender how to complete, legibly and accurately, PS Form 2976-A, as required. The sender's failure to complete the form properly can delay delivery of the item or inconvenience the sender and addressee. Moreover, a false, misleading, or incomplete declaration can result in the seizure or return of the item and/or in criminal or civil penalties. The Postal Service assumes no responsibility for the accuracy of information that the sender enters on PS Form 2976-A.

b. Verify that the sender has entered the information on the form and has signed and dated the declaration. The sender's address on the mailpiece must match the sender's address on PS Form 2976-A.

c. To comply with U.S. Census Bureau requirements, it is the customer's responsibility to ensure that an appropriate Exemption and Exclusion Legend, Proof of Filing Citation, or AES Downtime Citation is displayed on PS Form 2976-A. If this information is not entered, remind the customer that he or she may be subject to civil and criminal penalties for noncompliance.

d. If the sender wishes to insure the contents, the retail associate will record the insured amount in U.S. dollars and special drawing right (SDR) value on PS Form 2976-A in the space provided. (See Exhibit 323.62 for the conversion table.)

e. Weigh the parcel, enter the weight in block (8), and enter the applicable amount of postage and fees in the appropriate block in the upper right corner of the form.

f. Round stamp the form in the appropriate place on each copy (copies 1–6).

g. Remove the Post Office copy (copy 5) and tell the mailer that the Postal Service will retain this document for 30 days as a record of mailing. Remove the Mailer copy (copy 6) and give it to the mailer.

h. Round stamp any uncanceled stamps, and if postage is paid by meter, round stamp the front of the piece near the meter postage.

Note: To comply with international mail aviation security procedures, the Postal Service employee must endorse any item weighing 16 ounces or more that is not accepted by an authorized employee, or that is subject to uncertain acceptance conditions (e.g., if received through a collection box or left on an unattended dock), with a "customer notification DDD-2" sticker and "surface only" and return the item to the sender by surface transportation. Consult the most recent international aviation security procedures for comprehensive acceptance procedures.

123.73 PS Form 2976-E, Customs Declaration Envelope — CP 91

PS Form 2976-E is a transparent plastic envelope designed to carry and protect the PS Form 2976-A form set. After completing the forms, the sender inserts the PS Form 2976-A form set into the envelope of PS Form 2976-E, removes the backing sheet, and affixes it to the package on the address side.

130 Mailability

131 General

131.1 Domestic Limits

All articles that are nonmailable in domestic mail are nonmailable in international mail. See DMM 601 and Publication 52, , *Restricted, and Perishable Mail.*

131.2 International Limits

Many articles that are mailable in domestic mail are nonmailable in international mail. See chapter 6 of Publication 52 and "Prohibitions and Restrictions" in the Individual Country Listings.

131.3 Individual Country Prohibitions and Restrictions

131.31 Information Available

Information on articles that are prohibited or restricted to individual countries appears under “Prohibitions and Restrictions” in the Individual Country Listings. These prohibitions and restrictions are based on information furnished by the countries concerned. Customers should inquire at the Post Office facility about specific prohibitions or restrictions.

131.32 Prohibited and Restricted Articles

Articles that are prohibited by the destination country are nonmailable. For mail known to contain articles restricted by the destination country, the sender must be informed of the restrictions and advised that the articles are subject to the import requirements of that country.

131.33 Return or Seizure of Mail

A country may return or seize mail containing articles prohibited or restricted within that country, whether or not notice of such prohibition or restriction has been provided to or published by the Postal Service.

131.34 Foreign Customs Information

The Postal Service does not maintain or provide information concerning the assessment of customs duty in other countries. Postal Service employees must not attempt to inform customers whether articles (gifts or commercial shipments) will be subject to customs duty. Postal Service employees may suggest to customers, however, that they inform the addressees in advance of the articles they intend to mail. Addressees can then obtain information from their local customs authorities. No provision is made for prepayment of customs duty on mail addressed for delivery in foreign countries.

If duties or taxes are assessed, most countries will collect from the recipient a customs clearance and delivery fee, in addition to the duties and taxes. This fee is authorized by international postal agreements to reimburse the delivery service for the costs it incurs in clearing the items through customs and collecting duties at the time of delivery. The duties, taxes, and fee, if applicable, are not included in the postage paid by the mailer.

131.4 Mailer Responsibility

Regardless of any statement in this manual or the statement of any employee of the United States Postal Service, the burden rests with the mailer to ensure compliance with domestic, international, and individual country rules and regulations for mailability.

131.5 Preparation for Mailing

131.51 General Packaging Requirements

Parcels of articles or goods must meet the requirements of DMM 601. See DMM 601 for the size and weight limits of parcels and for several grades of fiberboard boxes used for difficult loads. Boxes with difficult loads must be reinforced with banding in each direction around the package.

131.52 Special Packaging Requirements

Each mailer must meet the following special packaging requirements when mailing any of the following articles (see DMM 601):

a. Fragile articles, such as glass, must be cushioned as required to dissipate shock and pressure forces over as much of the surface of the item as possible.

b. Liquids must be packaged as required.

c. Package fatty substances that do not easily liquefy, such as ointments, soft soap, resins, etc., as well as silkworm eggs, in an interior container (box, cloth, or plastic bag) and place them in an outer shipping container of minimum 275-grade test strength.

d. Enclose dry, powdered dyes, such as aniline, in sift-proof, sturdy tin or plastic boxes in an outer sift-proof shipping container. This container must have a minimum 275-grade test strength fiberboard or equivalent.

132 Written, Printed, and Graphic Matter

132.1 Domestic Limits

All written, printed, and graphic matter that is described as nonmailable in DMM 601 is nonmailable internationally. This matter includes but is not limited to:

a. Advertisements for abortion.

b. Advertisements for motor vehicle master keys.

c. Copyright violations.

d. Fictitious matter.

e. Lottery matter.

f. Matter inciting violence.

g. Solicitations in the guise of bills or statements of account.

h. Solicitations or inducements for mailing harmful matter, radioactive materials, controlled substances, or intoxicating liquors.

Note: Immoral or obscene articles and advertisements for them are nonmailable.

132.2 Reply Cards and Envelopes

Mailpieces that are sent to foreign addressees may *not* contain prepaid reply cards or envelopes that bear a U.S. postage stamp, meter stamp, meter impression, or a domestic business reply indicia. See 382 for regulations governing mailer use of International Business Reply Service (IBRS).

Exception: The prohibition against enclosing U.S. domestic business reply cards or envelopes does *not* apply when they are bound into, are stapled to, or form an integral part of the printed page of mailpieces that are periodicals. Such enclosures may be admitted so long as they are not used as response vehicles by foreign recipients and the postal administrations of the destination countries do not object to their presence in U.S. origin publications.

133 Improperly Addressed Mail

The following items are nonmailable in international mail:

a. Unaddressed items.

b. Items whose ultimate destination cannot be determined due to insufficient, illegible, or incorrect addressing.

c. Items bearing multiple addresses to the same or different countries.

134 Valuable Articles

134.1 Service Options

The following services can be used to send the articles noted in 134.2:

a. First-Class Mail International service with Registered Mail service.

b. Priority Mail International Flat Rate Envelopes with Registered Mail service.

c. Priority Mail International Small Flat Rate Priced Boxes with Registered Mail service.

d. Priority Mail International service with insured service.

Note: Neither Express Mail International service nor ordinary (uninsured) Priority Mail International service can be used to send the articles noted in 134.2.

134.2 List of Articles

The following valuable articles may be sent only with the services noted in 134.1:

a. Coins, banknotes, and currency notes (paper money).

b. Instruments payable to bearer. (The term “instruments payable to bearer” includes checks, drafts, or securities that can be legally cashed or easily negotiated by anyone who may come into possession of them. A check or draft payable to a specific payee is not regarded as payable to bearer unless the payee has endorsed it. If not endorsed, or if endorsed in favor of another specific payee, it is not regarded as payable to bearer.)

c. Traveler’s checks.

d. Manufactured and unmanufactured platinum, gold, and silver.

e. Precious stones, jewels, jewelry, watches, and other valuable articles.

Note: The term “jewelry” is generally understood to denote articles of more than nominal value. Inexpensive jewelry, watches, such as tie clasps and costume jewelry, containing little or no precious metal, is not considered to be jewelry within the meaning of this section and is accepted under the same conditions as other mailable merchandise to any country. Inexpensive jewelry is accepted to countries that prohibit jewelry, but only at the sender’s risk.

134.3 Prohibitions

Individual countries prohibit or restrict some or all of the valuable items listed above. See the “Prohibitions and Restrictions” section in the Individual Country Listings.

135 Mailable Dangerous Goods

135.1 Infectious Substances

135.11 General Conditions

Infectious and noninfectious (nonregulated) biological substances are acceptable in international mail subject to the provisions of DMM 601.10.17 under the following conditions: when they are intended for medical or veterinary use, research, or laboratory certification related to the public health; only when such materials are properly prepared for mailing to withstand shocks, pressure changes, and other conditions related to ordinary handling in transit; and under the additional conditions specified in subsections below.

a. Category A infectious substances are not mailable. Category A infectious substances as identified in DMM 601.10.17.2a1 are substances transported in a form capable of causing permanent disability or life-threatening or fatal disease in otherwise healthy humans or animals when exposure occurs. A Category A infectious substance is assigned the identification number UN 2814 or UN 2900, based on the known medical history or symptoms of the source patient or animal, endemic local conditions, or professional judgment concerning the individual circumstances of the source human or animal. A list of indicative examples of infectious substances included in Category A can be found in International Air Transportation Association (IATA) Dangerous Goods Regulations, Table 3.3.D.

b. Category B infectious substances are mailable when they meet the definition in DMM 601.10.17.2a2. A Category B infectious substance does not meet the criteria for inclusion in Category A. A mailpiece known or suspected to contain a Category B infectious substance must bear the proper shipping name “Biological substance, Category B” on the address side of the mailpiece and must be assigned to and marked with identification number UN 3373.

c. Nonregulated (noninfectious) materials identified in DMM 601.10.17.3 as nonregulated are mailable. Nonregulated substances do not contain infectious substances or substances that are likely to cause disease in humans or animals. Nonregulated materials are not subject to regulation as materials but must be properly packaged as indicated in DMM 601.10.17.8 when presented for mailing.

d. Exempt human or animal specimens as defined in DMM 601.10.17.2d are mailable. They are not subject to regulation as materials, but when presented for mailing, they must be packaged as identified in DMM 601.10.17.9.

135.12 Type of Mail

Category B infectious substances must be sent only by First-Class Mail International service or Priority Mail International Flat Rate Envelopes or Small Flat Rate Priced Boxes using Registered Mail™ service. Nonregulated materials defined in DMM 601.10.17.3 and exempt human or animal specimens defined in DMM 601.10.17.2d are mailable by First-Class Mail International service when properly packaged as described in DMM 601.10.17.

135.13 Senders and Receivers

Substances identified in 135.11b *must* be sent *only* by authorized laboratories to their foreign counterparts in those countries that have indicated a willingness to accept them.

Note: Countries distinguish between infectious and noninfectious (nonregulated) biological substances and may prohibit one or the other or both. See "Prohibitions" in the Individual Country Listings.

135.2 Authorization

135.21 Authorized Institutions

Infectious biological substances can be sent to or received by *only* the following types of institutions:

a. Laboratories of local, state, and federal government agencies.

b. Laboratories of federally licensed manufacturers of biological products derived from bacteria and viruses.

c. Laboratories affiliated with or operated by hospitals, universities, research facilities, and other teaching institutions.

d. Private laboratories licensed, certified, recognized, or approved by a public authority.

135.22 Request for Authorization

A qualifying institution wishing to mail packages containing biological substances must submit a written request on its organizational letterhead to the following address:

MANAGER PRODUCT CLASSIFICATION
US POSTAL SERVICE
475 L'ENFANT PLZ SW RM 4446
WASHINGTON DC 20260-5015

In its letter of application, the institution must indicate the nature of its work, the identity and qualifications of the prospective recipient, and the number of packages to be mailed.

135.3 Packaging, Marking, Labeling

135.31 Category B Infectious Substances

A material that is classified as a Category B infectious substance and that meets the definition in DMM 601.10.17.2a2 must be triple-packaged as described in DMM 601.10.17.4, must meet the packaging requirements in 49 CFR 173.199, and must be sent only by First-Class Mail International service or Priority Mail International Flat Rate Envelopes or Small Flat Rate

Priced Boxes using Registered Mail service. Each primary receptacle containing a liquid must be leakproof and surrounded by absorbent material sufficient to protect the primary receptacle and absorb the total amount of liquid should the primary receptacle leak or break. Each primary receptacle containing a solid must be sift proof. Secondary containers for liquids must be leak proof. Secondary containers for solids must be sift proof. The primary and secondary packaging must be enclosed in a rigid outer shipping container. A single primary receptacle must not contain more than 1 liter (34 ounces) of a liquid specimen or 4 kg (8.8 pounds) of a solid specimen. Multiple primary receptacles whose combined volume does not exceed 4 liters (1 gallon) for liquids or 4 kg (8.8 pounds) for solids may be enclosed in a single secondary container. In addition:

a. The secondary container must be marked with the international biohazard symbol shown in DMM Exhibit 601.10.17.5d3.

b. A primary receptacle or secondary packaging containing liquid must be capable of withstanding, without leakage, an internal pressure producing a pressure differential of not less than 95 kPa (0.95 bar, 14 psi) in the range of -40° C to 55° C (-40° F to 130° F).

c. All mailpieces sent under DMM 601.10.17.4 must be marked on the address side with the shipping name “Biological substance, Category B” and the “UN 3373” marking as outlined in 49 CFR 173.199 (a) (5).

d. Orientation arrows are not required on these mailpieces but may be used.

e. The outer packaging must show the name and telephone number of a person who is knowledgeable about the material shipped and has comprehensive emergency response and incident mitigation information, or of someone who has immediate access to the person with such knowledge and information.

135.32 Nonregulated Materials (Noninfectious Biological Substances)

Nonregulated materials are not subject to regulation as materials but must be properly packaged, marked, and labeled as indicated in DMM 601.10.17.8 when presented for mailing.

135.33 Exempt Human or Animal Specimens

Exempt human or animal specimens are not subject to regulation as materials but must be properly packaged, marked, and labeled as indicated in DMM 601.10.17.9 when presented for mailing.

135.4 Handling and Dispatch of Infectious Substances

135.41 Biological Substances

Items that contain perishable biological substances must be given careful yet expeditious handling from receipt through dispatch.

135.42 Infectious Substances

Shipments containing infectious substances must be segregated from other types of mail matter (i.e., placed in separate sacks). PS Tag 44, *Sack Contents Warning,* must be attached to the outside of sacks to identify the

nature of the contents. PS Tag 44 is for internal use only, and must be removed from mail sacks, and the materials tendered to air carriers as outside pieces.

135.5 Radioactive Materials

Shipments containing radioactive materials are acceptable in international mail subject to the provisions of DMM 601 and of Publication 52, *, Restricted, and Perishable Mail*, and under the following conditions:

a. Shipments may be sent only by First-Class Mail International service or Priority Mail International Flat Rate Envelopes or Small Flat Rate Priced Boxes with Registered Mail service.

b. Shipments may be sent only to those countries that have expressed a willingness to accept radioactive materials. See “Prohibitions and Restrictions” in the Individual Country Listings.

c. Shipments must comply with the International Atomic Energy Agency rules and regulations.

d. Senders and recipients of radioactive materials must receive prior authorization from the appropriate regulatory authorities within their countries.

e. A white package label bearing the French words “Matieres Radioactives” (Radioactive Materials) must be applied to the address side of each package containing radioactive materials. Senders are responsible for supplying and affixing this label to the package.

f. The package must also bear the following endorsements in bold letters: “RETURN TO SENDER IN CASE OF NONDELIVERY” and “RADIOACTIVE MATERIALS, QUANTITIES PERMITTED FOR MOVEMENT BY POST.”

136 Nonmailable Goods

136.1 Dangerous Goods

The following dangerous goods (materials, as defined in DMM 601) are prohibited in outbound international mail:

a. Explosives or explosive devices.

b. Flammable materials.

(1) Pyrophoric, flammable, or combustible liquids with a closed cup flash point below 200°F.

(2) Flammable solids, including matches.

c. Oxidizers.

d. Corrosives, liquid or solid.

e. Compressed gases.

(1) Flammable.

(2) Nonflammable with an absolute pressure exceeding 40 psi at 70°F or 104 psi at 130°F.

f. Poisons, irritants, controlled substances, and drug paraphernalia.

g. Magnetized material with a magnetic field strength of .002 gauss or more at a distance of 7 feet.

h. Dry ice (carbon dioxide solid).

136.2 Inert Replica and Explosive Devices

The following types of replica or inert explosive devices are prohibited in outbound international mail:

a. Military ordnance, ammunition, and shells.

b. Grenades.

c. Similar devices that were originally designed for military or combative use (including training).

This prohibition does not extend to items such as children's toys or articles that do not represent the above items in a realistic manner.

136.3 Counterfeit and Pirated Items

Any type of counterfeit or pirated article is prohibited in outbound international mail.

136.4 Cigarettes and Smokeless Tobacco

Cigarettes (including roll-your-own tobacco) and smokeless tobacco products, as defined in DMM 601.11.1, are nonmailable when sent in outbound or inbound international mail. As noted in DMM 601.11.3, the exceptions for mailing under DMM 601.11.4 through 601.11.8 are not available for shipments of such products in international mail. This standard prevails regardless of any information to the contrary in the Individual Country Listings.

137 Firearms, Knives, and Sharp Instruments

Some items (see DMM 601) may be mailed to certain countries under the conditions specified in the Individual Country Listings. See 540 for U.S. Department of State licensing requirements applicable to the international mailing of arms or implements of war, component parts, and related technical data.

138 Perishable Matter

138.1 Animals

All live or dead animals are nonmailable, except the following:

a. Live bees, leeches, silkworms, and flies of the family Drosophilidae (see DMM 601.9.3.8).

b. Dead insects or reptiles, when thoroughly dried.

c. Parasites and predators of injurious insects, if the following conditions are met:

(1) They are admissible in the domestic mail.

(2) They are useful in controlling harmful insects.

(3) They are exchanged by officially recognized scientific or health agencies.

(4) They are sent by First-Class Mail International service, including Flat Rate Envelopes or Small Flat Rate Priced Boxes.

(5) Mailable animals must be in containers conforming to the requirements in the DMM.

138.2 Plants

Plants, seeds, and plant materials, including fruits and vegetables, are subject to the provisions of DMM 601; Publication 14, *Prohibitions and Restrictions on Mailing Animals, Plants, and Related Products*; and the quarantine regulations of the country of destination. Customers can obtain information from the U.S. Department of Agriculture (USDA) Animal and Plant Health Inspection Service (APHIS) Plant Protection and Quarantine (PPQ) Programs at:

USDA APHIS PPQ
4700 RIVER RD
RIVERDALE MD 20737-1228

138.3 Eggs

138.31 Restrictions

Eggs may be sent only by Priority Mail International. See 550 for nonpostal regulations on dried whole eggs.

138.32 Packaging

Eggs must be packaged in the following manner:

a. Eggs mailed to any country except Canada must be placed in a metal egg container. Each egg must be packed in cushioning material. The metal egg container must be enclosed in an outer container of wood with cushioning packed between the two containers.

b. Eggs mailed to Canada may be packed either as prescribed in 138.32a or in a box of rigid material with a tight-fitting lid. Each egg must be wrapped in protective material and placed on end. Vacant spaces in the box must be filled with packing material to prevent the eggs from striking each other or the box.

138.4 Food and Other Perishable Articles

Fruits, vegetables, fresh meats, and other articles that easily decompose or that cannot reasonably be expected to reach their destination without spoiling are nonmailable.

140 International Mail Categories

141 Definitions

141.1 General

There are four principal categories of international mail that are primarily differentiated from one another by speed of service. They are Global Express

Guaranteed® (GXG®) service, Express Mail International® service, Priority Mail International service, and First-Class Mail International service.

141.2 Global Express Guaranteed

Global Express Guaranteed is the U.S. Postal Service's premium international mail service. Global Express Guaranteed is an expedited delivery service that is the product of a business alliance between the U.S. Postal Service and FedEx Corporation. It provides reliable, high-speed, time-definite service from designated U.S. ZIP Code™ areas to locations in most destination countries. Global Express Guaranteed is assured to meet destination-specific delivery standards or the postage will be refunded. If a shipment is lost or damaged, liability for loss or damaged merchandise or for document reconstruction is limited to a maximum of $100 or the amount of additional optional insurance purchased. The maximum weight limit for Global Express Guaranteed service is 70 pounds, but lower country-specific weight limits might apply. To determine the maximum weight limit for each country, see the Individual Country Listings or Publication 141, *Global Express Guaranteed Service Guide*.

141.3 Express Mail International

The next level of service, in terms of speed and value-added features, is Express Mail International. Express Mail International is an expedited mail service that can be used to send documents and merchandise to most of the country locations that are individually listed in this publication. Express Mail International insurance coverage against loss, damage, or missing contents, up to a maximum of $100, is provided at no additional charge. Additional merchandise insurance coverage up to $5,000 may be purchased at the sender's option to many countries. Document reconstruction insurance coverage is limited to a maximum of $100 per shipment. Country-specific maximum weight limits range from 22 pounds to 70 pounds. See the Individual Country Listings. Express Mail International shipments offer a date-certain, postage-refund guarantee to select destinations: see 221.2 and the Individual Country Listings to determine the availability of such service. For all other destinations, Express Mail International shipments are not subject to a postage refund guarantee if a delivery delay occurs.

141.4 Priority Mail International

Priority Mail International is subject to the provisions of the Universal Postal Union Parcel Convention with the exception of Flat Rate Envelopes and Small Flat Rate Priced Boxes. This classification is primarily designed to accommodate larger and heavier shipments whose size and/or weight exceed the limits for First-Class Mail International. For countries that offer parcel service, maximum weight limits range from 22 pounds to 70 pounds. To determine the maximum weight limit for each country, see the Individual Country Listings. At the sender's option, extra services, such as insurance coverage and return receipt service, may be added on a country-specific basis.

Priority Mail International Flat Rate Envelopes and Small Flat Rate Priced Boxes are subject to the provisions of the Universal Postal Union Letter-post

Convention and provide customers with an economical means of sending correspondence, documents, printed matter, and lightweight merchandise items to foreign destinations. The maximum weight limit is 4 pounds. Registered Mail service is available for Priority Mail International Flat Rate Envelopes — with the exception of the Flat Rate Padded Envelope — and Small Flat Rate Priced Boxes. Insurance is not available for Priority Mail International Flat Rate Envelopes or Small Flat Rate Priced Boxes.

141.5 First-Class Mail International

First-Class Mail International is a generic term for mailpieces that have different shapes, sizes, and contents, that weigh 4 pounds or less, and that are subject to the provisions of the Universal Postal Union Letter-post Convention. First-Class Mail International items may contain any mailable matter that is not or prohibited by the destination country. Aerogrammes are not available for purchase. Previously purchased aerogrammes are mailable at the applicable First-Class Mail International price. At the sender's option, extra services, such as registry and return receipt, may be added on a country-specific basis.

Note: The term First-Class Mail International encompasses all of the classes of international letter-post mail (i.e., letter and letter packages, postcards, printed matter, and small packets) that were formerly categorized as LC (letters and cards) and AO (other articles) respectively.

142 Official Mail

142.1 Mailings by Federal Agencies

Official mail (sent by federal agencies and departments listed in Postal Service Handbook DM-103, *Official Mail*) that bears the indicia prescribed in DMM 703 may be sent to foreign destinations. Such items are subject to the postage payment requirements, weight and size limits, customs form requirements, and general conditions for mailing that otherwise apply to the class and category of the international mail being sent.

142.2 Postal Service Mailings

International mailpieces that are sent by or on behalf of the U.S. Postal Service must bear the prescribed G-10 permit indicia. Postal Service official mail is subject to all restrictions (e.g., maximum size and weight limits) as defined in the Individual Country Listings for the destination country of mailing.

142.3 Mail of a Former President and Surviving Spouse of a Former President

All nonpolitical mail of former United States Presidents, and of the surviving spouse of a former President, must be accepted without prepayment of postage if it bears the written signature of the sender, or a facsimile signature and the words "POSTAGE AND FEES PAID" in the upper-right corner of the address side.

142.4 General Secretariat of the Organization of American States (OAS)

a. Unregistered First-Class Mail International items bearing the return address of the OAS General Secretariat and weighing not more than 4 pounds are accepted without postage when addressed to the OAS member countries listed in 142.4c.

b. Items other than First-Class Mail International with extra services may *not* be provided for OAS General Secretariat official mail without the prepayment of postage or the fee for the extra service requested.

c. The following countries are members of the Organization of American States (OAS):

Antigua and Barbuda	Ecuador	Saint Christopher and Nevis
Argentina	El Salvador	Saint Lucia
Bahamas	Grenada	Saint Vincent and the Grenadines
Barbados	Guatemala	Suriname
Bolivia	Haiti	Trinidad and Tobago
Brazil	Honduras	United States
Canada	Jamaica	Uruguay
Chile	Mexico	Venezuela
Colombia	Nicaragua	
Costa Rica	Panama	
Dominica	Paraguay	
Dominican Republic	Peru	

142.5 Pan American Sanitary Bureau Mail

a. Unregistered First-Class Mail International items bearing the return address of the bureau and weighing not more than 4 pounds are accepted without postage affixed when addressed to an OAS member country listed in 142.4c or to Cuba.

b. Items with the bureau return address that are sent other than First-Class Mail International or that request extra services must prepay all postage and fees.

150 Postage

151 Postage Prices

See Individual Country Listings.

152 Payment Methods

152.1 Prepayment

Each item must be fully prepaid to ensure prompt dispatch and to avoid assessment of charges against the addressee. For the treatment of shortpaid and unpaid mail, see 420.

152.2 Stamps

a. Postage and fees for extra services (see chapter 3) may be paid by means of U.S. postage stamps, postage meter stamps, or postage validation imprinter (PVI) labels. PVIs are acceptable for all international mail transactions.

b. Mailer precanceled stamps may be used with international mail under the same conditions as are applicable to domestic mail. See DMM 604.

c. Nondenominated postage stamps (except for those that bear unique domestic markings, such as First-Class Presort, Nonprofit Org.) may be affixed to postal items that are sent to foreign countries. The value of such stamps is linked to either a current or a former domestic postage price (e.g., the “Lady Liberty and U.S. Flag” stamp has a postage value of 39 cents). The postage value of the Forever Stamp, as well as the nondenominated Breast Cancer Research semipostal stamp, is always the domestic First-Class Mail single-piece 1-ounce letter price that is in effect on the day of use (mailing). Since international postage prices are always higher than the comparable domestic postage prices, mailers who affix a single nondenominated postage stamp to their outbound mailpieces must add additional postage to comply with the international price schedule.

Note: See DMM 604 for stamps not valid as postage.

152.3 Computing Postage

152.31 Determining Single-Piece Weight

To determine single-piece weight in any mailing at single-piece prices, or in a bulk price mailing of nonidentical-weight pieces, weigh each piece individually. To determine single-piece weight in any other bulk or presort price mailing of identical weight pieces (e.g., IPA or ISAL), weigh a sample group of at least 10 randomly selected pieces and divide the total sample weight by the number of pieces in the sample. Express all single-piece weights in decimal pounds rounded off to four decimal places.

152.32 Rounding Numerical Values

For these standards:

a. *Round off* requires increasing by 1 the last digit to be kept if the digit to its right, which is not to be kept, is 5 or greater. If that digit is 4 or less, the last digit kept is unchanged (e.g., 3.3761 rounded off to two decimal places is 3.38, whereas 3.3741 is 3.37).

b. *Round up* requires increasing by 1 the last digit to be kept if there are any digits to its right, regardless of value (e.g., rounding up either 3.3701 or 3.3791 to two decimal places yields 3.38).

152.4 Permit Imprint

152.41 Conditions of Use

Postage may be paid by permit imprint, subject to the standards in DMM 124, 604, and 705. Postage charges are computed on PS Form 3700. This postage payment method may be used for postage and extra service fees for the following services:

a. Global Express Guaranteed service prepared under 213.8.

b. Express Mail International service prepared under 223.221.

c. Priority Mail International service.

d. First-Class Mail International service.

e. International Priority Airmail (IPA) service.

f. International Surface Air Lift (ISAL) service.

152.42 Place of Mailing

Mail must be deposited and accepted at the Post Office that issued the permit, at a time and place designated by the postmaster, except as otherwise provided for drop shipments.

152.43 Usage Criteria

To use a permit imprint for international mailing purposes, a mailer must enter a minimum of 200 pieces or 50 pounds of mail matter addressed to recipients in foreign countries. All of the mailpieces bearing a permit imprint do *not* have to be addressed to the same destination country. See 292.23 and 293.23 for the minimum quantity requirements that govern the entry of International Priority Airmail (IPA) items and International Surface Air Lift (ISAL) items, respectively.

Note: The 200-piece or 50-pound minimum requirement does not apply to M-bags.

152.44 Required Format

Each mailpiece sent under this payment method must bear a permit imprint indicia showing that postage is paid. Permit imprint indicia must be prepared in one of the formats shown in Exhibit 152.44. No variations or additions — such as Bulk Rate, Media Mail, Presorted Standard, Enhanced Carrier Route Sort, Automation Rate, Nonprofit Organization, or Bound Printed Matter — are allowed. Mailpieces may bear a company permit imprint, in which the exact name of the company or individual holding the permit is shown in the indicium in place of the city, state, and permit number. Mailings prepared with a company permit imprint must comply with the standards in DMM 604.5.3.9.

Exhibit 152.44
Indicia Formats

GLOBAL EXPRESS GUARANTEED

GLOBAL EXPRESS GUARANTEED
US POSTAGE PAID
NEW YORK NY
PERMIT NO. 1

GLOBAL EXPRESS GUARANTEED
US POSTAGE PAID
JOHN DOE COMPANY

EXPRESS MAIL INTENATIONAL

EXPRESS MAIL INTERNATIONAL
US POSTAGE PAID
NEW YORK NY
PERMIT NO. 1

EXPRESS MAIL INTERNATIONAL
US POSTAGE PAID
JOHN DOE COMPANY

PRIORITY MAIL INTERNATIONAL

PRIORITY MAIL INTERNATIONAL
U.S. POSTAGE PAID
WASHINGTON DC
PERMIT NO. 1

PRIORITY MAIL INTERNATIONAL
U.S. POSTAGE PAID
JOHN DOE COMPANY

Exhibit 152.44
Indicia Formats (cont'd)

FIRST-CLASS MAIL INTERNATIONAL (Includes IPA, ISAL, and M-Bags)

BIRMINGHAM AL 35206

FIRST-CLASS MAIL
U.S. POSTAGE
1 OZ
PERMIT NO. 1

MAILED FROM ZIP CODE 35406
MAY 13
2007

FIRST-CLASS MAIL
U.S. POSTAGE
PAID
PERMIT NO. 1

FIRST-CLASS MAIL
INTERNATIONAL

U.S. POSTAGE
PAID
NEW YORK, NY
PERMIT NO. 1

FIRST-CLASS MAIL INTERNATIONAL
U.S. POSTAGE PAID
NEW YORK, NY
PERMIT NO. 1

FIRST-CLASS MAIL INTERNATIONAL
U.S. POSTAGE PAID
MAILED FROM ZIP CODE 60607
PERMIT NO. 1

FIRST-CLASS MAIL INTERNATIONAL
U.S. POSTAGE PAID
JOHN DOE COMPANY

INTL SURFACE AIR LIFT
U.S. POSTAGE PAID
WASHINGTON DC
PERMIT NO. 1

INTL PRIORITY AIRMAIL
U.S. POSTAGE PAID
WASHINGTON DC
PERMIT NO. 1

OFFICIAL MAIL

FIRST-CLASS MAIL
POSTAGE & FEES PAID
AGENCY NAME
PERMIT NO. G-999

POSTAGE & FEES PAID
AGENCY NAME
PERMIT NO. G-999

153 Placement of Postage

a. Postage stamps and postage-paid impressions must be applied to the address side of mail in the upper-right corner. The postage meter stamp, postage validation imprinter (PVI) label, or permit may be affixed directly on the mailpiece or on the wrapper when plastic wrap is used.

b. Nonpostage stamps, labels resembling postage stamps, or impressions resembling postage-paid impressions must *not* be placed on the address side of international mailpieces.

154 Remailed Items

New postage is required when mailpieces are reentered after having been returned to the sender by a foreign postal administration.

This page intentionally left blank

2 Conditions for Mailing

210 Global Express Guaranteed

211 Description and Physical Characteristics

211.1 General

Global Express Guaranteed® (GXG®) service is an international expedited delivery service provided through an alliance with FedEx Express. It provides reliable, high-speed, guaranteed, and day-definite service from selected Post Office facilities in the United States to a large number of international destinations. (See the "Countries and Cities Served" section of Publication 141, *Global Express Guaranteed Service Guide,* for destination service commitments.) Global Express Guaranteed service is guaranteed to meet the specified service standards or the postage paid may be refunded. For almost all network destinations, liability insurance is provided for lost or damaged shipments. See 212.45.

211.2 Physical Characteristics

211.21 Weight Limits

The maximum weight limit for Global Express Guaranteed service is 70 pounds, but lower country-specific weight limits might apply. To determine the maximum weight limit for each country, see the Individual Country Listings.

211.22 Dimensions

211.221 Maximum Size

Maximum size dimensions for Global Express Guaranteed service are noted in the Individual Country Listings; however, dimensions may not exceed the following:

a. Length: 46 inches.

b. Width: 35 inches.

c. Height: 46 inches.

d. Combined length and girth: 108 inches.

211.222 Minimum Size

The surface area of the address side of the item to be mailed must be large enough to completely contain the Global Express Guaranteed Air Waybill/ Shipping Invoice (shipping label), postage, endorsement, and any applicable markings. The shipping label is approximately 5.5 inches high and 9.5 inches long.

212 Eligibility

212.1 General — All Global Express Guaranteed Shipments

Documents and general correspondence (nondutiable items) and non-documents (all dutiable items including merchandise) may be shipped using Global Express Guaranteed service. Mailers must certify that the shipment does not contain any restricted or dangerous goods prohibited by the destination country or postal regulations and does not require the filing of Electronic Export Information (EEI), formerly known as the Shipper's Export Declaration (SED). The maximum value of a Global Express Guaranteed document or non-document shipment is $2,499 or a lesser amount as limited by country, content, or value. The sender is responsible for determining if the item is allowable despite any statement made in Publication 141, on the Global Express Guaranteed Web site, or by a Postal Service employee or the Postal Service's agents.

212.2 Customs Forms Required

PS Form 6182, *Commercial Invoice*, is required for certain commodities and destinations. To determine if PS Form 6182 is required for a specific mailing, refer to the "Documentation Requirement" section of the specific destination country in Publication 141.

212.3 Mail Sealed Against Inspection

Global Express Guaranteed mailpieces containing only documents are sealed against inspection. Global Express Guaranteed mailpieces containing non-documents are not sealed against inspection. Regardless of physical closure, the mailing of Global Express Guaranteed mailpieces containing non-documents constitutes consent by the mailer to inspection of the contents.

212.4 Inquiries, Service Guarantees, Postage Refunds, and Indemnity

212.41 Service Guarantee

The Postal Service guarantees delivery within the service standards specified in Publication 141 or the sender may be entitled to a full refund of the postage paid. For the purpose of the money-back guarantee, the date and time of delivery, attempted delivery, or availability for delivery constitutes delivery.

212.42 Transit Days for Shipments

Transit days are available from participating Post Office facilities, online though Click-N-Ship service, and in the "Countries and Cities Served" section of Publication 141. Total transit days for Global Express Guaranteed service may be affected by factors beyond the Postal Service's control, which may include but are not limited to the following:

a. General customs delays.

b. Specific customs commodity delays.

c. Holidays observed in the destinating country.

212.43 Inquiries

Make inquiries concerning the delivery of Global Express Guaranteed items by calling 800-222-1811 or through the Postal Service Web site at *www.usps.com/shipping/trackandconfirm.htm.*

212.44 Postage Refunds

Postage may be refunded for a shipment accepted at a participating Post Office facility by the specified deposit time and not delivered to the recipient in accordance with the transit times defined in Publication 141. In accordance with the money-back guarantee standards in Publication 141, a refund request may be filed if the carrier at the destination country does not deliver the shipment, does not attempt to deliver the shipment, or does not make the shipment available on or before close of business in the local time zone in the delivery location. To request a refund or obtain details on how to file a claim, contact a customer service representative at 800-222-1811. The original receipt of the Global Express Guaranteed Air Waybill/Shipping Invoice (shipping label) is required for a postage refund. Requests for postage refunds must be made no later than 30 days from the date of mailing. The signature of the recipient or recipient's agent is required upon delivery of the refund. The money-back guarantee does not apply to shipments to post office box addresses acceptable for delivery or other exclusions defined in the "Summary of Our Terms and Conditions" section of Publication 141.

212.45 Global Express Guaranteed Insurance and Indemnity

Document reconstruction insurance (the reasonable costs incurred in reconstructing duplicates of nonnegotiable documents mailed) and non-document insurance for loss or damage up to $100 per shipment are included at no additional charge. (See the Individual Country Listings for availability.) Additional insurance may be purchased for document and non-document shipments (see 212.5). The total cost of document reconstruction or for insurance purchased for non-documents cannot exceed $2,499 or a lesser amount as limited by country, content, or value. Coverage, terms, and limitations are subject to change.

212.46 Indemnity Claims

If a shipment is lost or damaged, the sender may file a claim for document reconstruction costs (for document items) or for the declared value of the shipment costs (for non-document items). The sender must submit all claims within 30 days of the shipment date by contacting a customer service representative at 800-222-1811. The sender must submit all supporting documentation within 9 months of the mailing date. The representative provides more details on how to file a claim. The original receipt of the Global Express Guaranteed Air Waybill/Shipping Invoice may be required when filing a claim. Consult Publication 141 for limitations and restrictions on indemnity payments for Global Express Guaranteed items. The Global Express Guaranteed customer service office adjudicates refunds for Global Express Guaranteed service. Contact the Global Express Guaranteed customer service office at 800-222-1811. The Postal Service makes the final approval and payment.

212.47 Liability for Lost or Damaged Contents

Unless additional insurance is purchased, liability for a lost or damaged Global Express Guaranteed shipment is limited to the lowest of the following:

a. $100.

b. The actual amount of the loss or damage.

c. The actual value of the contents.

"Actual value" means the lowest cost of replacing, reconstructing, or reconstituting the allowable contents of the shipment (determined at the time and place of acceptance).

212.5 Extra Services — Insurance

Additional insurance coverage above $100, up to a maximum of $2,499 may be purchased at the sender's option. Amounts vary by country, content, or value. Coverage, terms, and limitations are subject to change. See the Individual Country Listings for insurance limits. See Notice 123, *Price List*, for the fee schedule for optional Global Express Guaranteed document reconstruction insurance or non-document insurance coverage.

213 Prices and Postage Payment Methods

213.1 Availability and Price Application — General

Global Express Guaranteed shipments are charged postage for each addressed piece according to its weight (or dimensional weight) and zone. See the Individual Country Listings for availability, additional details, and prices.

213.2 Postage Payment Methods — General

Global Express Guaranteed shipments may be paid with postage stamps, postage validation imprinter (PVI) labels, postage meter stamps, information-based indicia (IBI), PC Postage service, or permit imprint under 213.8.

213.3 Determining Postage for Global Express Guaranteed Service

213.31 USPS-Produced Global Express Guaranteed Envelopes

Postage for items mailed in USPS-produced Global Express Guaranteed envelopes is based on the weight of the piece. For items weighing 0.5 pound or less, the postage is the 0.5-pound price. For all other items, the postage is charged per pound or fraction thereof — any fraction of a pound is rounded up to the next whole pound.

213.32 Mailer-Supplied Packaging

Postage for items not mailed in USPS-produced Global Express Guaranteed envelopes is based on the dimensional weight, as calculated under 213.4, or the per-pound weight or fraction thereof rounded up to the next whole pound, whichever is greater.

213.4 Dimensional Weight

213.41 Determining Dimensional Weight for a Rectangular-Shaped Parcel

Follow these steps to determine the dimensional weight for a rectangular-shaped parcel:

a. Determine the length, width, and height in inches. Round off each measurement to the nearest whole inch.

b. Multiply the length by the width by the height.

c. Divide the result by 166. For weights less than 0.5 pound, round up to 0.5 pound. For all other weights, round up to the next whole pound.

213.42 Determining Dimensional Weight for a Nonrectangular-Shaped Parcel

Follow these steps to determine the dimensional weight for a nonrectangular-shaped parcel:

a. Determine the length, width, and height in inches. Measure the length, width, and height at their extreme dimensions. Round off each measurement to the nearest whole inch.

b. Multiply the length by the width by the height.

c. Multiply the result by an adjustment factor of 0.785.

d. Divide the result by 166. For weights less than 0.5 pound, round up to 0.5 pound. For all other weights, round up to the next whole pound.

213.5 Destinating Countries and Price Groups

Global Express Guaranteed service is available to the destinating countries and territories listed in Exhibit 213.5. Countries are placed into one of eight price groups.

Exhibit 213.5
Destinating Countries and Price Groups

** Only documents may be sent to a country marked with an asterisk.*

Country Name	GXG Price Group
Afghanistan	6
Albania	4
Algeria	4
Andorra*	5
Angola	4
Anguilla	7
Antigua and Barbuda	7
Argentina	8
Armenia	4
Aruba	7
Ascension	No Service
Australia	6
Austria	5
Azerbaijan	4
Bahamas	7
Bahrain	6
Bangladesh	6
Barbados	7
Belarus	4
Belgium	3
Belize	8
Benin	4
Bermuda	7
Bhutan	6
Bolivia	8
Bosnia-Herzegovina	4
Botswana	4
Brazil	8
British Virgin Islands	7
Brunei Darussalam	4
Bulgaria	4
Burkina Faso	4
Burma (Myanmar)	No Service
Burundi	4
Cambodia	8
Cameroon	4
Canada	1
Cape Verde	4
Cayman Islands	7
Central African Republic	No Service
Chad	4

Country Name	GXG Price Group
Chile	8
China	6
Colombia	8
Comoros	No Service
Congo, Democratic Republic of the	4
Congo, Republic of the	4
Costa Rica	8
Cote d'Ivoire (Ivory Coast)	4
Croatia	4
Cuba	No Service
Cyprus	6
Czech Republic	4
Denmark	5
Djibouti	4
Dominica	7
Dominican Republic	7
Ecuador	8
Egypt	6
El Salvador	8
Equatorial Guinea	No Service
Eritrea	4
Estonia	4
Ethiopia	4
Falkland Islands	No Service
Faroe Islands	5
Fiji	8
Finland	5
France	3
French Guiana	8
French Polynesia	4
Gabon	4
Gambia	4
Georgia, Republic of	4
Germany	3
Ghana	4
Gibraltar	4
Great Britain and Northern Ireland	3
Greece	5
Greenland	5
Grenada	7
Guadeloupe	7
Guatemala	8
Guinea	4
Guinea-Bissau	No Service

Country Name	GXG Price Group
Guyana	8
Haiti	7
Honduras	8
Hong Kong	3
Hungary	4
Iceland	5
India	6
Indonesia	6
Iran	No Service
Iraq	6
Ireland (Eire)	3
Israel	6
Italy	3
Jamaica	7
Japan	3
Jordan	6
Kazakhstan	4
Kenya	4
Kiribati	No Service
Korea, Democratic People's Rep. of (North)	No Service
Korea, Republic of (South)	6
Kosovo, Republic of	4
Kuwait	6
Kyrgyzstan	4
Laos	8
Latvia	4
Lebanon	6
Lesotho	4
Liberia	4
Libya	4
Liechtenstein	5
Lithuania	4
Luxembourg	3
Macao	3
Macedonia, Republic of	4
Madagascar	4
Malawi	4
Malaysia	6
Maldives	6
Mali	4
Malta	5
Martinique	7
Mauritania	4
Mauritius	4

Country Name	GXG Price Group
Mexico	2
Moldova	4
Mongolia	4
Montenegro	4
Montserrat	7
Morocco	4
Mozambique	4
Namibia	4
Nauru	No Service
Nepal	6
Netherlands	3
Netherlands Antilles	7
New Caledonia	8
New Zealand	6
Nicaragua	8
Niger	4
Nigeria	4
Norway	5
Oman	6
Pakistan	6
Panama	8
Papua New Guinea	8
Paraguay	8
Peru	8
Philippines	6
Pitcairn Island	No Service
Poland	4
Portugal	5
Qatar	6
Reunion	4
Romania	4
Russia	4
Rwanda	4
Saint Christopher and Nevis	7
Saint Helena	No Service
Saint Lucia	7
Saint Pierre and Miquelon	No Service
Saint Vincent and the Grenadines	7
San Marino	3
Sao Tome and Principe	No Service
Saudi Arabia	4
Senegal	4
Serbia, Republic of	4
Seychelles	4

Country Name	GXG Price Group
Sierra Leone	No Service
Singapore	3
Slovak Republic (Slovakia)	4
Slovenia	4
Solomon Islands	No Service
Somalia	No Service
South Africa	4
Spain	5
Sri Lanka	6
Sudan	No Service
Suriname	8
Swaziland	4
Sweden	5
Switzerland	5
Syrian Arab Republic (Syria)	No Service
Taiwan	3
Tajikistan	No Service
Tanzania	4
Thailand	6
Togo	4
Tonga	4
Trinidad and Tobago	7
Tristan da Cunha	No Service
Tunisia	4
Turkey	6
Turkmenistan	No Service
Turks and Caicos Islands	7
Tuvalu	No Service
Uganda	4
Ukraine	4
United Arab Emirates	6
Uruguay	8
Uzbekistan	4
Vanuatu	8
Vatican City	3
Venezuela	8
Vietnam	6
Wallis and Futuna Islands	4
Western Samoa	No Service
Yemen	6
Zambia	4
Zimbabwe	4

213.6 Commercial Prices

213.61 Commercial Base Prices

Global Express Guaranteed commercial base prices are generally less than Global Express Guaranteed retail prices when postage is paid using any of the online methods described in 213.7 or a permit imprint under 213.8. Commercial base pricing does not apply to participating retail Post Office locations. See Notice 123, *Price List*, for the applicable price.

213.62 Commercial Plus Prices

213.621 General

For approved mailers, Global Express Guaranteed commercial plus prices are generally less than Global Express Guaranteed commercial base prices when postage is paid by a registered end-user of a USPS-approved PC Postage product, or a permit imprint under 213.8. Commercial plus pricing does not apply to participating retail Post Office locations. See Notice 123, *Price List*, for the applicable price.

213.622 Commercial Plus Pricing — Eligibility

To qualify for commercial plus pricing, customers must agree to all terms and conditions in a standardized agreement with the Postal Service and tender at least $100,000 per year of international expedited products. For this purpose, “international expedited products” includes any combination of Global Express Guaranteed, Express Mail International, or Priority Mail International items.

213.623 Commercial Plus Pricing — Approval

Mailers meeting the minimum revenue thresholds under 213.622 must complete an agreement with the Postal Service by contacting their account manager, or USPS Global Business via e-mail at *globalcpp@usps.gov,* for a commitment agreement form or for additional information.

213.7 Online Postage Payment Method

213.71 Online Prices

For selected destination countries, Global Express Guaranteed items qualify for discounted prices (equal to the commercial base price or commercial plus price) when mailers use one of the following online shipping methods:

a. Commercial Base Price: Click-N-Ship service; or registered end-users of USPS-approved PC Postage products.

b. Commercial Plus Price: Registered end-users of USPS-approved PC Postage products.

The commercial base or commercial plus price is automatically applied to each shipment when using one of the postage payment methods above. The discount applies only to the postage portion of the Global Express Guaranteed price. It does not apply to any other charges or fees, such as fees for Pickup on Demand service, insurance, or shipments made under a customized agreement.

213.72 Markings Requirements

Global Express Guaranteed mailpieces claiming the commercial base or commercial plus price paid with PC Postage must bear the appropriate price marking, printed on the piece or produced as part of the PC Postage indicia. Mailers must place the applicable marking directly above, directly below, or to the left of the postage using one of the following formats:

a. Commercial Base Price, Commercial Base Pricing, or ComBasPrice.

b. Commercial Plus Price, Commercial Plus Pricing, or ComPlsPrice.

213.73 Determining Online Prices

For each addressed mailpiece, refer to Notice 123, *Price List*, for the applicable commercial base or commercial plus price.

213.74 Notification

For shipments paid online with Click-N-Ship service, an e-mail notification is provided to each customer showing the applicable postage amount, acceptance time, and date.

213.75 Postage Adjustments of Online Shipments

Use of the online service is subject to subsequent verification of the shipment's payment, weight, and time of entry upon acceptance by the Postal Service. Shortpaid Global Express Guaranteed (GXG) shipments paid with Click-N-Ship service is collected automatically through this system (see 423.21).

213.76 Deposit of Online Shipments within 24 Hours

Customers paying postage online must enter their shipment via any of the methods outlined in 215.21 within 24 hours of the time when the label is printed or the transaction is voided.

213.8 Permit Imprint

213.81 Permit Imprint — General

Global Express Guaranteed items paid with a permit imprint through an advance deposit account is permitted only when requirements for commercial base prices or commercial plus prices (see 213.82) are followed. Postage paid with a permit imprint is subject to the general conditions in IMM 152.4 and in DMM 604 and 705. See Notice 123, *Price List*, for the applicable prices.

213.82 Permit Imprint — Commercial Base or Commercial Plus Prices

Global Express Guaranteed commercial base or commercial plus prices are generally less than Global Express Guaranteed retail prices when postage is paid using a permit imprint. The commercial base or commercial plus price applies only to the postage portion of Global Express Guaranteed prices. See Notice 123, *Price List*, for the applicable price. In addition, customers must meet the following requirements:

a. Use USPS-produced Global Shipping Software (GSS). (To request information about GSS, send an e-mail to *GSSHelp@usps.gov*.)

b. Pay for postage with a permit imprint through an advance deposit account.

c. Meet manifesting and permit imprint requirements under IMM 152.4 and DMM 604 and the manifesting requirements under DMM 705.

Note: When using GSS, no extra services such as insurance are available.

213.9 Official Mail

213.91 Mailings by Federal Agencies

Global Express Guaranteed shipments that are entered by federal agencies and departments are subject to the same standards under 210 as Global Express Guaranteed shipments that are entered by nongovernmental entities.

213.92 Postal Service Mailings

Global Express Guaranteed shipments that are entered by U.S. Postal Service entities are subject to the same standards under 210 as Global Express Guaranteed shipments that are entered by nongovernmental entities, except that U.S. Postal Service mailings must bear the G-10 permit indicia that are prescribed for all Postal Service official mail. See 142.2.

214 Mail Preparation

214.1 Preparation by the Sender

Prior to mailing, the sender must do the following:

a. Prepare the item as a large envelope (flat) or package using either a Global Express Guaranteed envelope provided by the Postal Service or mailer-supplied packaging. Mailers using their own envelope or wrapping must also affix a Global Express Guaranteed sticker (Item 107PGG3) to the front and back of the item.

b. Complete the Global Express Guaranteed Air Waybill/Shipping Invoice (Item 11FGG1) to show the complete address of the sender and addressee. Do not address items to APO or FPO addresses. Post Office box addresses may be allowed for certain international locations. See Publication 141 for information about areas served in the destination country.

c. Complete the shipment details to show the contents in detail. For documents, include the estimated cost of reconstruction. For non-documents, include a valuation and country of manufacture. Shipments cannot have a value that exceeds $2,499, or a lower value set by the destinating country. Sign and date each Global Express Guaranteed shipment on the mailer agreement.

d. Enclose the Global Express Guaranteed Air Waybill/Shipping Invoice (Item 11FGG1) and, if applicable, PS Form 6182 into PS Form 2976-E (plastic envelope). Apply the self-adhesive PS Form 2976-E with its contents to the address side of the mailpiece.

214.2 Preparation by Acceptance Employee

Prior to acceptance, Postal Service acceptance employees must do the following:

a. Check that the sender has properly completed the Global Express Guaranteed Air Waybill/Shipping Invoice.

b. Complete the postage transaction if the item is not prepaid.

c. Complete the “Origin” information.

d. Remove the customer’s copy of the Global Express Guaranteed Air Waybill/Shipping Invoice and give it to the customer. Process the Global Express Guaranteed Air Waybill/Shipping Invoice according to directions on the shipping document.

215 Mail Entry and Deposit

215.1 Entry Service Areas — U.S. Origins

Global Express Guaranteed items must be entered through selected Post Office facilities that are located in the ZIP Code areas listed in Exhibit 215.1. Not all facilities within a 3-digit ZIP Code area accept Global Express Guaranteed items. Check with a local Post Office facility for the nearest participating facilities.

Exhibit 215.1
Global Express Guaranteed: Participating 3-Digit ZIP Codes

State	Code	ZIP Code Areas
Alabama	AL	350, 351, 352, 354–369
Alaska	AK	995–999
Arizona	AZ	850–853, 855–857, 859, 860, 863–865
Arkansas	AR	716–729
California	CA	900, 902–908, 910–928, 930–937, 939–941, 943–961
Colorado	CO	800–816
Connecticut	CT	060–069
Delaware	DE	197–199
District of Columbia	DC	200, 202, 203, 205
Florida	FL	320–339, 341, 342, 344, 346, 347, 349
Georgia	GA	300–319, 398
Hawaii	HI	968
Idaho	ID	832–838
Illinois	IL	600–620, 622–629
Indiana	IN	460–479
Iowa	IA	500–508, 510–516, 520–528
Kansas	KS	660–662, 664–679
Kentucky	KY	400–418, 420–427
Louisiana	LA	700, 701, 703–708, 710–714
Maine	ME	039–049
Maryland	MD	206–212, 214–219
Massachusetts	MA	010–027
Michigan	MI	480–499
Minnesota	MN	550, 551, 553, 554, 556–567
Mississippi	MS	386–397
Missouri	MO	630, 631, 633–641, 644–648, 650–658
Montana	MT	590–599
Nebraska	NE	680, 681, 683–693
Nevada	NV	890, 891, 893–895, 897, 898
New Hampshire	NH	030–038
New Jersey	NJ	070–089
New Mexico	NM	870, 871, 873–875, 877–884
New York	NY	100–149
North Carolina	NC	270–289
North Dakota	ND	580–588
Ohio	OH	430–458
Oklahoma	OK	730, 731, 734–741, 743–749
Oregon	OR	970–979
Pennsylvania	PA	150–191, 193–196
Puerto Rico	PR	006–009
Rhode Island	RI	028, 029
South Carolina	SC	290–299
South Dakota	SD	570–577
Tennessee	TN	370–374, 376–385
Texas	TX	750–770, 772–799
Utah	UT	840, 841, 843–847
Vermont	VT	050–054, 056–058
Virgin Islands	VI	008
Virginia	VA	201, 220–246
Washington	WA	980–986, 988–994
West Virginia	WV	247–268
Wisconsin	WI	530–532, 534, 535, 537–549
Wyoming	WY	820–831

215.2 Place of Mailing

215.21 Items Paid With Methods Other Than Postage Stamps

Global Express Guaranteed shipments paid with online postage, postage meters, or information-based indicia (IBI) may be deposited by one of the following methods:

a. At a retail counter of any participating Global Express Guaranteed Post Office facility.

b. Through Pickup on Demand service (see 215.3).

c. Through Carrier Pickup service (see 215.4).

d. In a Postal Service Express Mail collection box served by a participating Global Express Guaranteed Post Office facility.

215.22 Items Weighing 13 Ounces or Less and Paid With Postage Stamps

Global Express Guaranteed shipments weighing 13 ounces or less and bearing only postage stamps may be deposited by one of the following methods:

a. At a retail counter of any participating Global Express Guaranteed Post Office facility.

b. Through Pickup on Demand service (see 215.3).

c. Through Carrier Pickup service (see 215.4).

d. In a Postal Service Express Mail collection box served by a participating Global Express Guaranteed Post Office facility.

215.23 Items Weighing More Than 13 Ounces and Paid With Postage Stamps

A customer may *not* deposit a Global Express Guaranteed item weighing more than 13 ounces and bearing only postage stamps into a collection box, Postal Service lobby drop, Automated Postal Center (APC) drop, or customer mailbox, or at a Postal Service dock or other unattended location. In addition, these mailpieces are precluded from Pickup on Demand service under 215.3 and Carrier Pickup service under 215.4. Customers must present such items to an employee at a Post Office retail service counter. The Postal Service will return improperly presented items to the sender for proper entry and acceptance.

215.24 Acceptance of Shipments

For purposes of computing the delivery guarantee, Postal Service acceptance of a Global Express Guaranteed shipment occurs when it is received and scanned at a participating Global Express Guaranteed Post Office facility. Collection box deposit and Carrier Pickup service do not constitute Postal Service acceptance of a Global Express Guaranteed shipment. Acceptance occurs when the shipment is brought back to the Post Office facility and the acceptance office performs a retail system scan and verifies the weight, dimensions, and postage of the shipment. For items paid with Click-N-Ship service, the customer will receive an e-mail

verification of the acceptance date, time, and weight, as well as a verification of the amount of postage applicable for the shipment.

Note: Customers paying postage online must enter their shipment via any of the authorized methods outlined in 215.21 within 24 hours of the time when the label is printed, or the transaction will be void.

215.3 Pickup On Demand Service

Subject to the standards in 215.2, Pickup On Demand service is available for Global Express Guaranteed items. There is a single charge for Pickup On Demand service (see Notice 123, Price List), regardless of the number of items scheduled for pickup. A pickup can include any or all of the following items:

a. Global Express Guaranteed items.

b. Express Mail International items.

c. Priority Mail International items.

d. Express Mail items.

e. Priority Mail items.

f. Package Services items.

215.4 Carrier Pickup Service

No pickup fee is charged when a Global Express Guaranteed item or items are picked up during a letter carrier's regular delivery stop or during a scheduled stop made to collect other mail not subject to a pickup fee. Pickup service is provided in accordance with the information in DMM 507.6; for more information, also visit the online site at *usps.com/pickup*.

220 Express Mail International

221 Description and Physical Characteristics

221.1 General

Express Mail International is a reliable high-speed mail service available to certain countries (see the Individual Country Listings for service availability). Express Mail International service is available at designated Postal Service facilities authorized to accept domestic Express Mail shipments.

221.2 Express Mail International With Guarantee Service

Express Mail International With Guarantee service offers a date-certain, postage-refund guarantee. This postage-refund guarantee is not available for items paid via a permit imprint under 223.221. This service is available only to the following countries:

a. Australia.

b. China.

c. France (does not include Corsica and Monaco).

d. Great Britain and Northern Ireland.

e. Hong Kong.

f. Japan.

g. Republic of Korea (South Korea).

h. Singapore.

i. Spain (does not include Canary Islands).

221.3 Express Mail International Flat Rate Envelopes

Only USPS-produced Express Mail International Flat Rate Envelopes are eligible for the Flat Rate price and are charged a flat rate regardless of destination. The maximum weight is 20 pounds. See the Individual Country Listings for countries that offer Express Mail International service.

221.4 Express Mail International Flat Rate Boxes

Only USPS-produced Express Mail International Flat Rate Boxes are eligible for the Flat Rate price and are charged a flat rate regardless of destination. The maximum weight is 20 pounds. See the Individual Country Listings for countries that offer Express Mail International service.

221.5 Physical Characteristics

221.51 Weight Limits

The maximum weight limit for Express Mail International service is 70 pounds, but lower country-specific weight limits might apply. To determine the maximum weight limit for each country, see the Individual Country Listings.

221.52 Dimensions — Express Mail International Parcels

Maximum size dimensions for Express Mail International service vary by country and are noted in the Individual Country Listings. See Exhibit 231.23 for determining length or length and girth combined for rectangular and nonrectangular parcels.

222 Eligibility

222.1 General — All Express Mail International Shipments

Except for the items noted in 222.2, any item not prohibited in international mail may be sent using Express Mail International service. For additional individual country prohibitions, refer to the “Country Conditions for Mailing” in the Individual Country Listings.

222.2 Prohibited Items in All Express Mail International Shipments

The following items are prohibited in all Express Mail International shipments:

a. Coins.

b. Banknotes.

c. Currency notes, including paper money.

d. Securities of any kind payable to bearer.

e. Traveler’s checks.

f. Platinum, gold, and silver.

g. Precious stones.

h. Jewelry.

i. Watches.

j. Other valuable articles.

Note: International postal money orders are admissible in Express Mail International shipments, but they are negotiable only if the proper form is used.

222.3 Express Mail International Flat Rate Envelopes

Mailers are eligible for the Flat Rate Envelope price only with the use of the USPS-produced Express Mail Flat Rate Envelope (Item EP13-F — 12-1/2 inches by 9-1/2 inches) or the Express Mail Legal Flat Rate Envelope (Item EP13-L — 15 inches by 9-1/2 inches). The contents must fit securely in the envelope and be confined within the envelope, with the provided adhesive as the means of closure. The envelope flap must be able to close within the prefabricated folds. Tape may be applied to the flap and seams for closure or to reinforce the envelope, provided the design of the envelope is not enlarged by opening the sides of the envelope and taping or reconstructing the envelope in any way. All other Express Mail International standards and customs requirements apply.

222.4 Express Mail International Flat Rate Boxes

Only USPS-produced Express Mail International Flat Rate Boxes are eligible for Flat Rate pricing as defined in Exhibit 222.4. The contents must fit securely and must be entirely confined within the box. The box flaps must be able to close within the prefabricated folds. Tape may be applied to the flap and seams for closure or reinforcement, provided the design of the container is not enlarged by opening the sides and taping or reconstructing the container in any way. All other Express Mail International standards and customs requirements apply.

Note: The USPS-produced Express Mail International Flat Rate Box, Item EM-FRB1, is nonmailable when paid at the retail price using shipping Label 11-B, *Express Mail Post Office to Addressee,* due to size constraints and to ensure compliance with 123.61b. This standard does not apply when payment is made using a permit imprint under 223.22 or online postage under 223.24.

Exhibit 222.4
Eligible Express Mail International Flat Rate Boxes

Item	Inside Dimensions (L x W x H)	Outside Dimensions (L x W x H)	Item No.
Express Mail International Flat Rate Box	11" x 8-1/2" x 5-1/2"	11-1/4" x 8-3/4" x 6"	EM-FRB1 *
Express Mail International Flat Rate Box	13-5/8" x 11-7/8" x 3-3/8"	14" x 12" x 3-1/2"	EM-FRB2

* *Nonmailable when paid at the retail price using shipping Label 11-B,* Express Mail Post Office to Addressee.

222.5 Customs Forms Required

See the Individual Country Listings for countries that offer Express Mail International service. Mailers are responsible for determining customs requirements and complying with them. Before mailing merchandise, mailers should confirm whether an import license is required for that class of goods.

222.6 Mail Sealed Against Inspection

Express Mail International mailpieces are sealed against inspection.

222.7 Express Mail International Insurance and Indemnity

222.71 Merchandise Insurance

Express Mail International shipments containing merchandise are insured against loss, damage, or missing contents up to $100 at no additional charge. Indemnity is paid by the U.S. Postal Service as provided in 935 and in DMM 503 and 609. Additional insurance coverage up to a maximum of $5,000 may be purchased at the sender's option (see 222.8).

222.72 Document Reconstruction Insurance

Express Mail International shipments containing nonnegotiable documents are insured against loss, damage, or missing contents up to $100 at no additional charge. Indemnity is paid by the U.S. Postal Service as provided in 935 and in DMM 503 and 609.

222.73 Indemnity for Delivery Delays

Express Mail International items are not insured against delay in delivery, and indemnity payments are not made in the event of delay. Postage *refunds* for delay are considered only for shipments sent to countries with Express Mail International With Guarantee service under 221.2.

222.8 Extra Services — Merchandise Insurance

Additional merchandise insurance coverage above $100, up to a maximum of $5,000, may be purchased at the sender's option. See the Individual Country Listings for merchandise insurance limits. See Notice 123, *Price List,* for the fee schedule for optional Express Mail International merchandise insurance coverage.

223 Prices and Postage Payment Methods

223.1 Prices

223.11 Availability and Price Application — General

Except under 223.14 and 223.15, Express Mail International shipments are charged postage for each addressed piece according to its weight and country price group. For shipments presented in Express Mail pouches under an Express Mail Custom Designed Service agreement, each pouch is considered an addressed piece. See the Individual Country Listings for countries that offer Express Mail International service. Refer to Notice 123, *Price List*, for applicable Express Mail International prices.

223.12 Commercial Base Prices

Express Mail International commercial base prices are generally less than Express Mail International retail prices when postage is paid using a permit imprint under 223.222 or the online methods described in 223.241.

223.13 Commercial Plus Prices

For approved mailers, Express Mail International commercial plus prices are generally less than Express Mail International commercial base prices when postage is paid by a registered end-user of a USPS-approved PC Postage product, or a permit imprint under 223.222.

223.131 Commercial Plus Pricing — Eligibility

To qualify for commercial plus pricing, customers must agree to all terms and conditions in a standardized agreement with the Postal Service and tender at least $100,000 per year of international expedited products. For this purpose, "international expedited products" includes any combination of Global Express Guaranteed, Express Mail International, or Priority Mail International items.

223.132 Commercial Plus Pricing — Approval

Mailers meeting the minimum revenue thresholds under 223.131 must complete an agreement with the Postal Service by contacting their account manager, or USPS Global Business via e-mail at *globalcpp@usps.gov,* for a commitment agreement form or for additional information.

223.14 Express Mail International Flat Rate Envelope Prices

Only USPS-produced Express Mail International Flat Rate Envelopes are eligible for a Flat Rate price regardless of the destination. The maximum weight is 20 pounds. Postage is required for each piece (see Notice 123, *Price List)*. A domestic Express Mail Flat Rate Envelope with prepaid postage may also be used for an Express Mail International item provided that appropriate additional postage is added before mailing.

223.15 Express Mail International Flat Rate Boxes Prices

Only USPS-produced Express Mail International Flat Rate Boxes are eligible for a Flat Rate price regardless of the destination. The maximum weight is 20 pounds. Postage is required for each piece (see Notice 123, *Price List)*.

223.2 Postage Payment Methods

223.21 General

Express Mail International shipments may be paid with postage stamps, postage validation imprinter (PVI) labels, postage meter stamps, information-based indicia (IBI), PC Postage service, or a permit imprint under 223.22, or through the use of an Express Mail corporate account (EMCA). A written application is required prior to mailing with an Express Mail corporate account (see DMM 414.2).

223.22 Permit Imprint

223.221 Permit Imprint — General

Payment for Express Mail International shipments paid with a permit imprint through an advance deposit account is permitted only when requirements for

commercial base prices or commercial plus prices (see 223.222) are followed. Postage paid with a permit imprint is subject to the general conditions in IMM 152.4 and in DMM 604 and 705. See Notice 123, *Price List*, for the applicable prices.

223.222 **Permit Imprint — Commercial Base or Commercial Plus Prices**

Express Mail International commercial base and commercial plus prices are generally less than Express Mail International retail prices when postage is paid using a permit imprint. The commercial base price applies only to the postage portion of Express Mail International prices. In addition, customers must meet the following requirements:

a. Use USPS-produced Global Shipping Software (GSS). (To request information about GSS, send an e-mail to *GSSHelp@usps.gov*.)

b. Pay for postage with a permit imprint through an advance deposit account.

c. Meet manifesting and permit imprint requirements under IMM 152.4 and DMM 604 and the manifesting requirements under DMM 705.

Note: When using GSS, no extra services such as insurance are available.

223.23 Express Mail Corporate Account

Mailers using an Express Mail corporate account under 223.21 must pay the applicable retail price for each mailpiece.

223.24 Online Postage Payment Method

223.241 **Online Prices**

For selected destination countries, Express Mail International items qualify for discounted prices (equal to the commercial base price or commercial plus price) when mailers use one of the following online shipping methods:

a. Commercial Base Price: Click-N-Ship service; or registered end-users of USPS-approved PC Postage products.

b. Commercial Plus Price: Registered end-users of USPS-approved PC Postage products.

The commercial base or commercial plus price is automatically applied to each shipment when using one of the above postage payment methods. The discount applies only to the postage portion of the Express Mail International price. It does not apply to any other charges or fees, such as fees for Pickup on Demand service, insurance, or shipments made under a customized agreement.

223.242 **Markings Requirements**

Express Mail International mailpieces claiming the commercial base or commercial plus price paid with PC Postage must bear the appropriate price marking, printed on the piece or produced as part of the PC Postage indicia. Mailers must place the applicable marking directly above, directly below, or to the left of the postage using one of the following formats:

a. Commercial Base Price, Commercial Base Pricing, or ComBasPrice.

b. Commercial Plus Price, Commercial Plus Pricing, or ComPlsPrice.

223.243 Determining Online Prices

For each addressed mailpiece, refer to Notice 123, *Price List*, for the applicable commercial base or commercial plus price.

223.3 Official Mail

223.31 Mailings by Federal Agencies

Express Mail International shipments that are entered by federal agencies and departments are subject to the same standards under 220 as Express Mail International shipments that are entered by nongovernmental entities.

223.32 Postal Service Mailings

Express Mail International shipments that are entered by U.S. Postal Service entities are subject to the same standards under 220 as Express Mail International shipments that are entered by nongovernmental entities, except that U.S. Postal Service mailings must bear the G-10 permit indicia that are prescribed for all Postal Service official mail. See 142.2.

224 Mail Preparation

224.1 Preparation by Sender

Prior to mailing, the sender must do the following:

a. Complete the “From” and “To” portions of Label 11-B, *Express Mail Post Office to Addressee*, or the online label for each piece of mail and affix the completed label to each piece.

b. Prepare and affix the appropriate customs form to the piece of mail. For required customs forms, see the Individual Country Listings for countries that offer Express Mail International service.

224.2 Preparation by Acceptance Employee

Prior to acceptance, employees must do the following:

a. Check the address label to ensure that the sender has completed the “From” and “To” portions.

b. Verify that the customer has properly completed the appropriate customs form, if required.

c. Enter the originating facility ZIP Code, date and time received, weight, merchandise insurance fee (if applicable — see 222.71 and 222.72), total postage, and initials. Ensure that the correct amount of postage is affixed to the mailpiece.

d. Give the Customer Receipt copy to the mailer and retain the Finance Copy. Peel off the backing of the remaining portion and affix it to the item. For online shipments, customer receipts are not necessary; for non-IRT or non-POS offices, record the required finance information on the special form provided for this purpose.

e. After acceptance, place each item in the appropriate working pouch and forward it to the international exchange office authorized to dispatch Express Mail International shipments to that destination. (See Handbook T-5, *International Mail Operations*.)

225 Mail Entry and Deposit

225.1 Place of Mailing

225.11 Items Requiring a Completed Customs Declaration

Except as provided in 225.12, a mailer may not deposit an Express Mail International item that requires a completed customs form into a collection box, Postal Service lobby drop, Automated Postal Center (APC) drop, or customer mailbox, or at a Postal Service dock or other unattended location.

In addition, these mailpieces are precluded from Pickup on Demand service under 225.2 and Carrier Pickup service under 225.3. Customers must present such items to an employee at a Post Office retail service counter. Customers who enter volume mailings paid with a permit imprint under 223.22 must enter such items through a business mail entry unit (BMEU) or, when authorized by the district BMEU manager, through a detached mail unit (DMU) at a mailer's plant. The Postal Service will return improperly presented items to the sender for proper entry and acceptance.

225.12 Exceptional Items Requiring a Completed Customs Declaration

Express Mail International items paid through an Express Mail corporate account (EMCA), or items that have the mailing label, customs form (including an electronic round stamp), and postage prepared and paid online through Click-N-Ship service on usps.com, the eBay integrated shipping solution, or an authorized PC Postage vendor Web site, may be deposited by one of the following methods:

a. At a Postal Service retail counter.

b. Through Pickup on Demand service (see 225.2).

c. Through Carrier Pickup service (see 225.3).

d. Into a Postal Service lobby drop.

e. Into an Automated Postal Center (APC) drop.

f. In a collection box.

g. In a customer mailbox.

225.13 Items Not Requiring a Customs Declaration

225.131 Items Weighing 13 Ounces or Less and Paid With Postage Stamps

An Express Mail International item weighing 13 ounces or less, bearing only postage stamps, and not requiring a customs declaration (see the applicable Individual Country Listing) may be deposited by one of the following methods:

a. At a Postal Service retail counter.

b. Through Pickup on Demand service (see 225.2).

c. Through Carrier Pickup service (see 225.3).

d. Into a Postal Service lobby drop.

e. Into an Automated Postal Center (APC) drop.

f. In a collection box.

g. In a customer mailbox.

225.132 **Items Weighing More Than 13 Ounces and Paid With Postage Stamps**

A customer may *not* deposit an Express Mail International item weighing more than 13 ounces, bearing only postage stamps, and not requiring a customs declaration (see the applicable Individual Country Listing) into a collection box, Postal Service lobby drop, Automated Postal Center (APC) drop, or customer mailbox, or at a Postal Service dock or other unattended location. In addition, these mailpieces are precluded from Pickup on Demand service under 225.2 and Carrier Pickup service under 225.3. Customers must present such items to an employee at a Post Office retail service counter. The Postal Service will return improperly presented items to the sender for proper entry and acceptance.

225.133 **Items Paid With Methods Other Than Postage Stamps**

An Express Mail International item paid with online postage, postage meters, or information-based indicia (IBI) and not requiring a customs declaration (see the applicable Individual Country Listing) may be deposited by one of the following methods:

a. At a Postal Service retail counter.

b. Through Pickup on Demand service (see 225.2).

c. Through Carrier Pickup service (see 225.3).

d. Into a Postal Service lobby drop.

e. Into an Automated Postal Center (APC) drop.

f. In a collection box.

g. In a customer mailbox.

225.2 Pickup On Demand Service

Subject to the standards in 225.1, Pickup On Demand service is available for Express Mail International items. There is a single charge for Pickup On Demand service (see Notice 123, *Price List*), regardless of the number of items scheduled for pickup. A pickup can include any or all of the following items:

a. Global Express Guaranteed items.

b. Express Mail International items.

c. Priority Mail International items.

d. Express Mail items.

e. Priority Mail items.

f. Package Services items.

225.3 Carrier Pickup Service

No pickup fee is charged when an Express Mail International item or items are picked up during a letter carrier's regular delivery stop or during a scheduled stop made to collect other mail not subject to a pickup fee. Pickup service is provided in accordance with the information in DMM 507.6; for more information, also visit the online site at *usps.com/pickup*.

230 Priority Mail International

231 Description and Physical Characteristics

231.1 General

Priority Mail International service is considered a parcel stream for mail exchange purposes, with the exception of Flat Rate Envelopes and the Small Flat Rate Priced Boxes.

231.2 Physical Characteristics

231.21 Weight Limits

231.211 Priority Mail International Flat Rate Envelopes and Small Flat Rate Priced Boxes

The maximum weight for items mailed using Flat Rate Envelopes and Small Flat Rate Priced Boxes is 4 pounds.

231.212 Priority Mail International Medium and Large Flat Rate Boxes

The weight limit for items mailed using the Medium and Large Flat Rate Boxes is 20 pounds.

231.213 Priority Mail International Ordinary Parcels

The maximum weight limit for Priority Mail International service is 70 pounds, but lower country-specific weight limits might apply. To determine the maximum weight limit for each country, see the Individual Country Listings.

231.22 Dimensions — Priority Mail International Parcels

The minimum and maximum dimensions for Priority Mail International parcels are as follows:

a. For all parcels, the minimum length and width is 5-1/2 inches by 3-1/2 inches.

b. The maximum size dimensions for Priority Mail International parcels vary by country and are noted in the Individual Country Listings. See 231.23 for determining length or length and girth combined for rectangular and nonrectangular parcels.

231.23 Measuring Parcel Dimensions

For all parcels, length is the longest side of the parcel, and girth is the measurement around the thickest part that is perpendicular to the length. The following examples can assist mailers in determining length or length and girth combined for rectangular and nonrectangular parcels. See Exhibit 231.23.

Exhibit 231.23
Measuring Parcel Dimensions

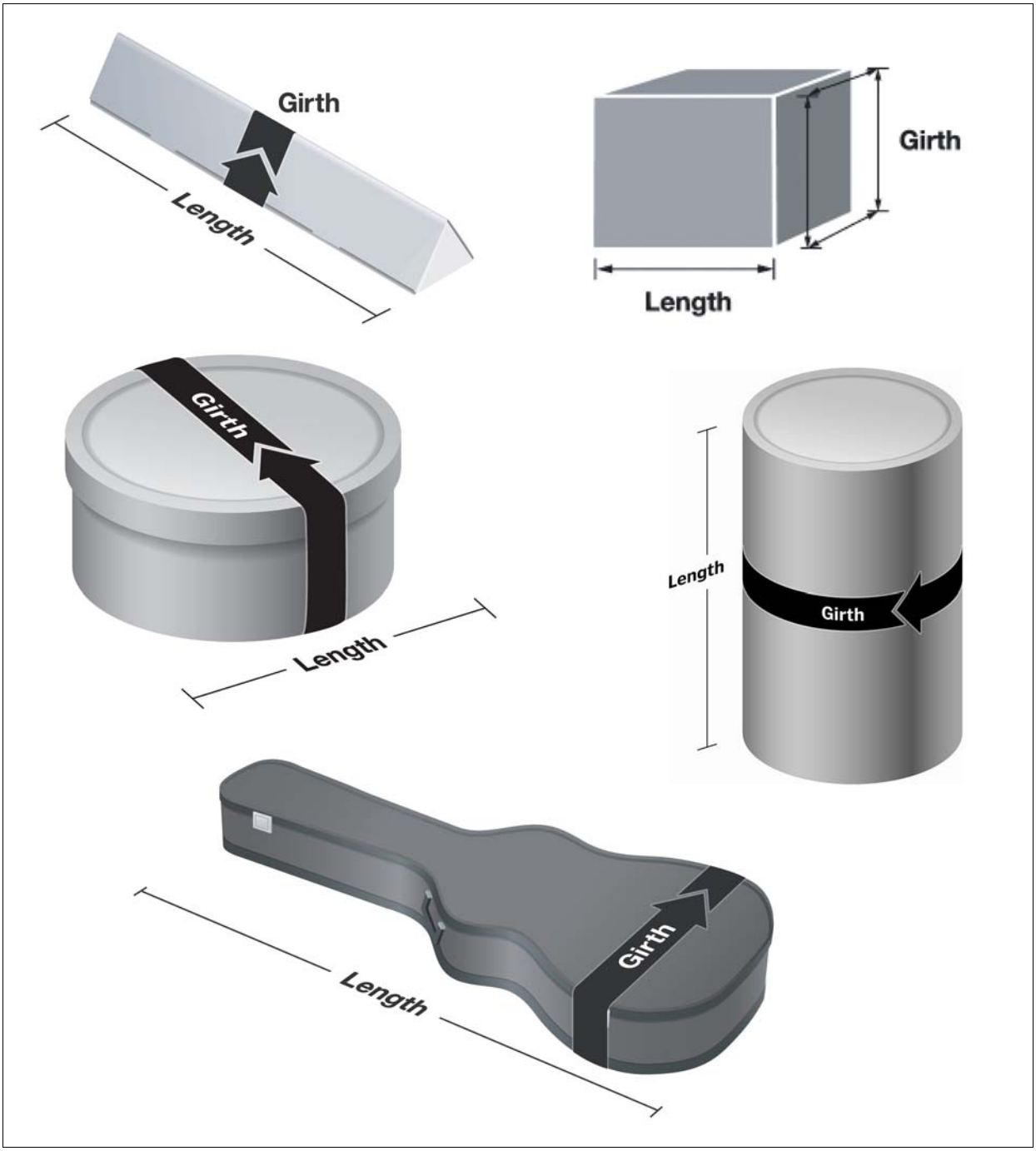

232 Eligibility

232.1 Priority Mail International Flat Rate Envelopes and Small Flat Rate Priced Boxes

All items that may be sent with First-Class Mail International service (see 241) may be sent in Priority Mail International Flat Rate Envelopes or Small Flat Rate Priced Boxes provided the contents are mailable, they fit securely in the envelope or box, and they are entirely confined within the container with the provided adhesive as the means of closure. The flap must close within the prefabricated fold. Tape may be applied to the flap and seams for closure or for reinforcement, provided the design of the container is not enlarged by opening the sides and taping or reconstructing the container in any way. Refer to the Individual Country Listings for additional prohibitions for each country. Insurance is not available. Registered Mail service may be available — see 330 and the Individual Country Listings for Registered Mail service availability, limitations, and coverage.

232.2 Eligible Priority Mail International Flat Rate Envelopes and Small Flat Rate Priced Boxes

Only the items in Exhibit 232.2a and Exhibit 232.2b qualify for the Priority Mail Flat Rate® Envelope or Small Flat Rate Box pricing.

Exhibit 232.2a
Eligible Priority Mail International Flat Rate Envelopes

Item	Size	Item No.
Priority Mail International Flat Rate Envelope	12-1/2" x 9-1/2"	Item EP 14-F
Priority Mail International Gift Card Flat Rate Envelope	10" x 7"	Item EP 14-GT
Priority Mail International Small Flat Rate Envelope	10" X 6"	Item EP 14-B
Priority Mail International Window Flat Rate Envelope	10" x 5"	Item EP 14-H
Priority Mail International Legal Flat Rate Envelope	15" x 9-1/2"	Item EP 14-L
Priority Mail International Padded Flat Rate Envelope	12-1/2" x 9-1/2"	Item EP 14-PE

Exhibit 232.2b
Eligible Priority Mail International Small Flat Rate Priced Boxes

Item	Inside Dimensions (L x W x H)	Outside Dimensions (L x W x H)	Item No.
Priority Mail International Small Flat Rate Box	8-5/8" x 5-3/8" x 1-5/8"	8-11/16" x 5-7/16" x 1-3/4"	SFBX
Priority Mail International DVD Box	7-9/16" x 5-7/16" x 1-1/8"	8-3/4" x 5-9/16" x 1-1/2"	O-DVDS
Priority Mail International Large Video Box	9-1/4" x 6-1/4" x 2"	9-9/16" x 6-7/16" x 2-3/16"	O-1096-L

232.3 Priority Mail International Medium and Large Flat Rate Boxes

All mailable items that qualify to be sent as Priority Mail International parcels may also be sent in the Priority Mail International Medium and Large Flat Rate Boxes. Written communication having the nature of current and personal correspondence may be included, provided it is exchanged between the sender and the addressee or other persons living with the addressee. Archived correspondence (e.g., personnel records) is also permitted and may be sent to any addressee. The contents must fit securely and must be entirely confined within the box. The box flaps must be able to close within the prefabricated folds. Tape may be applied to the flap and seams for closure or reinforcement, provided the design of the container is not enlarged by opening the sides and taping or reconstructing the container in any way. Refer to the Individual Country Listings for additional prohibitions for each country. Medium and Large Flat Rate Boxes may be insured — see 320 and the Individual Country Listings for insurance availability, limitations, and coverage. Registered Mail service is not available.

232.4 Eligible Priority Mail International Medium and Large Flat Rate Boxes

Only the items in Exhibit 232.4a and Exhibit 234.4b qualify for the Priority Mail International Medium and Large Flat Rate Box pricing.

Exhibit 232.4a
Eligible Priority Mail International Medium Flat Rate Boxes

Item	Inside Dimensions (L x W x H)	Outside Dimensions (L x W x H)	Item No.
Priority Mail International Medium Flat Rate Box	11" x 8-1/2" x 5-1/2"	11-1/4" x 8-3/4" x 6"	O-FRB1
Priority Mail International Medium Flat Rate Box	13-5/8" x 11-7/8" x 3-3/8"	14" x 12" x 3-1/2"	O-FRB2

Exhibit 232.4b
Eligible Priority Mail International Large Flat Rate Boxes

Item	Inside Dimensions (L x W x H)	Outside Dimensions (L x W x H)	Item No.
Priority Mail International Large Flat Rate Box	12" x 12" x 5-1/2"	12-1/4" x 12-1/4" x 6"	LFRB
Priority Mail International Board Game Large Flat Rate Box	23-11/16" x 11-3/4" x 3"	24-1/16" x 11-7/8" x 3-1/8"	GBFRB

232.5 Priority Mail International Parcels

Priority Mail International parcel service is designed for the carriage of outbound international postal parcels. Written communication having the nature of current and personal correspondence may be included, provided it is exchanged between the sender and the addressee or other persons living with the addressee. Archived correspondence (e.g, personnel records) is also permitted and may be sent to any addressee. Refer to the Individual Country Listings for additional prohibitions for each country. Priority Mail International parcels may be insured — see 320 and the Individual Country Listings for insurance availability, limitations, and coverage. Registered Mail service is not available.

232.6 Customs Forms Required

232.61 Priority Mail International Flat Rate Envelopes and Small Flat Rate Priced Boxes

A Priority Mail International Flat Rate Envelope might be required to bear PS Form 2976 depending on its physical characteristics and may not exceed $400 in value.

Each Priority Mail International Small Flat Rate Priced Box must bear a properly completed PS Form 2976 and may not exceed $400 in value.

See 123.61 for more information on customs forms usage with Priority Mail International Flat Rate Envelopes and Small Flat Rate Priced Boxes.

232.62 Priority Mail International Medium and Large Flat Rate Boxes

Each Priority Mail International Medium or Large Flat Rate Box must bear a properly completed PS Form 2976-A.

232.63 Priority Mail International Ordinary and Insured Parcels

Each Priority Mail International ordinary and insured parcel must bear a properly completed PS Form 2976-A.

232.7 Mail Sealed Against Inspection

Only Priority Mail International Flat Rate Envelopes and Small Flat Rate Priced Boxes are sealed against inspection. All other Priority Mail International items (USPS-produced Flat Rate Boxes, USPS-produced Tyvek envelopes, or customer-supplied boxes) are not sealed against inspection. Regardless of physical closure, the mailing of Priority Mail International items constitutes consent by the mailer to inspection of the contents.

232.8 Priority Mail International Insurance and Indemnity

232.81 Indemnity

Ordinary — i.e., uninsured — Priority Mail International parcels, except Small Flat Rate Priced Boxes, include indemnity coverage against loss, damage, or missing contents up to the amounts shown in Exhibit 232.83. Indemnity is limited to the lesser of the actual value of the contents or the maximum indemnity based on the weight of the article. If the parcel has been delivered to the addressee, payment for damage and missing contents is made to the addressee unless the addressee waives payment, in writing, in favor of the sender.

Note: International insured mail service provides insurance coverage greater than the indemnity limits for ordinary Priority Mail International parcels (including the Medium and Large Flat Rate Boxes) to many countries. See 320 and the Individual Country Listings for availability and limitations of coverage. When international insurance is purchased, it replaces the ordinary indemnity coverage.

232.82 Exclusions

Ordinary indemnity coverage is not paid for the following:

a. Parcels containing coins; banknotes; currency notes, including paper money; securities of any kind payable to the bearer; traveler's checks; platinum, gold, and silver; precious stones; jewelry; watches; and other valuable articles.

b. Consequential losses, delay, concealed damage, spoilage of perishable items, articles improperly packaged, articles too fragile to withstand normal handling in the mail, or prohibited articles.

232.83 Ordinary Priority Mail International Weight and Indemnity Limits

Exhibit 232.83 lists the weight and indemnity limits for ordinary Priority Mail International parcels.

Exhibit 232.83
Ordinary Priority Mail International Weight and Indemnity Limits

Weight not over (lbs.)	Indemnity	Weight not over (lbs.)	Indemnity	Weight not over (lbs.)	Indemnity
1	$66.32	25	$143.60	49	$220.88
2	69.54	26	146.82	50	224.10
3	72.76	27	150.04	51	227.32
4	75.98	28	153.26	52	230.54
5	79.20	29	156.48	53	233.76
6	82.42	30	159.70	54	236.98
7	85.64	31	162.92	55	240.20
8	88.86	32	166.14	56	243.42
9	92.08	33	169.36	57	246.64
10	95.30	34	172.58	58	249.86
11	98.52	35	175.80	59	253.08
12	101.74	36	179.02	60	256.30
13	104.96	37	182.24	61	259.52
14	108.18	38	185.46	62	262.74
15	111.40	39	188.68	63	265.96
16	114.62	40	191.90	64	269.18
17	117.84	41	195.12	65	272.40
18	121.06	42	198.34	66	275.62
19	124.28	43	201.56	67	278.84
20	127.50	44	204.78	68	282.06
21	130.72	45	208.00	69	285.28
22	133.94	46	211.22	70	288.50
23	137.16	47	214.44	—	—
24	140.38	48	217.66	—	—

232.9 Extra Services

232.91 Certificate of Mailing

Certificate of mailing service is available for purchase for only the following Priority Mail International items:

a. Priority Mail International Flat Rate Envelopes or Small Flat Rate Priced Boxes.

b. Ordinary (uninsured) Priority Mail International parcels including Medium and Large Flat Rate Boxes.

232.92 Merchandise Insurance

Insured mail service provides insurance coverage greater than the indemnity limits for ordinary Priority Mail International parcels (including the Medium and Large Flat Rate Boxes) to many countries. When international insurance is purchased, it replaces the ordinary indemnity coverage. See 320 and the Individual Country Listings for availability and limitations of coverage.
See Notice 123, *Price List,* for the fee schedule for optional Priority Mail International merchandise insurance coverage.

232.93 Registered Mail Service

Registered Mail service is available for purchase only for the following Priority Mail International items:

a. Flat Rate Envelopes listed in 232.2, including free matter for the blind items.

b. Small Flat Rate Priced Boxes listed in 232.2, including free matter for the blind items.

232.94 Return Receipt Service

Return receipt service is available for purchase to certain destinations (see the Individual Country Listings for availability) for the following items:

a. Priority Mail International parcels when purchased with insurance.

b. Priority Mail International Flat Rate Envelopes when purchased with Registered Mail service.

c. Priority Mail International Small Flat Rate Priced Boxes when purchased with Registered Mail service.

See 340 for preparation procedures.

232.95 Restricted Delivery

Restricted delivery service is available for purchase for only the following Priority Mail International items:

a. Flat Rate Envelopes that use both Registered Mail service and a return receipt.

b. Small Flat Rate Priced Boxes that use both Registered Mail service and a return receipt.

In addition, restricted delivery service for the applicable Priority Mail International items noted above is available only to certain destinations — see the Individual Country Listings for availability.

233 Prices and Postage Payment Methods

233.1 Prices

233.11 Availability and Price Application — General

Except under 233.14 and 233.15, Priority Mail International shipments are charged postage for each addressed piece according to its weight and zone. See the Individual Country Listings for countries that offer Priority Mail International service.

233.12 Commercial Base Prices

Priority Mail International commercial base prices are generally less than Priority Mail International retail prices when postage is paid using a permit imprint under 233.222 or the online methods described in 233.231.
See Notice 123, *Price List*, for the applicable price.

233.13 Commercial Plus Prices

For approved mailers, Priority Mail International commercial plus prices are generally less than Priority Mail International commercial base prices when postage is paid by a registered end-user of a USPS-approved PC Postage

product, or a permit imprint under 233.222. See Notice 123, *Price List*, for the applicable price.

233.131 **Commercial Plus Pricing — Eligibility**

To qualify for commercial plus pricing, customers must agree to all terms and conditions in a standardized agreement with the Postal Service and tender at least $100,000 per year of international expedited products. For this purpose, "international expedited products" includes any combination of Global Express Guaranteed, Express Mail International, or Priority Mail International items.

233.132 **Commercial Plus Pricing — Approval**

Mailers meeting the minimum revenue thresholds under 233.131 must complete an agreement with the Postal Service by contacting their account manager, or USPS Global Business via e-mail at *globalcpp@usps.gov,* for a commitment agreement form or for additional information.

233.14 Priority Mail International Flat Rate Envelopes and Small Flat Rate Priced Boxes

Priority Mail International Flat Rate Envelopes and Small Flat Rate Priced Boxes are charged at a flat rate. The price does not depend on the weight of the item, but the weight cannot exceed the 4-pound weight limit. Postage is required for each piece (see Notice 123, *Price List*). A domestic Priority Mail Flat Rate Envelope with prepaid postage may also be used for a Priority Mail International item provided that appropriate additional postage is added before mailing.

233.15 Priority Mail International Medium and Large Flat Rate Boxes

The Priority Mail International Medium and Large Flat Rate Boxes are charged at a flat rate. The price does not depend on the weight of the item, but the weight cannot exceed the 20-pound weight limit. Postage is required for each piece (see Notice 123, *Price List)*.

233.16 Priority Mail International Parcels

Prices for parcels not using Flat Rate packaging vary by weight and country price group. See the Individual Country Listings.

233.2 Postage Payment Methods

233.21 General

Priority Mail International items may be paid with postage stamps, postage validation imprinter (PVI) labels, postage meter stamps, information-based indicia (IBI), PC Postage service, or permit imprint.

233.22 Permit Imprint

233.221 **Permit Imprint — General**

Payment for Priority Mail International shipments paid with a permit imprint through an advance deposit account is permitted only when requirements for commercial base prices or commercial plus prices (see 233.222) are followed. Postage paid with a permit imprint is subject to the general conditions in IMM 152.4 and in DMM 604 and 705.

233.222 Permit Imprint — Commercial Base or Commercial Plus Prices

Priority Mail International commercial base and commercial plus prices are generally less than Priority Mail International retail prices when postage is paid using a permit imprint. See Notice 123, *Price List*, for the applicable price. The commercial base price applies only to the postage portion of Priority Mail International prices. In addition, customers must meet the following requirements:

a. Use USPS-produced Global Shipping Software (GSS). (To request information about GSS, send an e-mail to *GSSHelp@usps.gov*.)

b. Pay for postage with a permit imprint through an advance deposit account.

c. Meet manifesting and permit imprint requirements under IMM 152.4 and DMM 604 and the manifesting requirements under DMM 705.

Note: When using GSS, no extra services such as insurance are available.

233.23 Online Postage Payment Method

233.231 Online Prices

For selected destination countries, Priority Mail International items qualify for discounted prices (equal to the commercial base price or commercial plus price) when mailers use one of the following online shipping methods:

a. Commercial Base Price: Click-N-Ship service; or registered end-users of an authorized PC Postage vendor.

b. Commercial Plus Price: Registered end-users of an authorized PC Postage vendor.

The commercial base or commercial plus price is automatically applied to each shipment when using one of the above postage payment methods. The discount applies only to the postage portion of the Priority Mail International price. It does not apply to any other charges or fees, such as fees for Pickup on Demand service, insurance, or shipments made under a customized agreement.

233.232 Marking Requirements

Priority Mail International mailpieces claiming the commercial base or commercial plus price paid with PC Postage must bear the appropriate price marking, printed on the piece or produced as part of the PC Postage indicia. Mailers must place the applicable marking directly above, directly below, or to the left of the postage using one of the following formats:

a. Commercial Base Price, Commercial Base Pricing, or ComBasPrice.

b. Commercial Plus Price, Commercial Plus Pricing, or ComPlsPrice.

233.233 Determining Online Prices

For each addressed mailpiece, refer to Notice 123, *Price List*, for the applicable commercial base or commercial plus price.

233.3 Official Mail

233.31 Mailings by Federal Agencies

Priority Mail International shipments that are entered by federal agencies and departments are subject to the same standards under 230 as Priority Mail International shipments that are entered by nongovernmental entities.

233.32 Postal Service Mailings

Priority Mail International shipments that are entered by U.S. Postal Service entities are subject to the same standards under 230 as Priority Mail International shipments that are entered by nongovernmental entities, except that U.S. Postal Service mailings must bear the G-10 permit indicia that are prescribed for all Postal Service official mail. See 142.2.

234 Mail Preparation

234.1 Addressing

Priority Mail International packages are subject to the addressing requirements contained in 122. In addition, mailers should include the name and address of the sender and addressee on a separate slip enclosed in the parcel. See 122.

234.2 Marking

Priority Mail International items must be marked “AIRMAIL” or “PAR AVION” or bear one of the two prescribed airmail labels (i.e., either PS Label 19-A, *Par Avion Airmail*, or PS Label 19-B, *Par Avion Airmail*). The airmail marking or label should be placed below and to the left of the delivery address.

234.3 Customs Documentation

Mailers must complete the applicable customs form, and, if applicable, fulfill any other nonpostal export requirements described in chapter 5.

234.4 Sealing

Mailers must seal their items with clinched staples, banding, adhesives, sewing, tape, or other materials used to seal parcels. See DMM 601. The seal must be sufficient to allow detection of tampering.

234.5 Packaging

234.51 Packaging Requirements — General

Every parcel must be securely and substantially packed. In packing, the sender must consider the nature of the contents, the climate, the length of the journey, and the numerous handlings involved in the conveyance of international mail. Heavy wrapping paper or waterproof paper is permitted only as the outside covering of a carton. Heavy objects, such as cans of food, must be surrounded with other contents or packing material in order to prevent their shifting within the parcel. For recommended packing procedures, see DMM 601.

234.52 Types of Containers

Ordinary paperboard containers are not acceptable. Parcels must be packed in one of the following:

a. Canvas or similar material.

b. Double-faced corrugated or solid (minimum 275-pound test) fiber boxes or cases.

c. Strong wooden boxes made of lumber at least 1/2-inch thick or plywood of at least three plies.

234.53 Closure Options for Wooden Boxes or Bags

If otherwise acceptable, boxes may be secured with screwed or nailed lids, and bags may be closed by sewing.

235 Mail Entry and Deposit

235.1 Place of Mailing

235.11 Items Requiring a Completed Customs Declaration

Except as provided in 235.12, a mailer may not deposit a Priority Mail International item that requires a completed customs form into a collection box, Postal Service lobby drop, Automated Postal Center (APC) drop, or customer mailbox, or at a Postal Service dock or other unattended location. In addition, these mailpieces are precluded from Pickup on Demand service under 235.2 and Carrier Pickup service under 235.3. Customers must present such items to an employee at a Post Office retail service counter. Customers who enter volume mailings paid with a permit imprint under 233.22 must enter such items through a business mail entry unit (BMEU) or, when authorized by the district BMEU manager, through an authorized detached mail unit (DMU) at a mailer's plant. The Postal Service will return improperly presented items to the sender for proper entry and acceptance.

235.12 Items Bearing a Completed Customs Declaration With an Electronic Round Date

Priority Mail International items that have the mailing label, customs form (including an electronic round stamp), and postage prepared and paid online through Click-N-Ship service on usps.com, the eBay integrated shipping solution, or an authorized PC Postage vendor Web site may be deposited by one of the following methods:

a. At a Postal Service retail counter.

b. Through Pickup on Demand service (see 235.2).

c. Through Carrier Pickup service (see 235.3).

d. Into a Postal Service lobby drop.

e. Into an Automated Postal Center (APC) drop.

f. In a collection box.

g. In a customer mailbox.

235.13 Priority Mail International Flat Rate Envelopes Not Requiring a Customs Declaration

235.131 General

A Priority Mail International Flat Rate Envelope meeting the conditions in 123.6 is the only Priority Mail International item that can be mailed without a customs label. See 235.132 through 235.134 for specific conditions.

235.132 Priority Mail International Flat Rate Envelopes Weighing 13 Ounces or Less and Paid With Postage Stamps

A Priority Mail International Flat Rate Envelope (see 232.61) weighing 13 ounces or less, bearing only postage stamps, and not requiring a customs declaration (see 123.6) may be deposited by one of the following methods:

a. At a Postal Service retail counter.

b. Through Pickup on Demand service (see 235.2).

c. Through Carrier Pickup service (see 235.3).

d. Into a Postal Service lobby drop.

e. Into an Automated Postal Center (APC) drop.

f. In a collection box.

g. In a customer mailbox.

235.133 Priority Mail International Flat Rate Envelopes Weighing More Than 13 Ounces and Paid With Postage Stamps

A customer may not deposit a Priority Mail International Flat Rate Envelope (see 232.61) weighing more than 13 ounces, bearing only postage stamps, and not requiring a customs declaration (see 123.6) into a collection box, Postal Service lobby drop, Automated Postal Center (APC) drop, or customer mailbox, or at a Postal Service dock or other unattended location. In addition, these mailpieces are precluded from Pickup on Demand service under 235.2 and Carrier Pickup service under 235.3. Customers must present such items to an employee at a Post Office retail service counter. The Postal Service will return improperly presented items to the sender for proper entry and acceptance.

235.134 Priority Mail International Flat Rate Envelopes Using Payment Methods Other Than Postage Stamps

A Priority Mail International Flat Rate Envelope (see 232.61) paid with online postage, postage meters, or information-based indicia (IBI) weighing less than 16 ounces and not requiring a customs declaration (see 123.6) may be deposited by one of the following methods:

a. At a Postal Service retail counter.

b. Through Pickup on Demand service (see 235.2).

c. Through Carrier Pickup service (see 235.3).

d. Into a Postal Service lobby drop.

e. Into an Automated Postal Center (APC) drop.

f. In a collection box.

g. In a customer mailbox.

235.2 Pickup On Demand Service

Subject to the standards in 235.1, Pickup On Demand service is available for Priority Mail International items. There is a single charge for Pickup On Demand service (see Notice 123, *Price List*), regardless of the number of items scheduled for pickup. A pickup can include any or all of the following items:

a. Global Express Guaranteed items.

b. Express Mail International items.

c. Priority Mail International items.

d. Express Mail items.

e. Priority Mail items.

f. Package Services items.

235.3 Carrier Pickup Service

No pickup fee will be charged when a Priority Mail International item or items are picked up during a letter carrier's regular delivery stop or during a scheduled stop made to collect other mail not subject to a pickup fee. Pickup service is provided in accordance with the information in DMM 507.6; for more information, also visit the online site at *usps.com/pickup*.

240 First-Class Mail International

241 Description and Physical Characteristics

241.1 General

The First-Class Mail International classification encompasses all categories of international mail that before May 14, 2007, were categorized as airmail letter-post and economy letter-post, postcards, printed matter, and small packets that were formerly categorized as LC (letters and cards) and AO (other articles).

241.2 Physical Characteristics

241.21 Physical Standards — Letters

241.211 Weight Limit

The weight limit for a letter-size First-Class Mail International mailpiece is 3.5 ounces. Letter-size items exceeding 3.5 ounces are charged the First-Class Mail International flat-size price.

241.212 Dimensions

Letter-size mail must be rectangular and must meet the following dimensions:

a. Not less than 5-1/2 inches long or 3-1/2 inches high or 0.007-inch thick.

b. Not more than 11-1/2 inches long or 6-1/8 inches high or 1/4-inch thick.

Note: For the purpose of determining mailability or machinability of a letter-sized piece, the length is the dimension parallel to the delivery address as read, and the height is the dimension perpendicular to the length.

241.213 **Color**

Light-colored envelopes that do not interfere with the reading of the address and postmark must be used. Brilliant colored envelopes are not authorized.

241.214 **Quality**

Envelopes and packaging materials must be constructed to be strong enough to withstand normal handling. Highly glazed paper or paper with a design that affects readability or processing is not acceptable.

241.215 **Bordered Envelopes and Cards**

Envelopes and cards that have green bars or red- and blue-striped borders may be used for the sending of First-Class Mail International items.

241.216 **Window Envelopes**

Address windows for letter-size envelopes must be used under the following conditions:

a. The address window must be parallel with the length of the envelope and must be in the lower portion of the address side.

b. Nothing but the name, address, and any key number used by the mailer may appear through the address window.

c. The return address should appear in the upper-left corner. If there is no return address and the delivery address does not show through the window, the piece is handled as undeliverable mail.

d. The address disclosed through the window must be on white paper or paper of a very light color.

e. When used for Registered Mail, window envelopes must conform to the conditions in DMM 503.

f. All window envelopes for international mail must include a transparent material covering the window opening — i.e., open-panel envelopes are not acceptable.

241.217 **Nonmachinable Surcharge**

Regardless of a letter's weight, a per-piece surcharge (see Notice 123, *Price List*) applies to a First-Class Mail International letter that is nonmachinable for any of the following reasons:

a. Has an aspect ratio (length divided by height) of less than 1.3 or more than 2.5.

b. Is polybagged, polywrapped, or enclosed in any plastic material.

c. Has clasps, strings, buttons, or similar closure devices.

d. Contains items such as pens, pencils, or loose keys or coins that cause the thickness of the mailpiece to be uneven.

e. Is too rigid (does not bend easily when subjected to a transport belt tension of 40 pounds around an 11-inch diameter turn).

f. Is more than 4-1/4 inches high or 6 inches long and less than 0.009 inch thick.

g. Has a delivery address parallel to the shorter dimension of the mailpiece.

241.22 Physical Standards — Cards

241.221 Postcard Dimensions

Each postcard claimed at a card price must be rectangular and must meet the following dimensions:

a. Not less than 3-1/2 inches high or 5-1/2 inches long or 0.007 inch thick.

b. Not more than 4-1/4 inches high or 6 inches long or 0.016 inch thick.

Note: Unenclosed cards exceeding the size limits for postcards are mailable at the First-Class Mail International letter price if they do not exceed 4-3/4 inches high or 9-1/4 inches long.

241.222 Color

Light-colored cards that do not interfere with the reading of the address and postmark must be used. Brilliant colored cards are not authorized.

241.223 Quality

Cards must be constructed to be strong enough to withstand normal handling. Highly glazed card stock or card stock with a design that affects readability or processing is not acceptable.

241.224 Additional Standards

To claim the card price, postcards must meet the following conditions:

a. Postcards must consist of single cards sent without a wrapper or envelope.

b. Privately manufactured postcards, except picture postcards, must bear the heading “Postcard.”

241.225 Right Half of Postcard

The right half of the address side of a card must be reserved for the address of the addressee and postal notations or labels.

241.226 Left Half and Reverse Side of Postcard

The left half of the address side of the card and the reverse side can be used for a message or permissible attachments. If a return address is used, it must appear in the upper-left half of the address side.

241.227 Acceptable Attachments

The following attachments may be applied to a postcard as noted, provided the attachment is made of paper or other thin material and adheres completely to the card:

a. To the left half or the back side of the card: clippings of any kind, illustrations or photographs, or labels other than address labels.

b. Only to the back side of the card: stamps likely to be confused with postage stamps.

c. Only to the address side of the card for addressing purposes: address labels.

241.228 **Unacceptable Attachments**

The following attachments to a card are not acceptable:

a. An attachment that is not made of paper.

b. An attachment that does not totally adhere to the card surface.

c. An attachment that is an encumbrance to postal processing.

241.229 **Folded (Double) Cards**

Folded (double) cards must be mailed in envelopes at the First-Class Mail International letter price.

241.23 Physical Standards — Large Envelopes (Flats)

241.231 **Weight Limit**

The weight limit for a First-Class Mail International large envelope (flat) is 4 pounds.

241.232 **Dimensions and Characteristics**

Large envelopes (flats) must meet the following dimensions and characteristics:

a. More than 11-1/2 inches long or 6-1/8 inches high or 1/4-inch thick.

b. Not more than 15 inches long or 12 inches high or 3/4-inch thick.

c. Flexible (see 241.236).

d. Rectangular.

e. Uniformly thick as stated in 241.235.

Note: The length of a large envelope (flat) is the longest dimension. The height is the dimension perpendicular to the length. A First-Class Mail International large envelope (flat) that does not meet the standards in 241.23 correct is not eligible for the large envelope (flat) size price and is charged the applicable package (small packet) price.

241.233 **Color**

Light-colored envelopes that do not interfere with the reading of the address and postmark must be used. Brilliant colored envelopes are not authorized.

241.234 **Quality**

Flats must be constructed to be strong enough to withstand normal handling. Highly glazed paper or paper with a design that affects readability or processing is not acceptable.

241.235 **Uniform Thickness**

Large envelopes (flats) must be uniformly thick so that any bumps, protrusions, or other irregularities do not cause more than a 1/4-inch variance in thickness. When determining variance in thickness, exclude the outside edges of a mailpiece (1 inch from each edge) when the contents do not extend into those edges. Also, exclude the selvage of any polywrap covering from this determination. Mailers must secure nonpaper contents to prevent shifting of more than 2 inches within the mailpiece if shifting would cause the piece to be nonuniform in thickness or would result in the contents bursting out of the mailpiece.

241.236 **Minimum Flexibility**

Large envelopes (flats) must be flexible. Boxes with or without hinges, gaps, or breaks that allow the piece to bend are not considered large envelopes (flats). Tight envelopes or wrappers that are filled with one or more boxes are not considered large envelopes (flats). Customers have the option to perform the tests described below and illustrated in Exhibit 241.236a–Exhibit 241.236c on their own mailpieces. When a Postal Service employee observes a customer demonstrating that a flat-size piece is flexible according to these standards, the employee does not need to perform the test. Test flats as follows:

a. All large envelopes (flats) (see Exhibit 241.236a):

(1) Place the piece with the length parallel to the edge of a flat surface and extend the piece halfway off the surface.

(2) Press down on the piece at a point 1 inch from the outer edge, in the center of the piece's length, exerting steady pressure.

(3) The piece is not flexible if it cannot bend at least 1 inch vertically without being damaged.

(4) The piece is flexible if it can bend at least 1 inch vertically without being damaged and does not contain a rigid insert. No further testing is necessary.

(5) If the piece can bend at least 1 inch vertically without being damaged but contains a rigid insert, test the piece according to 241.236b or 241.236c.

Exhibit 241.236a
Flexibility Test — All Large Envelopes (Flats)

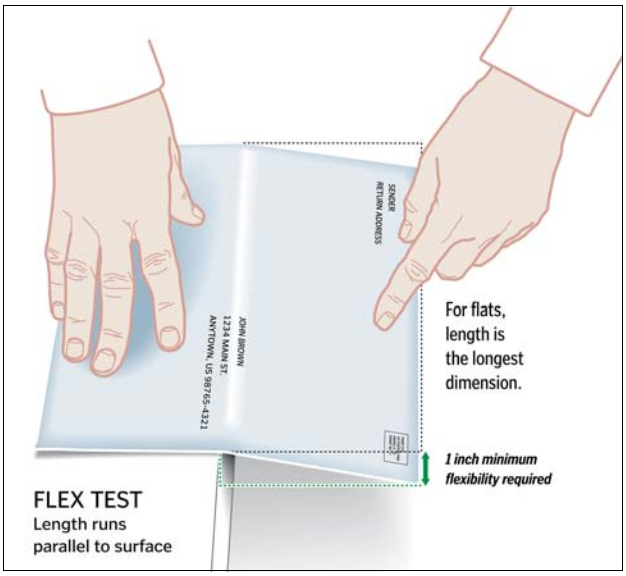

b. Large envelopes 10 inches or longer that demonstrate the required flexibility in 241.236a but that contain a rigid insert (see Exhibit 241.236b):

(1) Place the piece with the length perpendicular to the edge of a flat surface and extend the piece 5 inches off the surface.

(2) Press down on the piece at a point 1 inch from the outer edge, in the center of the piece's width, exerting steady pressure.

(3) Turn the piece around and repeat steps 1 and 2. The piece is flexible if both ends can bend at least 2 inches vertically without being damaged.

Exhibit 241.236b
Flexibility Test — Large Envelopes (Flats) 10 Inches or Longer

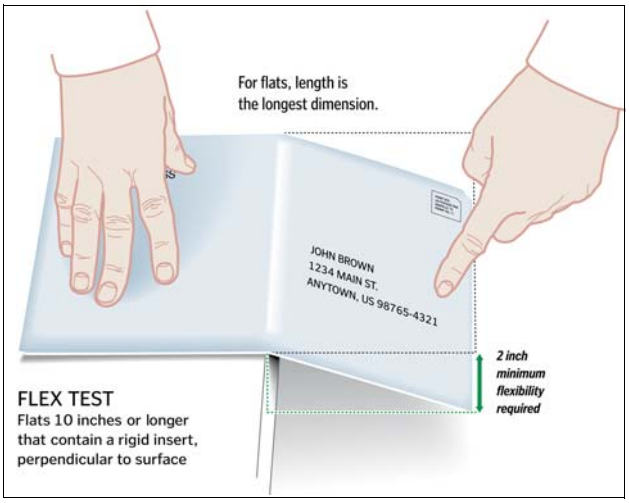

c. Large envelopes less than 10 inches long that demonstrate the required flexibility in 241.236a but that contain a rigid insert (see Exhibit 241.236c):

(1) Place the piece with the length perpendicular to the edge of a flat surface and extend the piece halfway off the surface.

(2) Press down on the piece at a point 1 inch from the outer edge, in the center of the piece's width, exerting steady pressure.

(3) Turn the piece around and repeat steps 1 and 2. The piece is flexible if both ends can bend at least 1 inch vertically without being damaged.

Exhibit 241.236c
Flexibility Test — Large Envelopes (Flats) Less Than 10 Inches Long

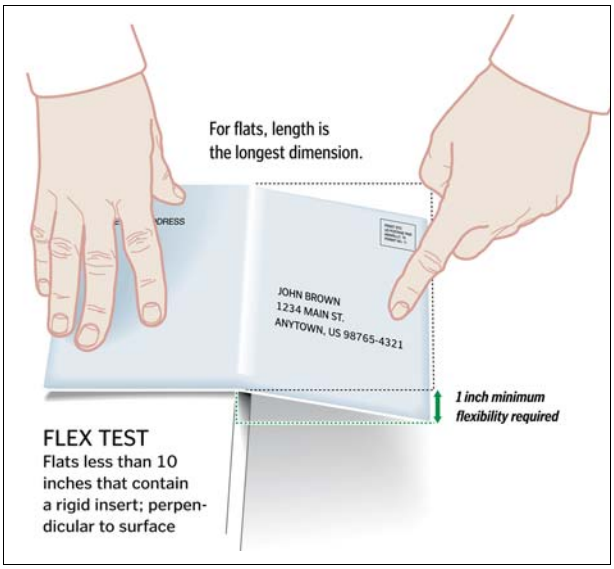

241.24 Physical Standards — Packages (Small Packets)

241.241 Weight Limit

The weight limit for a First-Class Mail International package (small packet) is 4 pounds.

241.242 Dimensions — Other Than Rolls

Packages (small packets) other than rolls must be within the following dimensions:

a. Maximum length: 24 inches. Length is the longest dimension.

b. Maximum length, height, and depth (thickness) combined: 36 inches.

c. Minimum size: Large enough to accommodate the postage, address, customs form, and other required elements on the address side.

241.243 Dimensions — Rolls

Rolls must be within the following dimensions:

a. Minimum length: 4 inches.

b. Minimum length plus twice the diameter combined: 6-3/4 inches.

c. Maximum length: 36 inches.

d. Maximum length plus twice the diameter combined: 42 inches.

241.244 Quality

Packages (small packets) must be constructed to be strong enough to withstand normal handling.

242 Eligibility

242.1 Content Eligibility

Subject to applicable weight and size limits, any article that is otherwise acceptable and not prohibited by the Postal Service or the country of destination may be mailed at the First-Class Mail International price.

242.2 Customs Forms Required

242.21 Dutiable Merchandise

The following conditions apply to dutiable merchandise mailed with First-Class Mail International service:

a. Any merchandise sent to another country may be subject to duty under the customs regulations of that country. The Postal Service does not maintain or provide information concerning the assessment of customs duty.

b. First-Class Mail International items may contain dutiable merchandise unless the country of destination prohibits dutiable merchandise in letters. (See the Individual Country Listings.)

c. When mailing an article that may be dutiable, the sender must use PS Form 2976 (see 123) and must also follow the special instructions under "Customs Forms Required" and "Observations" in the Individual Country Listings.

d. The maximum value for dutiable merchandise is $400. Items exceeding $400 must be mailed using Global Express Guaranteed service, Express Mail International service, or Priority Mail International service (but not with the Priority Mail International Flat Rate Envelopes or Small Flat Rate Priced Boxes).

242.22 Nondutiable Merchandise

Nondutiable merchandise may be mailed (at the sender's risk) to countries that do not accept dutiable merchandise. The Postal Service assumes no responsibility for the treatment such items may receive in the country of destination.

Note: Because PS Form 2976 generally denotes dutiable contents, it should be omitted from First-Class Mail International letter-size and flat-size mailpieces weighing less than 16 ounces when the contents are not dutiable (see 123.61).

242.3 Mail Sealed Against Inspection

First-Class Mail International mailpieces are sealed against inspection.

242.4 Extra Services

242.41 Certificate of Mailing

Certificate of mailing service is available for purchase for First-Class Mail International items.

242.42 Registered Mail Service

Registered Mail service is available for purchase for First-Class Mail International items, including for such items mailed as free matter for the blind or physically handicapped.

242.43 Return Receipt Service

For First-Class Mail International items, return receipt service is available for purchase only for items that use Registered Mail service to certain destinations — see the Individual Country Listings for availability and 340 for preparation procedures.

242.44 Restricted Delivery

Restricted delivery service is available for purchase for only First-Class Mail International items that use both Registered Mail service and a return receipt, and only to certain destinations — see the Individual Country Listings for availability.

243 Prices and Postage Payment Methods

243.1 Prices

243.11 Prices and Price Application — General

First-Class Mail International cards, letters, large envelopes (flats), and packages (small packets) are charged postage for each addressed piece according to its weight and zone. For prices, see the Individual Country Listings.

243.12 Price Computation

Other than postcards, First-Class Mail International prices are charged per ounce or fraction thereof; any fraction of an ounce is rounded up to the next whole ounce. For example, if a piece weighs 1.2 ounces, the weight (postage) increment is 2 ounces. The minimum postage per addressed piece, except for postcards, is that for a piece weighing 1 ounce.

243.13 Destinating Countries and Price Groups

See the Individual Country Listings for First-Class Mail International postage prices that are applicable to specific destination countries. Exhibit 243.13 shows the country-specific price group designations that apply to First-Class Mail International service.

Exhibit 243.13
First-Class Mail International Price Groups

Country Name	Price Group
Afghanistan	6
Albania	4
Algeria	8
Andorra	5
Angola	7
Anguilla	9
Antigua and Barbuda	9
Argentina	9
Armenia	4
Aruba	9
Ascension	7
Australia	3
Austria	5
Azerbaijan	4
Bahamas	9
Bahrain	8
Bangladesh	6
Barbados	9
Belarus	4
Belgium	5

Exhibit 243.13
First-Class Mail International Price Groups

Country Name	Price Group
Belize	9
Benin	7
Bermuda	9
Bhutan	6
Bolivia	9
Bosnia-Herzegovina	4
Botswana	7
Brazil	9
British Virgin Islands	9
Brunei Darussalam	6
Bulgaria	4
Burkina Faso	7
Burma	6
Burundi	7
Cambodia	6
Cameroon	7
Canada	1
Cape Verde	7
Cayman Islands	9
Central African Republic	7
Chad	7
Chile	9
China	3
Colombia	9
Comoros	7
Congo, Democratic Republic of the	7
Congo, Republic of the	7
Costa Rica	9
Cote d'Ivoire (Ivory Coast)	7
Croatia	4
Cuba	9
Cyprus	4
Czech Republic	4
Denmark	5
Djibouti	7
Dominica	9
Dominican Republic	9
Ecuador	9
Egypt	8
El Salvador	9
Equatorial Guinea	7
Eritrea	7
Estonia	4
Ethiopia	8
Falkland Islands	9
Faroe Islands	5
Fiji	6
Finland	5
France	5
French Guiana	9
French Polynesia	6

Exhibit 243.13
First-Class Mail International Price Groups

Country Name	Price Group
Gabon	7
Gambia	7
Georgia, Republic of	4
Germany	5
Ghana	7
Gibraltar	5
Great Britain and Northern Ireland	5
Greece	5
Greenland	5
Grenada	9
Guadeloupe	9
Guatemala	9
Guinea	7
Guinea-Bissau	7
Guyana	9
Haiti	9
Honduras	9
Hong Kong	3
Hungary	4
Iceland	5
India	6
Indonesia	6
Iran	8
Iraq	8
Ireland	5
Israel	5
Italy	5
Jamaica	9
Japan	3
Jordan	8
Kazakhstan	6
Kenya	7
Kiribati	6
Korea, Democratic People's Republic of (North Korea)	6
Korea, Republic of (South Korea)	3
Kosovo, Republic of	5
Kuwait	8
Kyrgyzstan	6
Laos	6
Latvia	4
Lebanon	8
Lesotho	7
Liberia	7
Libya	8
Liechtenstein	5
Lithuania	4
Luxembourg	5
Macao	6
Macedonia, Republic of	4
Madagascar	7

Exhibit 243.13
First-Class Mail International Price Groups

Country Name	Price Group
Malawi	7
Malaysia	6
Maldives	6
Mali	7
Malta	5
Martinique	9
Mauritania	7
Mauritius	7
Mexico	2
Moldova	4
Mongolia	6
Montenegro	5
Montserrat	9
Morocco	8
Mozambique	7
Namibia	7
Nauru	6
Nepal	6
Netherlands	5
Netherlands Antilles	9
New Caledonia	6
New Zealand	6
Nicaragua	9
Niger	7
Nigeria	7
Norway	5
Oman	8
Pakistan	6
Panama	9
Papua New Guinea	6
Paraguay	9
Peru	9
Philippines	6
Pitcairn Island	6
Poland	4
Portugal	5
Qatar	8
Reunion	9
Romania	4
Russia	4
Rwanda	7
Saint Christopher and Nevis	9
Saint Helena	7
Saint Lucia	9
Saint Pierre and Miquelon	4
Saint Vincent and the Grenadines	9
San Marino	5
Sao Tome and Principe	7
Saudi Arabia	8
Senegal	7
Serbia, Republic of	5

Exhibit 243.13
First-Class Mail International Price Groups

Country Name	Price Group
Seychelles	7
Sierra Leone	7
Singapore	6
Slovak Republic	5
Slovenia	5
Solomon Islands	6
Somalia	No Service
South Africa	7
Spain	5
Sri Lanka	6
Sudan	7
Suriname	9
Swaziland	7
Sweden	5
Switzerland	5
Syrian Arab Republic	8
Taiwan	6
Tajikistan	6
Tanzania	7
Thailand	6
Togo	7
Tonga	6
Trinidad and Tobago	9
Tristan da Cunha	7
Tunisia	8
Turkey	4
Turkmenistan	6
Turks and Caicos Islands	9
Tuvalu	6
Uganda	7
Ukraine	4
United Arab Emirates	8
Uruguay	9
Uzbekistan	6
Vanuatu	6
Vatican City	5
Venezuela	9
Vietnam	6
Wallis and Futuna Islands	6
Western Samoa	6
Yemen	8
Zambia	7
Zimbabwe	7

243.2 Postage Payment Methods — General

First-Class Mail International items may be paid with postage stamps, postage validation imprinter (PVI) labels, postage meter stamps, information-based indicia (IBI), PC Postage service, or permit imprint.

243.3 Permit Imprint — General

Mailers may use a permit imprint for mailings that contain identical weight pieces. Any of the First-Class Mail International permit imprint formats shown in Exhibit 152.44 is acceptable. Postage is calculated as described in 243.12 and is deducted from the mailer's advance deposit account. Permit imprints must not denote bulk mail, nonprofit, or other domestic or special mail markings. Mailers may use permit imprint with nonidentical weight pieces only if authorized to use postage mailing systems under DMM 705.

243.4 Official Mail

243.41 Mailings by Federal Agencies

First-Class International shipments that are entered by federal agencies and departments are subject to the same standards under 240 as First-Class Mail International shipments that are entered by nongovernmental entities.

243.42 Postal Service Mailings

First-Class Mail International shipments that are entered by U.S. Postal Service entities are subject to the same standards under 240 as First-Class Mail International shipments that are entered by nongovernmental entities, except that U.S. Postal Service mailings must bear the G-10 permit indicia that are prescribed for all Postal Service official mail. See 142.2.

244 Mail Preparation

244.1 Addressing

First-Class Mail International items are subject to the addressing requirements in 122.

244.2 Marking

The following markings apply to First-Class Mail International items:

a. First-Class Mail International postcards, letters, and large envelopes (flats) must be marked "AIRMAIL/PAR AVION" or have PS Label 19-A, *Par Avion Airmail*, or PS Label 19-B, *Par Avion Airmail*, affixed to the address side of the mailpiece.

b. First-Class Mail International packages (small packets) and rolls — which because of their size, shape, or configuration might be mistaken for another category of international mail — should be marked "LETTER-POST" on the address side of the mailpiece.

c. First-Class Mail International items that qualify as free matter for the blind or physically handicapped must bear the marking "FREE MATTER FOR THE BLIND" in the upper-right corner of the address side of the mailpiece. See 274.2.

244.3 Sealing

Unregistered First-Class Mail International items may be sealed at the sender's option. Mailpieces not sealed by conventional means, such as moistening the gummed flaps on envelopes or taping the open flaps for small packets, must be closed in such a manner as to prevent the contents from falling out or being damaged during postal handling and transport.

First-Class Mail International items that use Registered Mail service must be sealed. (See 334.4 for sealing requirements for Registered Mail service.)

244.4 Packaging

The following packaging methods may be used for First-Class Mail International items:

a. Mailers must package mailpieces to withstand normal transit and handling without content or package breakage, injury to Postal Service employees, or damage to other mail or Postal Service equipment.

b. Mailers must package their contents to prevent their deterioration.

c. Mail matter is admissible in envelopes, sleeves, or wrappers of varying sizes and thickness

Note: Transparent plastic packaging is acceptable for international mailing purposes.

d. Bulkier items are admissible in boxes, cartons, tubes, or other types of containers that are commonly used to transmit shipments that are in package form.

e. Except as provided in 292.4 and 293.4, folded mailpieces, without envelopes, are admissible provided that all of the open sides are secured with tape, tabs, or wafer seals of sufficient quantity and strength to prevent the mailpieces from opening or being damaged during postal handling.

f. First-Class Mail International items in card form are permitted, so long as their overall dimensions do not exceed 4-3/4 inches high or 9-1/4 inches long (see 241.221).

245 Mail Entry and Deposit — Place of Mailing

245.1 Items Requiring a Completed Customs Declaration

Except as provided in 245.2, a mailer may not deposit a First-Class Mail International item that requires a completed customs declaration form into a collection box, Postal Service lobby drop, Automated Postal Center (APC) drop, or customer mailbox, or at a Postal Service dock or other unattended location. Customers must present such items to an employee at a Post Office retail service counter. Customers who enter volume mailings paid with a permit imprint under 243.3 must enter such items through a business mail entry unit (BMEU) or, when authorized by the district BMEU manager, through an authorized detached mail unit (DMU) at a mailer's plant. The Postal Service will return improperly presented items to the sender for proper entry and acceptance.

245.2 Items Bearing a Completed Customs Declaration With an Electronic Round Date

First-Class Mail International items that have the mailing label, customs form (including an electronic round stamp), and postage prepared and paid online through the eBay integrated shipping solution or an authorized PC Postage vendor Web site may be deposited by one of the following methods:

a. At a Postal Service retail counter.

b. Into a Postal Service lobby drop.

c. Into an Automated Postal Center (APC) drop.

d. In a collection box.

e. In a customer mailbox.

245.3 Items Not Requiring a Customs Declaration

245.31 Items Weighing 13 Ounces or Less and Paid With Postage Stamps

A First-Class Mail International letter-size or flat-size item weighing 13 ounces or less, bearing only postage stamps, and not requiring a customs declaration (see 123.6) may be deposited by one of the following methods:

a. At a Postal Service retail counter.

b. Into a Postal Service lobby drop.

c. Into an Automated Postal Center (APC) drop.

d. In a collection box.

e. In a customer mailbox.

245.32 Items Weighing More Than 13 Ounces and Paid With Postage Stamps

A customer may *not* deposit a First-Class Mail International letter-size or flat-size item weighing more than 13 ounces, bearing only postage stamps, and not requiring a customs declaration (see 123.6) into a collection box, Postal Service lobby drop, Automated Postal Center (APC) drop, or customer mailbox, or at a Postal Service dock or other unattended location. Customers must present such items to an employee at a Post Office retail service counter. The Postal Service will return improperly presented items to the sender for proper entry and acceptance.

245.4 Items Paid With Methods Other Than Postage Stamps

First-Class Mail International letter-size or flat-size items paid with online postage, postage meters, or information-based indicia (IBI) weighing less than 16 ounces and not requiring a customs declaration (see 123.6) may be deposited by one of the following methods:

a. At a Postal Service retail counter.

b. Into a Postal Service lobby drop.

c. Into an Automated Postal Center (APC) drop.

d. In a collection box.

e. In a customer mailbox.

250 (Reserved)

260 Direct Sacks of Printed Matter to One Addressee (M-bags)

261 Description

261.1 General

M-bags are defined as direct sacks of printed matter (see 261.22) sent to a single foreign addressee at a single address. There are three types of M-bags: Airmail M-bags, International Priority Airmail (IPA) M-bags, and International Surface Air Lift (ISAL) M-bags. All M-bags are subject to the following conditions of mailing:

a. Maximum weight of a sack: 66 pounds (including the tare weight of the sack). Lower maximum weights apply to certain countries. See the Individual Country Listings.

b. Availability: All destinations that are referenced in the Individual Country Listings for Airmail M-bags, in Exhibit 292.452 for IPA M-bags, and in Exhibit 293.452 for ISAL M-bags.

c. Identification: PS Tag 158, *M-bag Addressee Tag*, must be completed and attached to the neck of the sack.

d. Postage: The applicable postage for Airmail M-bags, International Priority Airmail (IPA), and International Surface Air Lift (ISAL) must be affixed to PS Tag 158.

e. Extra services: Certificate of mailing is available. Registry and insurance are not available.

261.2 Eligibility

261.21 Printed Matter

Printed matter is admissible in M-bags. Articles that meet the definition of “printed matter” include newspapers, magazines, journals, books, sheet music, catalogs, directories, commercial advertising, and promotional matter. “Printed matter” is defined as follows:

a. Papers upon which words, letters, characters, figures, images, or any combinations thereof appear.

b. Papers that do not have the character of a bill or statement of account.

c. Papers that do not have the character of current and personal correspondence.

261.22 Other Articles

Certain other articles may be enclosed in M-bags, provided that all of the following conditions of mailing are met:

a. The articles being sent are limited to discs, tapes, and cassettes; commercial samples shipped by manufacturers and distributors; or other non-dutiable commercial articles or informational materials that are not subject to resale.

b. The articles are related to the printed matter (see 261.21) with which they are being mailed.

c. The articles are affixed to or are otherwise combined with the accompanying printed matter.

d. The combined weight of each printed matter mailpiece and the related articles may not exceed 4 pounds.

e. The M-bag must be accompanied by a fully completed PS Form 2976, *Customs Declaration CN 22 — Sender's Declaration*, which is to be affixed to PS Tag 158, *M-bag Addressee Tag*.

261.23 Mail Not Sealed Against Inspection

M-bags are not sealed against inspection. Regardless of physical closure, the mailing of an M-bag, including an airmail, IPA, or ISAL M-bag, constitutes consent by the mailer to inspection of the contents.

262 Postage Prices and Fees

262.1 Airmail M-bags

Airmail M-bags may contain any type of allowable printed matter and certain other articles (see 261.22). See the Individual Country Listings for the Price Group and maximum weight limit for each country. Each Airmail M-bag that weighs 11 pounds or less is charged the applicable 11-pound price; a bag that exceeds 11 pounds is charged the applicable 11-pound price and the applicable per-pound price for each additional pound or fraction of a pound over 11 pounds.

262.2 International Priority Airmail (IPA) M-bags

IPA M-bags that are entered in conjunction with an IPA mailing (see 292) may contain all types of allowable printed matter and certain other items (see 261.22). See Notice 123, *Price List*, for the postage price that applies to M-bags mailed to each IPA destination country. Each full-service IPA M-bag that weighs 11 pounds or less is charged the applicable 11-pound price; a bag that exceeds 11 pounds is charged the applicable 11-pound price and the applicable per-pound price for each additional pound or fraction of a pound over 11 pounds. Each International Service Center (ISC) drop shipment IPA M-bag that weighs 5 pounds or less is charged the applicable 5-pound price; a bag that exceeds 5 pounds is charged the applicable 5-pound price and the applicable per-pound price for each additional pound or fraction of a pound over 5 pounds.

262.3 International Surface Air Lift (ISAL) M-bags

ISAL M-bags that are entered in conjunction with an ISAL mailing (see 293) may contain all types of allowable printed matter and certain other articles (see 261.22). See Notice 123, *Price List*, for the postage price that applies to M-bags mailed to each ISAL destination country. Each full-service ISAL M-bag that weighs 11 pounds or less is charged the applicable 11-pound price; a bag that exceeds 11 pounds is charged the applicable 11-pound price and the applicable per-pound price for each additional pound or fraction of a pound over 11 pounds. Each International Service

Center (ISC) drop shipment ISAL M-bag that weighs 5 pounds or less is charged the applicable 5-pound price; a bag that exceeds 5 pounds is charged the applicable 5-pound price and the applicable per-pound price for each additional pound or fraction of a pound over 5 pounds.

262.4 Postage Calculation

The amount of postage paid by the mailer is determined by the weight of the sack's contents, rounded to the next whole pound. For example, if the total weight of the printed matter in an M-bag is 23.2 pounds, exclusive of the tare weight of the sack, the postage computation is based on a total content weight of 24 pounds.

262.5 Stamps, Postage Evidencing Systems, PVI Labels, or Permit Imprint

M-bag postage can be paid by the following means:

a. By affixing postage stamps, meter stamps, PC Postage, or a postage validation imprinter (PVI) label to PS Tag 158, *M-bag Addressee Tag.*

b. By placing a permit imprint on PS Tag 158, *M-bag Addressee Tag,* and making payment through an advance deposit account. When this method of payment is used, the minimum quantity requirement (i.e., 200 pieces or 50 pounds) that is normally a prerequisite for permit imprint usage (see 152.43) does *not* apply. The postage amount must be accounted for on PS Form 3700, *Postage Statement — International Mail*.

263 Weight and Size Limits

263.1 Weight Limits

There is no minimum weight requirement for the entry of Airmail M-bags, IPA M-bags, or ISAL M-bags. The maximum weight limit for M-bags is 66 pounds, which includes the tare weight of the sack. Lower maximum weights apply to certain countries. See the Individual Country Listings.

263.2 Size Limits

There are no defined size limits so long as articles being sent can be enclosed in the mailbag.

264 Mail Preparation

264.1 Marking

Printed matter, or printed matter in combination with merchandise items, must be placed into one or more individual packages bearing the name and address of the sender and addressee. Each package must be marked "POSTAGE PAID — M-BAG."

264.2 Sacking and Labeling

264.21 Equipment

The sacks and mailing tags (i.e., PS Tag 158) needed for M-bag entry can be obtained from local Post Office facilities. Airmail pouches, if available, will be furnished to customers who intend to utilize that type of M-bag service.

264.22 Tagging

PS Tag 158, M-bag Addressee Tag, must be completed for all types of M-bags and attached to the neck of the sack. It must bear the requisite amount of stamped or metered postage or the sender's authorized permit imprint or indicia (see 262.4). For IPA M-bags, mailers must also attach PS Tag 115, *International Priority Airmail*. For ISAL M-bags, mailers must also attach PS Tag 155, *Surface Airlift Mail*.

264.23 Multiple Sacks to One Addressee

If multiple sacks are sent to the same foreign addressee, PS Tag 158 must be marked with an identifiable fraction such as 1/5, 2/5, 3/5, etc.

264.24 Country Destination Name

The Post Office facility must label the sack with the name of the country of destination in large letters and the name of the U.S. dispatching exchange office in small letters (for example, Great Britain via New York), and send it to that exchange office for dispatch to destination.

264.3 Customs Forms Required

M-bags that contain potentially dutiable printed matter or any category of printed matter that is combined with allowable merchandise items (see 261.22) must be accompanied by a fully completed PS Form 2976, which is to be affixed to PS Tag 158, *M-bag Addressee Tag*. The maximum allowable value is $400.

265 Extra Services

Certificate of mailing is available. Return receipts, restricted delivery, registry service, and insurance are not available with M-bags.

270 Free Matter for the Blind or Other Physically Handicapped Persons

271 Description

271.1 General

Subject to the standards below and DMM 703, matter may be entered free of postage if mailed by or for the use of blind or other persons who cannot read or use conventionally printed materials due to a physical handicap. Matter for the blind in international mail is limited to the following:

a. Books, periodicals, and other matter (including unsealed letters) impressed in Braille or other special type for the use of the blind.

b. Plates for embossing literature for the blind.

c. Discs, tapes, or wires bearing voice recordings and special paper intended solely for the use of the blind, provided they are sent by or addressed to an officially recognized institution for the blind.

d. Sound recordings or tapes that are mailed by a blind person.

271.2 Eligibility

Eligible participants must be residents of the United States, which includes territories, insular possessions, and the District of Columbia, or American citizens domiciled abroad.

271.3 Matter Sent to or by Blind or Other Physically Handicapped Persons

Acceptable matter and the conditions for mailing such matter that may be sent free under this standard are limited to the items described in 271 and DMM 703.

272 Postage Prices

Postage is free for the following eligible items marked “Free Matter for the Blind or Physically Handicapped”:

a. A First-Class Mail International item (including Priority Mail International Flat Rate Envelopes or Small Flat Rate Priced Boxes).

b. A Priority Mail International parcel weighing up to 15 pounds.

The sender must pay the applicable postage based on the weight and destination (zone) of the article when sending eligible free matter in a Priority Mail International parcel weighing more than 15 pounds, by Global Express Guaranteed service, or by Express Mail International service.

The sender must pay fees for registry service or insurance (see 275).

273 Weight and Size Limits

273.1 Weight Limit

For First-Class Mail International items (including Priority Mail International Flat Rate Envelopes and Small Flat Rate Priced Boxes), the weight limit is 4 pounds.

For Priority Mail International items (excluding Flat Rate Envelopes and Small Flat Rate Priced Boxes), the weight limit is 15 pounds.

Note: The 15-pound weight limit for Priority Mail International parcels also applies to any USPS-produced Flat Rate packaging that may have higher maximum limits when not mailed as Free Matter for the Blind or Physically Handicapped.

273.2 Size Limits

For First-Class Mail International items, see 241.2.

For Priority Mail International parcels, see 231.2.

274 Mail Preparation

274.1 Addressing

See 122.

274.2 Marking

In addition to the markings required in 244.2 for First-Class Mail International items and in 234.2 for Priority Mail International parcels, free matter must be marked “Free Matter for the Blind or Handicapped” in the upper right-hand corner of the address side of the mailpiece.

274.3 Sealing

Matter for the blind must *not* be sealed, even if registered.

274.4 Packaging

274.41 Mail Not Sealed Against Inspection

Free Matter for the Blind or Other Physically Handicapped Persons items mailed under 270 are not sealed against inspection (see ASM 274). Items must be prepared in such a way that the contents are protected but inspection of the contents is not hindered.

274.42 Types of Containers

The items must be placed in wrappers, in rolls, between cardboard, or in bags, boxes, *unsealed* envelopes, or containers. Dangerous fasteners may not be used. The articles may also be tied with string or twine in a manner that will permit them to be easily untied.

275 Extra Services

The sender must pay for extra services for Free Matter for the Blind or Other Physically Handicapped Persons. Only the following extra services are authorized:

a. Registered Mail service for First-Class Mail International items and for Priority Mail International Flat Rate Envelopes or Small Flat Rate Priced Boxes.

b. Insurance service for Priority Mail International parcels up to 15 pounds.

276 Customs Forms Required

As described in Exhibit 123.61, a fully completed PS Form 2976 or 2976-A must be affixed to each item. The known mailer exemption in IMM 123.62 does not apply to free matter for the blind or other physically handicapped persons.

280 (Reserved)

290 Commercial Services

291 (Reserved)

292 International Priority Airmail (IPA) Service

292.1 Description

292.11 General

International Priority Airmail™ (IPA®) service is available for volume mailings of all First-Class Mail International postcards, letters, large envelopes (flats), and packages (small packets). The sender must prepare mailpieces in accordance with the shape-based requirements of First-Class Mail International service (see 240) and the requirements of this subchapter. Separate prices are provided for International Service Center (ISC) drop shipments, presorted mail, and worldwide nonpresort mail. Volume incentives are available through customized agreements.

292.12 Mail Sealed Against Inspection

With the exception of M-bags (see 261.23), IPA mailpieces are sealed against inspection.

292.13 IPA M-bags

IPA M-bags (direct sacks of printed matter to one addressee) may be entered in conjunction with an IPA mailing, are subject to the provisions of 260, and may be sent to all destination countries that are referenced in Exhibit 292.452. When using this method of mail preparation, the sender must complete PS Tag 115, *International Priority Airmail*, and PS Tag 158, *M-bag Addressee Tag*. Tags must be securely attached to the neck of the sack.

292.2 Eligibility

292.21 Qualifying Mailpieces

To qualify for IPA service, a mailpiece must meet the First-Class Mail International characteristics as defined in 141.5. Mailpieces do not have to be of the same size and weight to qualify. Any item sent with IPA service must conform to the weight and size limits for First-Class Mail International postcards, letters, large envelopes (flats), and packages (small packets) as described in 240.

292.22 Availability

IPA service is available to all the foreign countries that are as listed in Exhibit 292.452, which shows the price group assigned to each country.

292.23 Minimum Quantity Requirements

292.231 Minimum Quantity

All mailings must meet a minimum weight quantity of 50 pounds. To achieve the 50-pound minimum, mailings may include a combination of presort mail, worldwide nonpresort mail, or M-bags.

292.232 **Presort Eligibility — Full Service**

Only a direct country sack containing a minimum of 5 pounds qualifies for the presort price. All remaining mail must be prepared and paid at the worldwide nonpresort price.

292.233 **Presort Eligibility — ISC Drop Shipment**

Only a direct country sack containing a minimum of 5 pounds or a mixed country sack containing a minimum of 5 pounds qualifies for the presort price. All remaining mail must be prepared and paid at the worldwide nonpresort price.

292.24 Dutiable Items

Dutiable items may be sent in accordance with the applicable rules in this subchapter for each respective category of mail. Priority Mail International items, either ordinary or insured, may not be mailed with IPA service.

292.25 Customs Forms Requirements

See 123 for customs forms requirements.

292.26 Extra Services

Extra services are not available for items sent with IPA service.

292.3 Prices and Postage Payment Methods

292.31 Prices

IPA service has two price options: a presort price with 15 price groups and a worldwide nonpresort price. Both options offer full-service prices for mail deposited at offices other than the drop shipment offices listed in 292.532, and drop shipment prices for mail deposited at one of the drop shipment offices. The per-piece price and per-pound price are shown in Notice 123, *Price List*. The per-piece price applies to each piece regardless of its weight. The per-pound price applies to the net weight (gross weight minus tare weight of sack or tray) of the mail for the specific price group. Fractions of a pound are rounded to the next whole pound for postage calculation.

292.32 Computation of Postage

Postage is computed on PS Form 3700, *Postage Statement — International Mail.*

292.321 **Computing Worldwide Nonpresort Prices**

Compute postage at the worldwide nonpresort price as follows:

1. Multiply the number of pieces in the mailing by the applicable per-piece price.
2. Multiply the net weight (in whole pounds) of the entire mailing by the applicable per-pound price.
3. Add together the two totals in steps 1 and 2.

292.322 **Computing Presort Prices**

Compute postage at the presorted price as follows:

1. Multiply the number of pieces in the mailing destined for countries in a specific price group by the appropriate per-piece price.

2. Multiply the net weight (in whole pounds) of those pieces by the corresponding per-pound price.
3. Add together the two totals in steps 1 and 2.

292.33 Postage Payment Methods

292.331 General

Postage must be paid by postage meter, permit imprint, or precanceled stamps (see DMM 604).

292.332 Postage Meter

Payments made by postage meter are subject to the following standards:

a. *Piece Price.* The applicable per-piece postage shown in Notice 123, *Price List,* must be affixed to each mailpiece when paying with a meter. A mailer who has an ICM agreement must affix the applicable per-piece postage as set forth in the ICM agreement.

b. *Pound Price.* Postage for the pound price portion must be paid either by meter stamp(s) attached to the postage statement or from the mailer's authorized permit imprint advance deposit account.

c. *Postage Endorsement.* Each piece must be legibly endorsed with the words "INTERNATIONAL PRIORITY AIRMAIL."

d. *Specifications for Endorsement.* The endorsement required in 292.332c must appear on the address side of each piece and must be applied by a printing press, hand stamp, or other similar printing device. It must appear either above the name of the addressee and to the left or below the postage, or adjacent to the meter stamp in either the postal inscription slug area or ad plate area. If the postal endorsement appears in the ad plate area, no other information may appear in the ad plate. The endorsement may not be typewritten or hand-drawn. The endorsement is not considered adequate if it is included as part of a decorative design or advertisement.

e. *Unmarked Pieces.* Unmarked pieces lacking the postage endorsement are subject to the First-Class Mail International single-piece price.

f. *Drop Shipment of Metered Mail.* A mailer who wants to enter metered IPA mail at a Post Office facility other than where the meter is licensed must obtain a drop shipment authorization. To obtain an authorization, the mailer must submit a written request to the postmaster at the office where the mail will be entered (see DMM 705).

292.333 Precanceled Stamps

Payments made by precanceled stamps are subject to the following standards:

a. *Piece Price.* The same denomination of stamp must be affixed to every piece in the mailing.

b. *Pound Price.* Additional postage is paid at the time of mailing by advance deposit account or meter stamp affixed to the back of the accompanying postage statement.

c. *Postage Endorsement.* Each piece must be legibly endorsed with the words "INTERNATIONAL PRIORITY AIRMAIL."

d. *Specifications for Endorsement.* The endorsement required in 292.333c must appear on the address side of each piece and must be applied by a printing press, hand stamp, or other similar printing device. It must appear either above the name of the addressee and to the left or below the postage, or adjacent to the precanceled stamp. The endorsement may not be typewritten or hand-drawn. The endorsement is not considered adequate if it is included as part of a decorative design or advertisement.

e. *Unmarked Pieces.* Unmarked pieces lacking the postage endorsement are subject to the First-Class Mail International single-piece price.

292.334 Permit Imprint

Mailers may use a permit imprint for mailings that contain identical weight pieces. Any of the permit imprint formats shown in Exhibit 152.44 is acceptable but must include the "INTL PRIORITY AIRMAIL" rate marking. Postage is calculated as described in 292.32 and is deducted from the mailer's advance deposit account. Permit imprints must not denote bulk mail, nonprofit, or other domestic or special mail. Mailers may use permit imprint with nonidentical weight pieces only if authorized to use postage mailing systems under DMM 705.

292.4 Mail Preparation

292.41 Addressing and Return Address

IPA mailpieces are subject to the addressing requirements contained in 122, including the requirement of a U.S.-origin return address as defined in 122.2.

a. ***Exception — Canada:*** IPA items destined for Canada must have the applicable alphanumeric postcode included in the delivery address. See 122.1k for the address formatting requirements that generally apply to mailpieces sent to Canada.

b. ***Exception — Direct Country Sacks:*** IPA items in direct country sacks (see 292.461) are not subject to the interline addressing requirement that is specified in 122.1d. At the sender's risk, the English translation of the destination post office or city name may be omitted from an address that is printed in Russian, Greek, Arabic, Hebrew, Cyrillic, Japanese, or Chinese characters. An English translation of the country name (for example, Japan) is still required on the individual mailpieces.

292.42 Marking

292.421 Letter-Size and Flat-Size Mailpieces

The sender should mark "PAR AVION" or "AIR MAIL" on the address side of each piece. Alternatively, the user may use a bordered airmail envelope that contains an "AIR MAIL" endorsement.

292.422 Packages (Small Packets)

Items that might be mistaken for another class of mail because of their size, weight, or appearance should be marked "LETTER-POST" on the address side.

292.43 Sealing and Packaging

Mailers must meet the following sealing and packaging standards for IPA mail:

Mixed Country and Worldwide Nonpresort Price. All mailpieces entered at the mixed country and worldwide nonpresort price must meet the sealing and packaging methods for First-Class Mail International service under IMM 244.3 and 244.4.

Direct Country Price. Flat-size mailpieces and small packets entered at the direct country price must meet the sealing and packaging methods for First-Class Mail International service under IMM 244.3 and 244.4. Letter-size mailpieces entered at the direct country price must meet one of the following requirements:

1. The sealing and packaging methods for First-Class Mail International service under IMM 244.3 and 244.4.
2. The physical standards of a machinable letter under DMM 201.3.

292.44 Physical Characteristics and Requirements for All Bundles

The following standards apply:

a. *Thickness.* Bundles of letter-size mail should be no thicker than approximately a handful of mail (4 to 6 inches thick). Bundles of flat-size mail may be thicker than 6 inches but must not weigh more than 11 pounds.

b. *Securing Bundles.* Each bundle must be securely tied to withstand normal transit. Placing rubber bands around the length and then the girth is the preferred method of securing bundles of letter-size mail. Plastic strapping placed around the length and then the girth is the preferred method of securing bundles of flat-size mail.

c. *Separation of Bundles.* Letter-size and flat-size mail must be bundled separately.

d. *Facing of Pieces.* All pieces in bundles must be faced in the same direction.

292.45 Sortation

292.451 Presort Mailings — General

Follow these steps when preparing IPA presort mail:

a. *Full Service.* For presort mailings, all mail that is addressed to an individual country and that contains 5 pounds or more must be sorted into direct country bundles and sacked in direct country sacks. Mail that cannot be made up into direct country sacks must be prepared and entered at the worldwide nonpresort price.

b. *ISC Drop Shipment.* For presort mailings, all mail that is addressed to an individual country and that contains 5 pounds or more must be sorted into direct country bundles and sacked in direct country sacks. All mail that is addressed to individual countries within a single price group and that contains 5 pounds or more must be bundled separately

and sacked in mixed country sacks. Mail that ultimately cannot be made up into direct country sacks or mixed country sacks must be prepared and entered at the worldwide nonpresort price.

Note: There are separate preparation requirements for mail to Canada. See 292.47.

292.452 **Presorted Mail — Direct Country Bundle Label**

Only direct country bundles prepared for mixed country sacks require a label (facing slip). Mailers must complete the label and place it on the address side of the top piece of each bundle in such a manner that it will not become separated from the bundle. The pressure-sensitive labels and optional endorsement lines used domestically for presort mail are prohibited for IPA service. Bundle labels must contain the following information:

Line 1: Foreign Office of Exchange Code. (See Exhibit 292.452.)

Line 2: Country Labeling Name. (See Exhibit 292.452.)

Line 3: Mailer, Mailer Location (City and State).

Example:

VIE
AUSTRIA
ABC COMPANY WASHINGTON DC

Exhibit 292.452 (p. 1)
IPA Country Price Groups and Foreign Office of Exchange Codes

Country Labeling Name	Foreign Office of Exchange Code	Price Group
Afghanistan	KBL	15
Albania	TIA	12
Algeria	ALG	15
Andorra, via Spain	MAD	11
Angola	LAD	15
Anguilla	AXA	13
Antigua and Barbuda	ANU	13
Argentina	BUE	13
Armenia	EVN	15
Aruba	AUA	13
Ascension, via Great Britain	LON	12
Australia [1]	SYD	9
Austria	VIE	11
Azerbaijan	BAK	15
Bahamas	NAS	13
Bahrain	BAH	15
Bangladesh	DAC	15
Barbados	BGI	13
Belarus	MSQ	12
Belgium	BRU	11
Belize	BZE	13
Benin	COO	15
Bermuda	SGE	13
Bhutan, via Great Britain	LON	15
Bolivia	LPB	13

Exhibit 292.452 (p. 2)
IPA Country Price Groups and Foreign Office of Exchange Codes

Country Labeling Name	Foreign Office of Exchange Code	Price Group
Bosnia-Herzegovina	SJJ	12
Botswana	GBE	15
Brazil	CWB	13
British Virgin Islands	RAD	13
Brunei Darussalam	BWN	14
Bulgaria	SOF	12
Burkina Faso	OUA	15
Burma (Myanmar)	RGN	15
Burundi	BJM	15
Cambodia	PNH	14
Cameroon	DLA	15
Canada	See 292.47 Canadian Labeling Information	1
Cape Verde	RAI	15
Cayman Islands	GCM	13
Central African Republic	BGF	15
Chad	NDJ	15
Chile	SCL	13
China	BJS	14
Colombia	BOG	13
Comoros Islands, via France	CDG	15
Congo, Dem. Rep. of the	FIH	15
Congo, Rep. of the	BZV	15
Cook Islands	RAR	11
Costa Rica	SJO	13
Cote d'Ivoire	ABJ	15
Croatia	ZAG	12
Cuba	HAV	13
Cyprus	LCA	15
Czech Republic	PRG	12
Denmark	CPH	11
Djibouti	JIB	15
Dominica	DOM	13
Dominican Republic	SDQ	13
Ecuador	UIO	13
Egypt	CAI	15
El Salvador	SAL	13
Equatorial Guinea	SSG	15
Eritrea	ASM	15
Estonia	TLL	12
Ethiopia	ADD	15
Falkland Islands, via Great Britain	LON	13
Faroe Islands, via Denmark	CPH	12
Fiji	NAN	14
Finland	HEL	11
France[2]	CDG	5
French Guiana	CAY	13
French Polynesia	FAA	14

Exhibit 292.452 (p. 3)
IPA Country Price Groups and Foreign Office of Exchange Codes

Country Labeling Name	Foreign Office of Exchange Code	Price Group
Gabon	LBV	15
Gambia	BJL	15
Georgia, Republic of	TBS	15
Germany	FRA	4
Ghana	ACC	15
Gibraltar	GIB	11
Great Britain (includes England, Scotland, Wales, Northern Ireland, Guernsey, Jersey, Alderney, Sark, and The Isle of Man)	LON	3
Greece	ATH	11
Greenland, via Denmark	CPH	11
Grenada	GND	13
Guadeloupe	PTP	13
Guatemala	GUA	13
Guinea	CKY	15
Guinea-Bissau	OXB	15
Guyana	GEO	13
Haiti	PAP	13
Honduras	TGU	13
Hong Kong	HKG	14
Hungary	BUD	12
Iceland	REK	11
India	DEL	15
Indonesia	JKT	14
Iran	THR	15
Iraq	BGW	15
Ireland	DUB	11
Israel	TLV	11
Italy	MIL	7
Jamaica	KIN	13
Japan	NRT	10
Jordan	AMM	15
Kazakhstan	ALA	15
Kenya	NBO	15
Kiribati	TRW	14
Korea, Democratic People's Republic of (North), via Hong Kong	HKG	14
Korea, Republic of (South)	SEL	14
Kosovo, Republic of	PRN	12
Kuwait	KWI	15
Kyrgyzstan	FRU	12
Laos	VTE	14
Latvia	RIX	12
Lebanon	BEY	15
Lesotho	MSU	15
Liberia	MLW	15
Libya	TIP	15
Liechtenstein, via Switzerland	ZRH	11
Lithuania	VNO	12

Exhibit 292.452 (p. 4)
IPA Country Price Groups and Foreign Office of Exchange Codes

Country Labeling Name	Foreign Office of Exchange Code	Price Group
Luxembourg	LUX	11
Macao	MFM	12
Macedonia	FRA	12
Madagascar	TNR	15
Malawi	LBE	15
Malaysia	KUL	14
Maldives	MLE	15
Mali	BKO	15
Malta	MAR	15
Martinique	FDF	13
Mauritania	NKC	15
Mauritius	MRU	15
Mexico	MEX	2
Moldova	KIV	15
Monaco	MON	5
Mongolia	ULN	14
Montenegro	TGD	13
Montserrat	MNI	13
Morocco	CAS	15
Mozambique	MPM	15
Namibia	WDH	15
Nauru	INU	14
Nepal	KTM	14
Netherlands	AMS	8
Netherlands Antilles	CUR [3]	13
	SXM [4]	13
New Caledonia	NOU	14
New Zealand [5]	AKL	11
Nicaragua	MGA	13
Niger	NIM	15
Nigeria	LOS	15
Norway	OSL	11
Oman	MCT	15
Pakistan	ISB	15
Panama	PTY	13
Papua New Guinea	BOR	14
Paraguay	ASU	13
Peru	LIM	13
Philippines	MNL	14
Pitcairn Island, via New Zealand	AKL	14
Poland	WAW	12
Portugal (includes Azores and Madeira Islands)	LIS	11
Qatar	DOH	15
Reunion	RUN	15
Romania	BUH	12
Russia	MOW	12
Rwanda	KGL	15

Exhibit 292.452 (p. 5)
IPA Country Price Groups and Foreign Office of Exchange Codes

Country Labeling Name	Foreign Office of Exchange Code	Price Group
Saint Christopher and Nevis	SKB	13
Saint Helena, via Great Britain	LON	15
Saint Lucia	SLU	13
Saint Pierre and Miquelon, via Canada	See 292.47 Canadian Labeling Information	13
Saint Vincent and The Grenadines	KTN	13
San Marino, via Italy	MIL	11
Sao Tome and Principe, via Portugal	LIS	12
Saudi Arabia	DMM	15
Senegal	DKR	15
Serbia, Republic of	BEG	12
Seychelles	SEZ	15
Sierra Leone	FNA	15
Singapore	SIN	14
Slovak Republic (Slovakia)	BTS	12
Slovenia	LJU	12
Solomon Islands	HIR	14
Somalia	Service Suspended	15
South Africa	JNB	15
Spain (includes Canary Islands)	MAD	11
Sri Lanka	CMB	15
Sudan	KRT	15
Suriname	PBM	13
Swaziland	MTS	15
Sweden	STO	11
Switzerland	ZRH	6
Syria	DAM	15
Taiwan	TPE	14
Tajikistan	DYU	15
Tanzania	DAR	15
Thailand	BKK	14
Togo	LFW	15
Tonga	TBU	14
Trinidad and Tobago	POS	13
Tristan da Cunha, via South Africa	JNB	15
Tunisia	TUN	15
Turkey	IST	12
Turkmenistan	ASB	12
Turks and Caicos Islands	GDT	13
Tuvalu, via Fiji	NAN	14
Uganda	KLA	15
Ukraine	IEV	15
United Arab Emirates	DXB	15
Uruguay	MVD	13
Uzbekistan	TAS	15
Vanuatu	VLI	14
Vatican City	VAT	11
Venezuela	CCS	13

Exhibit 292.452 (p. 6)
IPA Country Price Groups and Foreign Office of Exchange Codes

Country Labeling Name	Foreign Office of Exchange Code	Price Group
Vietnam	SGN	14
Wallis and Futuna Islands, via New Caledonia	NOU	14
Western Samoa	APW	14
Yemen	SAH	15
Zambia	LUN	15
Zimbabwe	HRE	15

1 *At the mailer's option, a finer sortation for IPA items addressed to Australia may be used. If this option is chosen, items addressed with postal codes beginning with 0, 1, 2, 4, and 9 and uncoded mail should be sorted and packaged to Sydney. Direct country sacks should be tagged to Sydney as well. Both the three-letter exchange office code ("SYD") and the country name ("Australia") should be entered in the "To" block of PS Tag 178,* Airmail Bag Label LC (CN 35/AV 8) (white)*. Items addressed with postal codes beginning with 3, 5, 6, 7, and 8 should be sorted and packaged to Melbourne. Direct country sacks should be tagged to Melbourne as well. Both the three-letter exchange office code ("MEL") and the country name ("Australia") should be entered in the "To" block of PS Tag 178.*

2 *For all destinations to France other than Monaco. For Monaco, see the entry for Monaco in this exhibit.*

3 *Includes Bonaire and Curacao.*

4 *Includes Saba and Saint Eustatius.*

5 *For all destinations to New Zealand other than Cook Islands. For Cook Islands, see the entry for Cook Islands in this exhibit.*

292.453 Worldwide Nonpresort Mail — Bundles

IPA mail paid at the worldwide nonpresort price must be made into bundles as defined in 292.44. Letters and flats must be bundled separately, although nonidentical pieces may be commingled within each of these categories. Pieces that cannot be bundled because of their physical characteristics must be placed loose in the sack and do not require labeling (facing slips).

292.46 Sacking Requirements

292.461 Direct Country Sack (5 Pounds or More)

The following standards apply:

a. *General.* When there are 5 pounds or more of mail addressed to the same country, the mail must be enclosed in a direct country sack. All types of mail, including letter-size bundles, flat-size bundles, and loose items, can be commingled in the same sack for each destination and counted toward the 5-pound minimum. The maximum weight of the sack and contents must not exceed 66 pounds.

b. *Direct Country Sack Tags*. For each direct country sack, the mailer must do the following:

(1) Complete PS Tag 178, *Airmail Bag Label LC (CN 35/AV 8) (white)*, which is a white tag designed to route the sack to a specific country. The mailer must complete the "To" block showing the destination country and the foreign office of exchange code as listed in Exhibit 292.452. Postal Service personnel — not the mailer — must complete the blocks for date, weight, and dispatch information.

(2) Complete PS Tag 115, *International Priority Airmail*, which is a pink tag that identifies the mail to ensure it receives priority handling. On the back of PS Tag 115, the mailer must specify the price group as listed in Exhibit 292.452.

(3) Attach both PS Tag 178 and PS Tag 115 to the neck of the sack.

c. *Direct Country Sack Label.* Mailers who claim the ISC drop shipment price and enter their mail at an authorized drop shipment location under 292.532 are not required to prepare sack labels. Mailers who claim the full-service price must complete sack labels as follows (see Exhibit 292.461 for the list of U.S. Exchange Offices):

Line 1: Appropriate U.S. Exchange Office and Routing Code
Line 2: Contents — DRX COUNTRY
Line 3: Mailer, Mailer Location

Example:

```
ISC NEW YORK NY     003
IPA — DRX COUNTRY
ABC STORE ALBANY NY
```

Exhibit 292.461
Labeling of IPA Mail to Postal Service Exchange Offices (Full-service only)

IPA Acceptance Office 3-Digit ZIP Code Prefix	U.S. Exchange Office and Routing Code for Line 1
005, 010–089, 100–212, 214–268, 270–297, 400–418, 420–427, 470–477	ISC NEW YORK NY 003
006–009, 298–339, 341–342, 344, 346–347, 349–352, 354–399	ISC MIAMI FL 33112
424, 430–469, 478–516, 520–528, 530–532, 534–535, 537–551, 553–567, 570–577, 580–588, 600–620, 622–631, 633–641, 644–658, 660–662, 664–681, 683–693, 700–701, 703–708, 710–714, 716–731, 733–741, 743–799, 885	ISC CHICAGO IL 60290
590–599, 800–816, 820–838, 840–847, 893–895, 897–898, 937–961, 970–986, 988–999	ISC SAN FRANCISCO CA 94013
850–853, 855–857, 859–860, 863–865, 870–875, 877–884, 889–891, 900–908, 910–928, 930–936	ISC LOS ANGELES CA 900
967–969	P&DC HONOLULU HI 967

292.462 **Mixed Country Sacks (5 Pounds or More — ISC Drop Shipment Only)**

The following standards apply:

a. *General.* When mail is prepared under the ISC drop shipment option, direct country bundles destined to a specific country that cannot be made up in direct country sacks must be prepared in a mixed country sack. A mixed country sack must be prepared for each price group. Only countries in price groups 11 through 15 are eligible for this price. The maximum weight of the sack and the contents must not exceed 66 pounds.

b. *Mixed Country Sack Tags.* The mailer must affix PS Tag 115, *International Priority Airmail*, to mixed country sacks. PS Tag 115 identifies the mail to ensure it receives priority handling. The mailer must specify the price group on the back of PS Tag 115.

292.463 Worldwide Nonpresort Mail Sacks

The following standards apply:

a. *General.* The working bundles of mixed country mail and loose items must be enclosed in sacks unless other equipment is specified by the acceptance office. Nonpresorted letter-size mail may be presented in trays if authorized by the acceptance office. The maximum weight of the sack and the contents must not exceed 66 pounds.

Note: Working bundles of mixed country mail cannot be enclosed in mixed country sacks.

b. *Worldwide Nonpresort Sack Tags.* The mailer must affix PS Tag 115, *International Priority Airmail*, to worldwide nonpresort sacks. PS Tag 115 identifies the mail to ensure it receives priority handling. The mailer must specify "WW" (for "worldwide") on the back of PS Tag 115.

c. *Worldwide Nonpresort Sack Label.* Mailers who claim the ISC drop shipment price and enter their mail at an authorized drop shipment location under 292.532 are not required to prepare sack labels. Mailers who claim the full service price must complete sack labels as follows (see Exhibit 292.461 for the list of U.S. Exchange Offices):

Line 1: Appropriate U.S. Exchange Office and Routing Code
Line 2: Contents WKG
Line 3: Mailer, Mailer Location

Example:

ISC MIAMI FL	33112
IPA — WKG	
ABC COMPANY MIAMI FL	

292.47 Mail Preparation for Canada

Mailers must prepare letter-size, flat-size, and package-size items destined to Canada in separate containers. To qualify for the presort price, the same eligibility requirements apply as for full service (see 292.232) or ISC drop shipment (see 292.233). If the total mailing contains less than 5 pounds of mail for Canada, then the mail qualifies only for the worldwide nonpresort price but may be included with mail for other countries. Mailings that exclusively contain worldwide nonpresort mail to Canada have a 50-pound minimum, and mailers must prepare them under 292.453 and 292.463. Mailers must prepare presorted IPA mail (full-service price and ISC drop shipment price) to Canada as follows:

a. *Letter-Size and Flat-Size Mail*. Prepare letter-size items in letter trays, either 1-foot or 2-foot, depending on volume. Prepare flat-size items in flat trays. Face all letter-size items and flat-size items in the same direction. Ensure that all trays are full enough to keep the mail from mixing during transportation. Cover (i.e., "sleeve") all letter-size and flat-size trays and secure them with strapping. Do not prepare the content of trays in bundles. In addition, the mailer must complete PS Tag 115, *International Priority Airmail*, must write "Canada" on the front side of the tag, and must tape the tag to the tray sleeve.

b. *Packages.* Prepare package-size items (i.e., items that cannot be prepared in trays because of their size or shape) loose in sacks. Affix PS Tag 178, *Airmail Bag Label LC (CN 35/AV 8) (white)*, to the neck of the sack and write Canada in the "To" block of the tag. In addition, affix PS Tag 115, *International Priority Airmail*, to the neck of the sack and write "Canada" on the back of the tag.

c. *Direct Country Container Label.* Mailers who claim the ISC drop shipment price and enter their mail at an authorized drop shipment location under 292.532 are not required to use container labels. Mailers who claim the full-service price must identify each container (letter tray, flat tray, or sack) to show the Canadian destination, followed by the U.S. exchange office code, and the content, as defined in Exhibit 292.47.

Example:

Line 1: Canadian Destination, U.S. Exchange Office Code

Line 2: Contents (i.e., IPA)

Line 3: Mailer, Mailer Location

```
MONTREAL QC FWD      003
IPA
ABC COMPANY NEW YORK NY
```

Exhibit 292.47
Canadian Mail Container Labeling Information (Full-service Only)

ZIP Code of Entry Post Office*	Canadian Destination	U.S. Exchange Office Code	U.S. Exchange Office (or ISC)	Optional Destination Code for Barcoded Containers
005, 010–089, 100–212, 214–268, 270–297, 400–418, 420–427, 470–471, 476–477	MONTREAL QC FWD	003	JFK	YMQ
006–009, 298–339, 341–342, 344, 346–347, 349–352, 354–399, 723	MONTREAL QC FWD	33112	MIA	YMQ
430–469, 472–475, 478–516, 520–528, 530–532, 534–535, 537–551, 553–567, 570–577, 580–588, 600–620, 622–631, 633–641, 644–658, 660–662, 664–681, 683–693, 700–701, 703–708, 710–714, 716–722, 724–731, 733–741, 743–816, 822–831, 840–847, 870–875, 877–885, 893, 897–898	TORONTO ON FWD	60290	ORD	For IPA letters and flats: TOR. For IPA packages: YTO.
590–599, 820–821, 832–838, 894–895, 937–961, 970–986, 988–999	VANCOUVER BC FWD	94013	SFO	YVR
850–853, 855–857, 859–860, 863–865, 889–891, 900–908, 910–928, 930–936	VANCOUVER BC FWD	90899	LAX	YVR
967–969	VANCOUVER BC FWD	96820	HNL	YVR

* *The "ZIP Code of Entry Post Office" column is relevant only for mailings claimed at the full-service price (i.e., not drop shipped at an ISC) to determine their Canadian destination and U.S. exchange office code container information.*

292.5 Mail Entry and Deposit

292.51 Separation by Price Group

The mailer must specify the price group on the back of PS Tag 115 (for example, with “1” for Canada or “WW” for worldwide nonpresort) and must physically separate the sacks by price group at the time of mailing.

292.52 Full Service

Mailings must be deposited at a Post Office facility where bulk mail is accepted and where the mailer holds an advance deposit account or postage meter license.

292.53 Drop Shipment

292.531 General

To qualify for the drop shipment price, mailers must present the mail to one of the locations in 292.532. The mailer must pay postage at the drop shipment location either through an advance deposit account or postage meter license at the serving Post Office facility. As an alternative, mailers who are participating in the plant-verified drop shipment (PVDS) program may have the mail verified, accepted, and paid for at the mailer’s plant or at the origin Post Office facility serving the mailer’s plant if authorized under DMM 705. PVDS mail must be transported by the mailer to the drop shipment location, and the mail must be accompanied by PS Form 8125, *Plant-Verified Drop Shipment (PVDS) Verification and Clearance.*

292.532 Drop Shipment Locations

Drop shipments are available through the offices noted in Exhibit 292.532.

Note: California, Illinois, and New York locations accept both “cleared” mail (mail that has been previously presented and paid for at a BMEU) and “uncleared” mail (mail that *has* not been previously presented and paid for at a BMEU). For Florida locations, refer to footnotes 1 and 2 for special requirements.

Exhibit 292.532
IPA Drop Shipment Locations

State	Facility
California	LOS ANGELES ISC US POSTAL SERVICE 5800 W CENTURY BLVD LOS ANGELES CA 90009-9998 SAN FRANCISCO ISC US POSTAL SERVICE 660 W FIELD RD SAN FRANCISCO CA 94128-3161
Florida	MIAMI ISC [1] US POSTAL SERVICE 11698 NW 25TH ST MIAMI FL 33112-9997 MIAMI PROCESSING AND DISTRIBUTION CTR [2] US POSTAL SERVICE 2200 NW 72ND AVE MIAMI FL 33152-9997
Illinois	JT WEEKER ISC US POSTAL SERVICE 11600 W IRVING PARK RD CHICAGO IL 60666-9998
New York	JOHN F KENNEDY AIRPORT MAIL CTR US POSTAL SERVICE JOHN F KENNEDY INTERNATIONAL AIRPORT BLDG 250 JAMAICA NY 11430-9998

1. *This facility accepts cleared IPA mail only.*
2. *This facility accepts cleared and uncleared IPA mail.*

Note: For drop shipment locations of ISAL mail, refer to 293.532.

293 International Surface Air Lift (ISAL) Service

293.1 Description

293.11 General

International Surface Air Lift® (ISAL®) service is a bulk mailing system that provides fast, economical international delivery of First-Class Mail International items. The price is lower than for First-Class Mail International service. ISAL shipments are flown to the foreign destinations and entered into that country's surface or nonpriority mail system for delivery. Separate prices are provided for International Service Center (ISC) drop shipments, presorted mail, and nonpresorted mail. Volume incentives are available through customized agreements.

293.12 Mail Sealed Against Inspection

With the exception of M-bags (see 261.23), ISAL mailpieces are sealed against inspection.

293.13 ISAL M-bags

ISAL M-bags (direct sacks of printed matter to one addressee) may be entered in conjunction with an ISAL mailing, are subject to the provisions of 260, and may be sent to all destination countries that are referenced in Exhibit 293.452. When using this method of mail preparation, the sender must complete PS Tag 155, *Surface Airlift Mail,* and PS Tag 158, *M-bag Addressee Tag.* Tags must be securely attached to the neck of the sack.

293.2 Eligibility

293.21 Qualifying Mailpieces

To qualify for ISAL service, a mailpiece must meet the First-Class Mail International characteristics as defined in 141.5. Mailpieces do not have to be of the same size and weight to qualify. Any item sent with ISAL service must conform to the weight and size limits for First-Class Mail International postcards, letters, large envelopes (flats), and packages (small packets) as described in 240.

293.22 Availability

ISAL service is available to all the foreign countries that are listed in Exhibit 293.452, which shows the price group assigned to each country.

293.23 Minimum Quantity Requirements

293.231 Minimum Quantity

All mailings must meet a minimum weight quantity of 50 pounds. To achieve the 50-pound minimum, mailings may include a combination of presort mail, worldwide nonpresort mail, or M-bags.

293.232 Presort Eligibility — Full Service

Only a direct country sack containing a minimum of 5 pounds qualifies for the presort price. All remaining mail must be prepared and paid at the worldwide nonpresort price.

293.233 Presort Eligibility — ISC Drop Shipment

Only a direct country sack containing a minimum of 5 pounds or a mixed country sack containing a minimum of 5 pounds qualifies for the presort price. All remaining mail must be prepared and paid at the worldwide nonpresort price.

293.24 Dutiable Items

Dutiable items may be sent in accordance with the applicable rules in this subchapter for each respective category of mail. Priority Mail International items, either ordinary or insured, may not be mailed with ISAL service.

293.25 Customs Forms Requirements

See 123 for customs forms requirements.

293.26 Extra Services

Extra services are not available for items sent with ISAL service.

293.3 Prices and Postage Payment Methods

293.31 Prices

ISAL service has two price options: a presort price with 15 price groups and a worldwide nonpresort price. Both options offer full-service prices for mail deposited at offices other than the drop shipment offices listed in 293.532, and drop shipment prices for mail deposited at one of the drop shipment offices. The per-piece price and per-pound price are shown in Notice 123, *Price List*. The per-piece price applies to each piece regardless of its weight. The per-pound price applies to the net weight (gross weight minus tare weight of sack) of the mail for the specific price group. Fractions of a pound are rounded to the next whole pound for postage calculation.

293.32 Computation of Postage

Postage is computed on PS Form 3700, *Postage Statement — International Mail.*

293.321 Computing Worldwide Nonpresort Prices

Compute postage at the worldwide nonpresort price as follows:

1. Multiply the number of pieces in the mailing by the applicable per-piece price.
2. Multiply the net weight (in whole pounds) of the entire mailing by the applicable per-pound price.
3. Add together the two totals in steps 1 and 2.

293.322 Computing Presort Prices

Compute postage at the presorted price as follows:

1. Multiply the number of pieces in the mailing destined for countries in a specific price group by the appropriate per-piece price.
2. Multiply the net weight (in whole pounds) of those pieces by the corresponding per-pound price.
3. Add together the two totals in steps 1 and 2.

293.33 Postage Payment Methods

293.331 General

Postage must be paid by postage meter, permit imprint, or precanceled stamps (see DMM 604).

293.332 Postage Meter

Payments made by postage meter are subject to the following standards:

a. *Piece Price.* The applicable per-piece postage shown in Notice 123, *Price List,* must be affixed to each mailpiece when paying with a meter. A mailer who has an ICM agreement must affix the applicable per-piece postage as set forth in the ICM agreement.

b. *Pound Price.* Postage for the pound price portion must be paid either by meter stamp(s) attached to the postage statement or from the mailer's authorized permit imprint advance deposit account.

c. *Postage Endorsement.* Each piece must be legibly endorsed with the words "INTERNATIONAL SURFACE AIR LIFT" or "ISAL."

d. *Specifications for Endorsement.* The endorsement required in 292.332c must appear on the address side of each piece and must be applied by a printing press, hand stamp, or other similar printing device. It must appear either above the name of the addressee and to the left or below the postage, or adjacent to the meter stamp in either the postal inscription slug area or ad plate area. If the postal endorsement appears in the ad plate area, no other information may appear in the ad plate. The endorsement may not be typewritten or hand-drawn. The endorsement is not considered adequate if it is included as part of a decorative design or advertisement.

e. *Unmarked Pieces.* Unmarked pieces lacking the postage endorsement are subject to the First-Class Mail International single-piece price.

f. *Drop Shipment of Metered Mail.* A mailer who wants to enter metered ISAL mail at a Post Office facility other than where the meter is licensed must obtain a drop shipment authorization. To obtain an authorization, the mailer must submit a written request to the postmaster at the office where the mail will be entered (see DMM 705).

293.333 **Precanceled Stamps**

Payments made by precanceled stamps are subject to the following standards:

a. *Piece Price.* The same denomination of stamp must be affixed to every piece in the mailing.

b. *Pound Price.* Additional postage is paid at the time of mailing by advance deposit account or meter stamp affixed to the back of the accompanying postage statement.

c. *Postage Endorsement.* Each piece must be legibly endorsed with the words “INTERNATIONAL SURFACE AIR LIFT” or ”ISAL.”

d. *Specifications for Endorsement.* The endorsement required in 293.333c must appear on the address side of each piece and must be applied by a printing press, hand stamp, or other similar printing device. It must appear either above the name of the addressee and to the left or below the postage, or adjacent to the precanceled stamp. The endorsement may not be typewritten or hand-drawn. The endorsement is not considered adequate if it is included as part of a decorative design or advertisement.

e. *Unmarked Pieces.* Unmarked pieces lacking the postage endorsement are subject to the First-Class Mail International single-piece price.

293.334 **Permit Imprint**

Mailers may use a permit imprint for mailings that contain identical weight pieces. Any of the permit imprint formats shown in 152.44 is acceptable but must include the “INTL SURFACE AIR LIFT” rate marking. Postage is calculated as described in 293.32 and is deducted from the mailer’s advance deposit account. Permit imprints must not denote bulk mail, nonprofit, or other domestic or special mail. Mailers may use permit imprint with nonidentical weight pieces only if authorized to use postage mailing systems under DMM 705.

293.4 Mail Preparation

293.41 Addressing and Return Address

ISAL mailpieces are subject to the addressing requirements contained in 122, including the requirement of a U.S.-origin return address as defined in 122.2.

a. ***Exception — Canada:*** ISAL items destined for Canada must have the applicable alphanumeric postcode included in the delivery address. See 122.1k for the address formatting requirements that generally apply to mailpieces sent to Canada.

b. ***Exception — Direct Country Sacks:*** ISAL items in direct country sacks (see 293.461) are not subject to the interline addressing requirement that is specified in 122.1d. At the sender's risk, the English translation of the destination post office or city name may be omitted from an address that is printed in Russian, Greek, Arabic, Hebrew, Cyrillic, Japanese, or Chinese characters. An English translation of the country name (for example, Japan) is still required on the individual mailpieces.

293.42 Marking

293.421 Letter-Size and Flat-Size Mailpieces

The sender should mark "INTERNATIONAL SURFACE AIR LIFT" or "ISAL" on the address side of each piece. Use of bordered airmail envelopes is prohibited.

293.422 Packages (Small Packets)

Items that might be mistaken for another class of mail because of their size, weight, or appearance should be marked "LETTER-POST" on the address side.

293.43 Sealing and Packaging

Mailers must meet the following sealing and packaging standards for ISAL mail:

Mixed Country and Worldwide Nonpresort Price. All mailpieces entered at the mixed country and worldwide nonpresort price must meet the sealing and packaging methods for First-Class Mail International service under IMM 244.3 and 244.4.

Direct Country Price. Flat-size mailpieces and small packets entered at the direct country price must meet the sealing and packaging methods for First-Class Mail International service under IMM 244.3 and 244.4. Letter-size mailpieces entered at the direct country price must meet one of the following requirements:

1. The sealing and packaging methods for First-Class Mail International service under IMM 244.3 and 244.4.
2. The physical standards of a machinable letter under DMM 201.3.

293.44 Physical Characteristics and Requirements for All Bundles

The following standards apply:

a. *Thickness.* Bundles of letter-size mail should be no thicker than approximately a handful of mail (4 to 6 inches thick). Bundles of flat-size mail may be thicker than 6 inches but must not weigh more than 11 pounds.

b. *Securing Bundles.* Each bundle must be securely tied to withstand normal transit. Placing rubber bands around the length and then the girth is the preferred method of securing bundles of letter-size mail. Plastic strapping placed around the length and then the girth is the preferred method of securing bundles of flat-size mail.

c. *Separation of Bundles.* Letter-size and flat-size mail must be bundled separately.

d. *Facing of Pieces.* All pieces in bundles must be faced in the same direction.

293.45 Sortation

293.451 Presort Mailings — General

Follow these steps when preparing ISAL presort mail:

a. *Full Service*. For presort mailings, all mail that is addressed to an individual country and that contains 5 pounds or more must be sorted into direct country bundles and sacked in direct country sacks. Mail that cannot be made up into direct country sacks must be prepared and entered at the worldwide nonpresort price.

b. *ISC Drop Shipment*. For presort mailings, all mail that is addressed to an individual country and that contains 5 pounds or more must be sorted into direct country bundles and sacked in direct country sacks. All mail that is addressed to individual countries within a single price group and that contains 5 pounds or more must be bundled separately and sacked in mixed country sacks. Mail that ultimately cannot be made up into direct country sacks or mixed country sacks must be prepared and entered at the worldwide nonpresort prices.

293.452 Presorted Mail — Direct Country Bundle Label

Only direct country bundles prepared for mixed country sacks require a label (facing slip). Mailers must complete the label and place it on the address side of the top piece of each bundle in such a manner that it will not become separated from the bundle. The pressure-sensitive labels and optional endorsement lines used domestically for presort mail are prohibited for ISAL service. Bundle labels must contain the following information:

Line 1: Foreign Office of Exchange Code. (See Exhibit 293.452.)

Line 2: Country Labeling Name. (See Exhibit 293.452.)

Line 3: Mailer, Mailer Location (City and State).

Example:

VIE AUSTRIA ABC COMPANY WASHINGTON DC

Exhibit 293.452 (p. 1)
ISAL Country Price Groups and Foreign Office of Exchange Codes

Country Labeling Name	Foreign Office of Exchange Code	Price Group
Albania	TIA	12
Algeria	ALG	15
Angola	LAD	15
Argentina	BUE	13
Aruba	AUA	13
Australia	SYD	9
Austria	VIE	11
Bahrain	BAH	15
Bangladesh	DAC	15
Belgium	BRU	11
Belize	BZE	13
Benin	COO	15
Bolivia	LPB	13
Brazil	SAO	13
Bulgaria	SOF	12
Burkina Faso	OUA	15
Cameroon	DLA	15
Canada	See 293.47	1
Central African Republic	BGF	15
Chile	SCL	13
China	BJS	14
Colombia	BOG	13
Congo, Democratic Republic of the	FIH	15
Costa Rica	SJO	13
Cote d'Ivoire (Ivory Coast)	ABJ	15
Cuba	HAV	13
Czech Republic	PRG	12
Denmark	CPH	11
Dominican Republic	SDQ	13
Ecuador	GYE	13
Egypt	CAI	15
El Salvador	SAL	13
Ethiopia	ADD	15
Fiji	NAN	14
Finland	HEL	11
France (includes Corsica)	MIM	5
French Guiana	CAY	13
Gabon	LBV	15
Germany	NIA	4
Ghana	ACC	15
Great Britain	LON	3
Greece	ATH	11
Guatemala	GUA	13
Guyana	GEO	13
Haiti	PAP	13
Honduras	TGU	13
Hong Kong	HKG	14
Hungary	BUD	12
Iceland	REK	11

Exhibit 293.452 (p. 2)
ISAL Country Price Groups and Foreign Office of Exchange Codes

Country Labeling Name	Foreign Office of Exchange Code	Price Group
India	BOM	15
Indonesia	JKT	14
Iran	THR	15
Ireland	AHE	11
Israel	TLV	11
Italy	MIL	7
Jamaica	KIN	13
Japan [1]	KIX	10
	KWS	10
Jordan	AMM	15
Kenya	NBO	15
Korea, Rep. of (South)	SEL	14
Kuwait	KWI	15
Lebanon	BEY	15
Liechtenstein	ZRH	11
Luxembourg	LUX	11
Madagascar	TNR	15
Malaysia	KUL	14
Mali	BKO	15
Mauritania	NKC	15
Mauritius	MRU	15
Mexico	MEX	2
Morocco	CAS	15
Mozambique	MPM	15
Netherlands	AMS	8
Netherlands Antilles	CUR [2]	13
	SXM [3]	13
New Zealand	AKL	11
Nicaragua	MGA	13
Niger	NIM	15
Nigeria	LOS	15
Norway	OSL	11
Oman	MCT	15
Pakistan	KHI	15
Panama	PTY	13
Papua New Guinea	BOR	14
Paraguay	ASU	13
Peru	LIM	13
Philippines	MNL	14
Poland	WAW	12
Portugal	LIS	11
Qatar	DOH	15
Reunion Island	RUN	15
Romania	BUH	12
Russia	MOW	12
Saudi Arabia	DMM	15
Senegal	DKR	15
Singapore	SIN	14
Slovak Republic (Slovakia)	BTS	12
South Africa	JNB	15

Exhibit 293.452 (p. 3)
ISAL Country Price Groups and Foreign Office of Exchange Codes

Country Labeling Name	Foreign Office of Exchange Code	Price Group
Spain (includes Canary Islands)	MAD	11
Sri Lanka	CMB	15
Sudan	KRT	15
Suriname	PBM	13
Sweden	STO	11
Switzerland	ZRH	6
Syria	DAM	15
Taiwan	TPE	14
Tanzania	DAR	15
Thailand	BKK	14
Togo	LFW	15
Trinidad and Tobago	POS	13
Tunisia	TUN	15
Turkey	IST	12
Uganda	KLA	15
United Arab Emirates	DXB	15
Uruguay	MVD	13
Venezuela	CCS	13
Yemen	SAH	15
Zambia	NLA	15
Zimbabwe	HRE	15

[1] *To expedite handling, Japan Post has requested that U.S. shippers make the following optional separation of their ISAL mail:*
- *Mail destined for locations in Japan with post code prefixes 52–93 should be labeled to Osaka International (KIX).*
- *Mail destined for all other post code prefixes should be labeled to Kawasaki (KWS).*
- *ISAL mail that is not optionally separated as specified above should be labeled to Kawasaki (KWS).*

[2] *Includes Bonaire and Curacao.*

[3] *Includes Saba and Saint Eustatius.*

293.453 Worldwide Nonpresort Mail — Bundles

ISAL mail paid at the worldwide nonpresort price must be made into bundles as defined in 293.44. Letters and flats must be bundled separately, although nonidentical pieces may be commingled within each of these categories. Pieces that cannot be bundled because of their physical characteristics must be placed loose in the sack and do not require labeling (facing slips).

293.46 Sacking Requirements

293.461 Direct Country Sack (5 Pounds or More)

The following standards apply:

a. *General.* When there are 5 pounds or more of mail addressed to the same country, the mail must be enclosed in a direct country sack. All types of mail, including letter-size bundles, flat-size bundles, and loose items, can be commingled in the same sack for each destination and counted toward the 5-pound minimum. The maximum weight of the sack and contents must not exceed 66 pounds.

b. *Direct Country Sack Tags*. For each direct country sack, the mailer must do the following:

(1) Complete both sides of PS Tag 155, *Surface Airlift Mail*, which identifies the mail to ensure it receives priority handling. On the front of the tag, the mailer must identify the destination country and the foreign office of exchange code as listed in Exhibit 293.452. On the back of the tag, the mailer must specify the price group as listed in Exhibit 293.452.

(2) Attach PS Tag 155 to the neck of the sack.

c. *Direct Country Sack Label.* Mailers who claim the ISC drop shipment price and enter their mail at an authorized drop shipment location under 293.532 are not required to prepare sack labels. Mailers who claim the full-service price must complete sack labels as follows (see Exhibit 293.461 for the list of U.S. Exchange Offices):

Line 1: Appropriate U.S. Exchange Office and Routing Code
Line 2: Contents — DRX COUNTRY
Line 3: Mailer, Mailer Location

Example:

```
ISC NEW YORK NY   003
ISAL — DRX COUNTRY
ABC STORE ALBANY NY
```

Exhibit 293.461
Labeling of ISAL Mail to Postal Service Exchange Offices (Full-service Only)

ISAL Acceptance Office 3-Digit ZIP Code Prefix	U.S. Exchange Office and Routing Code for Line 1
005, 010–089, 100–212, 214–268, 270–297, 400–418, 420–427, 470–477	ISC NEW YORK NY 003
006–009, 298–339, 341–342, 344, 346–347, 349–352, 354–399	ISC MIAMI FL 33112
424, 430–469, 478–516, 520–528, 530–532, 534–535, 537–551, 553–567, 570–577, 580–588, 600–620, 622–631, 633–641, 644–658, 660–662, 664–681, 683–693, 700–701, 703–708, 710–714, 716–731, 733–741, 743–799, 885	ISC CHICAGO IL 60290
590–599, 800–816, 820–838, 840–847, 893–895, 897–898, 937–961, 970–986, 988–999	ISC SAN FRANCISCO CA 94013
850–853, 855–857, 859–860, 863–865, 870–875, 877–884, 889–891, 900–908, 910–928, 930–936	ISC LOS ANGELES CA 900
967–969	P&DC HONOLULU HI 967

293.462 **Mixed Country Sacks (5 Pounds or More — ISC Drop Shipment Only)**

The following standards apply:

a. *General.* When mail is prepared under the ISC drop shipment option, direct country bundles destined to a specific country that cannot be made up in direct country sacks must be prepared in a mixed country sack. A mixed country sack must be prepared for each price group. Only countries in price groups 11 through 15 are eligible for this price. The maximum weight of the sack and the contents must not exceed 66 pounds.

b. *Mixed Country Sack Tags.* The mailer must affix PS Tag 155*, Surface Airlift Mail,* to mixed country sacks. PS Tag 155 identifies the mail to ensure it receives priority handling. The mailer must specify only the price group on the back of PS Tag 155.

293.463 Worldwide Nonpresort Mail Sacks

The following standards apply:

a. *General.* The working bundles of mixed country mail and loose items must be enclosed in sacks unless other equipment is specified by the acceptance office. Nonpresorted letter-size mail may be presented in trays if authorized by the acceptance office. The maximum weight of the sack and the contents must not exceed 66 pounds.

Note: Working bundles of mixed country mail cannot be enclosed in mixed country sacks.

b. *Worldwide Nonpresort Sack Tags.* Sack tags for worldwide nonpresort sacks must be labeled with PS Tag 155*, Surface Airlift Mail,* which identifies the mail to ensure it receives priority handling. The mailer must specify “WW" (for “worldwide”) on the back of PS Tag 155.

c. *Worldwide Nonpresort Sack Label*. Mailers who claim the ISC drop shipment price and enter their mail at an authorized drop shipment location under 293.532 are not required to prepare sack labels. Mailers who claim the full-service price must complete sack labels as follows (see Exhibit 293.461 for the list of U.S. Exchange Offices):

Line 1: Appropriate U.S. Exchange Office and Routing Code
Line 2: Contents WKG
Line 3: Mailer, Mailer Location

Example:

ISC MIAMI FL	33112
ISAL — WKG	
ABC COMPANY MIAMI FL	

293.47 Canadian Sack Labeling Information

Mailers preparing direct country sack labels for Canada under 293.461c must use the labeling information as defined in Exhibit 293.47.

Exhibit 293.47
Canadian Mail Sack Labeling Information (Full-service Only)

ZIP Code of Entry Post Office *	Canadian Destination	U.S. Exchange Office Code	U.S. Exchange Office (or ISC)	Optional Destination Code for Barcoded Containers
005, 010–089, 100–212, 214–268, 270–297, 400–418, 420–427, 470–471, 476–477	MONTREAL QC FWD	003	JFK	YMQ
006–009, 298–339, 341–342, 344, 346–347, 349–352, 354–399, 723	MONTREAL QC FWD	33112	MIA	YMQ
430–469, 472–475, 478–516, 520–528, 530–532, 534–535, 537–551, 553–567, 570–577, 580–588, 600–620, 622–631, 633–641, 644–658, 660–662, 664–681, 683–693, 700–701, 703–708, 710–714, 716–722, 724–731, 733–741, 743–816, 822–831, 840–847, 870–875, 877–885, 893, 897–898	TORONTO ON FWD	60290	ORD	YTO
590–599, 820–821, 832–838, 894–895, 937–961, 970–986, 988–999	VANCOUVER BC FWD	94013	SFO	YVR
850–853, 855–857, 859–860, 863–865, 889–891, 900–908, 910–928, 930–936	VANCOUVER BC FWD	90899	LAX	YVR
967–969	VANCOUVER BC FWD	96820	HNL	YVR

* *The "ZIP Code of Entry Post Office" column is relevant only for mailings claimed at the full-service price (i.e., not drop shipped at an ISC) to determine their Canadian destination and U.S. exchange office code container information.*

293.5 Mail Entry and Deposit

293.51 Separation by Price Group

The mailer must specify the price group on the back of PS Tag 155 (for example, with "1" for Canada or "WW" for worldwide nonpresort) and must physically separate the sacks by price group at the time of mailing.

293.52 Full Service

Mailings must be deposited at a Post Office facility where bulk mail is accepted and where the mailer holds an advance deposit account or postage meter license.

293.53 Drop Shipment

293.531 General

To qualify for the drop shipment price, mailers must present the mail to one of the locations in 293.532. The mailer must pay postage at the drop shipment location either through an advance deposit account or postage meter license at the serving Post Office facility. As an alternative, mailers who are participating in the plant-verified drop shipment (PVDS) program may have the mail verified, accepted, and paid for at the mailer's plant or at the origin Post Office facility serving the mailer's plant if authorized under DMM 705. PVDS mail must be transported by the mailer to the drop shipment location, and the mail must be accompanied by PS Form 8125, *Plant-Verified Drop Shipment (PVDS) Verification and Clearance.*

293.532 **Drop Shipment Locations**

Drop shipments are available through the offices noted in Exhibit 293.532.

Note: California, Illinois, and New York locations accept both "cleared" mail (mail that has been previously presented and paid for at a BMEU) and "uncleared" mail (mail that has not been previously presented and paid for at a BMEU). For Florida locations, refer to footnotes 1 and 2 for special requirements.

Exhibit 293.532
ISAL Drop Shipment Locations

State	Facility
California	LOS ANGELES ISC US POSTAL SERVICE 5800 W CENTURY BLVD LOS ANGELES CA 90009-9998 SAN FRANCISCO ISC US POSTAL SERVICE 660 W FIELD RD SAN FRANCISCO CA 94128-3161
Florida	MIAMI ISC [1] US POSTAL SERVICE 11698 NW 25TH ST MIAMI FL 33112-9997 MIAMI PROCESSING AND DISTRIBUTION CTR [2] US POSTAL SERVICE 2200 NW 72ND AVE MIAMI FL 33152-9997
Illinois	JT WEEKER ISC US POSTAL SERVICE 11600 W IRVING PARK RD CHICAGO IL 60666-9998
New York	JOHN F KENNEDY AIRPORT MAIL CTR US POSTAL SERVICE JOHN F KENNEDY INTERNATIONAL AIRPORT BLDG 250 JAMAICA NY 11430-9998

1. *This facility accepts cleared ISAL mail only.*
2. *This facility accepts cleared and uncleared ISAL mail.*

Note: For drop shipment locations of IPA mail, refer to 292.532.

294 (Reserved)

295 (Reserved)

296 (Reserved)

297 Customized Agreements

297.1 Description

The Postal Service provides Global Expedited Package Services (GEPS) customized agreements to Express Mail International and Priority Mail International customers pursuant to the terms and conditions stipulated between the Postal Service and a particular customer.

297.2 Qualifying Mailers

To qualify for a GEPS contract, a mailer must be capable, on an annualized basis, of either tendering at least 2,500 pieces of international mail to the Postal Service, or paying at least $50,000 in international postage to the Postal Service.

297.3 Criteria

Each GEPS customized agreement for international mailings must set forth the following:

a. The type of mail to be tendered by the mailer.

b. The term of the agreement.

c. Weight and size limits.

d. Preparation requirements.

e. Makeup requirements.

f. The services to be provided by the Postal Service.

g. Minimum volume or postage commitment on the part of the mailer.

h. Postage and method of payment.

i. The location at which the mailer is required to tender its items to the Postal Service.

j. Any other obligations of either party.

This page intentionally left blank

3 Extra Services

310 Certificate of Mailing

311 Description

Certificates of mailing furnish evidence of mailing only. A receipt is not obtained on delivery of the mail to the addressee. The fee paid for certificates of mailing does not insure the item against loss or damage.

312 Availability

312.1 At Time of Purchase

Customers may purchase a certificate of mailing when sending the following:

a. Postcards.

b. Unregistered First-Class Mail International items.

c. Free matter for the blind.

d. Unregistered Priority Mail International Flat Rate Envelopes or Small Flat Rate Priced Boxes.

e. Ordinary (uninsured) Priority Mail International parcels including Medium and Large Flat Rate Boxes.

f. Airmail M-bags.

312.2 After Mailing (Additional Criteria)

To obtain an additional certificate after mailing, the mailer must present the original certificate and an additional certificate endorsed “Duplicate” or a copy showing the original dates of mailing. The additional certificate must be postmarked to show the current date. A certificate of mailing cannot be obtained in combination with Registered Mail items, insured parcels, or bulk mailings of 200 pieces or more that bear a permit imprint.

313 Fees

313.1 Individual Pieces

In addition to the correct postage, the mailer must pay the certificate of mailing fee for each article on PS Form 3817, *Certificate of Mailing*. For each duplicate copy of PS Form 3817 requested after mailing (see 312.2), the mailer must pay a separate fee. See Notice 123, *Price List*.

313.2 Three or More Pieces

To receive a reduced fee when mailing three or more pieces, the mailer may optionally use PS Form 3877, *Firm Mailing Book for Accountable Mail*. The mailer must pay the certificate of mailing fee with a permit imprint or by affixing ordinary stamps, precanceled stamps, or metered stamps to PS Form 3877. For a separate fee, the mailer may request a duplicate copy of PS Form 3877 after mailing (see 312.2). See Notice 123, *Price List*, for all applicable fees.

The mailer must make all entries on firm sheets by typewriter, ink, or ballpoint pen. The mailer may also use computer-generated firm sheets that contain the same information as PS Form 3877. The mailer must obliterate all unused portions of the addressee column by drawing a diagonal line through them. The mailer and accepting employee must initial any alterations to the firm sheets. The sheets of the books become the sender's receipts.

313.3 Bulk Pieces

For bulk mailings paid with ordinary stamps or meter stamps, the mailer may optionally use PS Form 3606, *Certificate of Bulk Mailing* — however, the mailer cannot use PS Form 3606 for a bulk mailing paid with a permit imprint. The mailer must affix stamps or meter stamps to the form to pay the bulk certificate of mailing fees. See Notice 123, *Price List*.

PS Form 3606 is provided only for a mailing of identical pieces under 312.1. It only verifies the total number of articles mailed, and it must not be used as an itemized list.

314 Processing Requests

314.1 Forms

314.11 Postal Service Forms

The forms used for domestic mail are also used for international mail (see DMM 503).

314.12 Treasury Department Forms

a. The sender may receive a certificate of mailing on Treasury Department (Internal Revenue) Forms P.T. 26, 27-A, or 550 certifying that the sender has waived the right to withdraw the item from the mail. The certificate of mailing fees apply to these forms.

b. Post Office facilities may also certify on Customs Form 4455, *Certificate of Registration,* the exportation by mail of items sent abroad for alteration, repair, or replacement (see 713.43). The certificate of mailing fees apply to each completed form.

314.13 Agriculture Department Forms

Certain certificates or permits are required for the exportation of dried whole eggs. For procedures and fees, see 550.

314.2 Preparation

314.21 Sender's Responsibility

Sender must:

a. Prepare certificate as prescribed in DMM 503.

b. Use a typewriter ink or ballpoint pen.

c. Affix postage stamps or postage meter stamps *to the certificate* to cover fees or purchase a postage validation imprinter (PVI) label to be affixed by the accepting clerk.

d. If certificate is an additional one for the same item endorse it "DUPLICATE" or "COPY."

e. Return certificate to the accepting clerk.

314.22 Accepting Clerk's Responsibility

Accepting clerk must:

a. Make sure that the form has been properly completed and that the correct amount of postage has been affixed.

b. Cancel the stamps with a postmark showing the current date.

c. Sign the Treasury Department forms described in 314.12.

Note: This is the only instance in which certification requires signatures or initials of Postal Service employees.

d. Return the form to the sender.

320 Insurance

321 Global Express Guaranteed Insurance

321.1 Description

Insurance is provided for lost or damaged Global Express Guaranteed shipments up to $100 unless additional insurance is purchased. The insurance limit varies by country (see the Individual Country Listings) but may never exceed $2,499. Unless additional insurance is purchased, liability for a lost or damaged Global Express Guaranteed shipment is limited to the lowest of the following:

a. $100.

b. The actual amount of the loss or damage.

c. The actual value of the contents.

321.2 Availability

Insurance availability varies by country, content, and value. Coverage, terms, and limitations are subject to change. See the Individual Country Listings for insurance limits.

321.3 Additional Coverage and Fees

Additional insurance coverage above $100 — up to the maximum amount allowed by the country (see the Individual Country Listings) but never to exceed $2,499 — may be purchased at the sender's option. The insurance fee is in addition to postage and other applicable fees. See Notice 123, *Price List*, for the fee schedule for optional Global Express Guaranteed document reconstruction insurance or non-document insurance coverage.

322 Express Mail International Insurance

322.1 Description

Express Mail International shipments containing merchandise or nonnegotiable documents are insured against loss, damage, or missing contents up to $100 at no additional charge. Indemnity is paid by the U.S. Postal Service as provided in 935 and in DMM 503 and 609.

322.2 Availability

Insurance availability varies by country, content, and value. See the Individual Country Listings for availability and insurance limits.

322.3 Additional Coverage and Fees

Additional merchandise insurance coverage above $100 — up to the maximum amount allowed by the country (see the Individual Country Listings) but never to exceed $5,000 — may be purchased at the sender's option. See the Individual Country Listings for merchandise insurance limits. The insurance fee is in addition to postage and other applicable fees. See Notice 123, *Price List*, for the fee schedule for optional Express Mail International merchandise insurance coverage.

322.4 Return Receipt Service

Return receipt service is the only extra service that mailers may add to insured items. There is no additional charge for this service, and it is available only to certain countries. See the Individual Country Listings for availability. See 340 for additional information about return receipt service.

323 Priority Mail International Insurance

323.1 Description

For a fee, the sender may purchase insurance to protect against loss, damage, or missing contents for Priority Mail International parcels containing merchandise. Insurance may not be purchased for Priority Mail International Flat Rate Envelopes or Small Flat Rate Priced Boxes. Compensation varies according to the fee paid. For parcels delivered to the addressee in damaged condition or with missing contents, payment is made to the addressee unless the addressee waives payment, in writing, in favor of the sender.

323.2 Availability

Insurance is available only for Priority Mail International parcels and only to certain countries. See Individual Country Listings. Insurance is not available the Priority Mail International Flat Rate Envelopes or Small Flat Rate Priced Boxes.

323.3 Coverage and Fees

Merchandise insurance coverage — up to the maximum amount allowed by the country (see the Individual Country Listings) but never to exceed $5,000 — may be purchased at the sender's option. See the Individual Country Listings for insurance limits. The insurance fee is in addition to postage and other applicable fees and is based on the insured value. See Notice 123, *Price List*, for the fee schedule for optional Priority Mail International parcel insurance coverage.

323.4 Return Receipt

Return receipt service is the only extra service that mailers may add to insured items. It is available for an additional fee and is available only to certain countries. See the Individual Country Listings for availability. See 340 for additional information about return receipt service.

323.5 Insured Value and Indemnity Claims

323.51 Insured Value and Declared Value

The insured value (insurance coverage) of a parcel may not be more than the declared value of the contents. However, the insured value may be less than the declared value depending on the wish of the sender.

323.52 Indemnity Claims and Payments

As proof of mailing and proof of insurance to file a claim, the sender must submit the following:

a. The original mailing receipt.

b. The sender's copy of PS Form 2976-A, *Customs Declaration and Dispatch Note — CP 72*.

For more information on indemnity claims and payments, see chapter 9.

323.6 Preparation of Insured Priority Mail International Parcels

323.61 Mailing Receipt and Insurance Number

All Priority Mail International insured parcels must be numbered. PS Form 2976-A, *Customs Declaration and Dispatch Note — CP 72*, and the mailing receipt issued at the time of mailing will serve as proof of mailing and proof of insurance. Volume mailers may use PS Form 3877, *Firm Mailing Book for Accountable Mail*, as the sender's receipt.

323.62 Accepting Clerk's Responsibility

The accepting clerk must do the following:

a. Indicate on PS Form 2976-A the amount for which the parcel is insured. Write the amount in U.S. dollars in ink in the "Insured Amount (U.S.) block."

b. Convert the U.S. dollar amount to the special drawing right (SDR) value and enter it in the SDR value block. For example:

INSURED VALUE
$100.00 (U.S.)
63.39 SDR

c. See Exhibit 323.62 for a table showing the conversion of U.S. dollar values up to $600 to SDR equivalents. To determine SDR equivalents above $600, multiply the insured amount, rounded up to the next full dollar, by the conversion factor of 0.6339.

Note: Use the following rates when converting between U.S. dollars and SDR values:

1 U.S. $ = 0.6339 SDR
1 SDR = $1.58 ($1.5776 U.S.)

d. Write a bold capital "V" in the space provided adjacent to the boxes for Insured Amount and Insurance Fees as an indicator that additional insurance was purchased.

e. Indicate special contents for fragile, liquid, and perishable items.

f. Round stamp PS Form 2976-A in the appropriate place on each copy.

Exhibit 323.62 (p. 1)

Conversion Table: U.S. Dollars to Special Drawing Right (SDR)

1 U.S. $ = 0.6339 SDR 1 SDR = $1.58 ($1.5776 U.S.)

US $	SDR	US $	SDR	US $	SDR	US $	SDR	US $	SDR	US $	SDR
1	0.6339	51	32.3289	101	64.0239	151	95.7189	201	127.4139	251	159.1089
2	1.2678	52	32.9628	102	64.6578	152	96.3528	202	128.0478	252	159.7428
3	1.9017	53	33.5967	103	65.2917	153	96.9867	203	128.6817	253	160.3767
4	2.5356	54	34.2306	104	65.9256	154	97.6206	204	129.3156	254	161.0106
5	3.1695	55	34.8645	105	66.5595	155	98.2545	205	129.9495	255	161.6445
6	3.8034	56	35.4984	106	67.1934	156	98.8884	206	130.5834	256	162.2784
7	4.4373	57	36.1323	107	67.8273	157	99.5223	207	131.2173	257	162.9123
8	5.0712	58	36.7662	108	68.4612	158	100.1562	208	131.8512	258	163.5462
9	5.7051	59	37.4001	109	69.0951	159	100.7901	209	132.4851	259	164.1801
10	6.3390	60	38.0340	110	69.7290	160	101.4240	210	133.1190	260	164.8140
11	6.9729	61	38.6679	111	70.3629	161	102.0579	211	133.7529	261	165.4479
12	7.6068	62	39.3018	112	70.9968	162	102.6918	212	134.3868	262	166.0818
13	8.2407	63	39.9357	113	71.6307	163	103.3257	213	135.0207	263	166.7157
14	8.8746	64	40.5696	114	72.2646	164	103.9596	214	135.6546	264	167.3496
15	9.5085	65	41.2035	115	72.8985	165	104.5935	215	136.2885	265	167.9835
16	10.1424	66	41.8374	116	73.5324	166	105.2274	216	136.9224	266	168.6174
17	10.7763	67	42.4713	117	74.1663	167	105.8613	217	137.5563	267	169.2513
18	11.4102	68	43.1052	118	74.8002	168	106.4952	218	138.1902	268	169.8852
19	12.0441	69	43.7391	119	75.4341	169	107.1291	219	138.8241	269	170.5191
20	12.6780	70	44.3730	120	76.0680	170	107.7630	220	139.4580	270	171.1530
21	13.3119	71	45.0069	121	76.7019	171	108.3969	221	140.0919	271	171.7869
22	13.9458	72	45.6408	122	77.3358	172	109.0308	222	140.7258	272	172.4208
23	14.5797	73	46.2747	123	77.9697	173	109.6647	223	141.3597	273	173.0547
24	15.2136	74	46.9086	124	78.6036	174	110.2986	224	141.9936	274	173.6886
25	15.8475	75	47.5425	125	79.2375	175	110.9325	225	142.6275	275	174.3225
26	16.4814	76	48.1764	126	79.8714	176	111.5664	226	143.2614	276	174.9564
27	17.1153	77	48.8103	127	80.5053	177	112.2003	227	143.8953	277	175.5903
28	17.7492	78	49.4442	128	81.1392	178	112.8342	228	144.5292	278	176.2242
29	18.3831	79	50.0781	129	81.7731	179	113.4681	229	145.1631	279	176.8581
30	19.0170	80	50.7120	130	82.4070	180	114.1020	230	145.7970	280	177.4920
31	19.6509	81	51.3459	131	83.0409	181	114.7359	231	146.4309	281	178.1259
32	20.2848	82	51.9798	132	83.6748	182	115.3698	232	147.0648	282	178.7598
33	20.9187	83	52.6137	133	84.3087	183	116.0037	233	147.6987	283	179.3937
34	21.5526	84	53.2476	134	84.9426	184	116.6376	234	148.3326	284	180.0276
35	22.1865	85	53.8815	135	85.5765	185	117.2715	235	148.9665	285	180.6615
36	22.8204	86	54.5154	136	86.2104	186	117.9054	236	149.6004	286	181.2954
37	23.4543	87	55.1493	137	86.8443	187	118.5393	237	150.2343	287	181.9293
38	24.0882	88	55.7832	138	87.4782	188	119.1732	238	150.8682	288	182.5632
39	24.7221	89	56.4171	139	88.1121	189	119.8071	239	151.5021	289	183.1971
40	25.3560	90	57.0510	140	88.7460	190	120.4410	240	152.1360	290	183.8310
41	25.9899	91	57.6849	141	89.3799	191	121.0749	241	152.7699	291	184.4649
42	26.6238	92	58.3188	142	90.0138	192	121.7088	242	153.4038	292	185.0988
43	27.2577	93	58.9527	143	90.6477	193	122.3427	243	154.0377	293	185.7327
44	27.8916	94	59.5866	144	91.2816	194	122.9766	244	154.6716	294	186.3666
45	28.5255	95	60.2205	145	91.9155	195	123.6105	245	155.3055	295	187.0005
46	29.1594	96	60.8544	146	92.5494	196	124.2444	246	155.9394	296	187.6344
47	29.7933	97	61.4883	147	93.1833	197	124.8783	247	156.5733	297	188.2683
48	30.4272	98	62.1222	148	93.8172	198	125.5122	248	157.2072	298	188.9022
49	31.0611	99	62.7561	149	94.4511	199	126.1461	249	157.8411	299	189.5361
50	31.6950	100	63.3900	150	95.0850	200	126.7800	250	158.4750	300	190.1700

Exhibit 323.62 (p. 2)

Conversion Table: U.S. Dollars to Special Drawing Right (SDR)

1 U.S. $ = 0.6339 SDR 1 SDR = $1.58 ($1.5776 U.S.)

US $	SDR	US $	SDR	US $	SDR	US $	SDR	US $	SDR	US $	SDR
301	190.8039	351	222.4989	401	254.1939	451	285.8889	501	317.5839	551	349.2789
302	191.4378	352	223.1328	402	254.8278	452	286.5228	502	318.2178	552	349.9128
303	192.0717	353	223.7667	403	255.4617	453	287.1567	503	318.8517	553	350.5467
304	192.7056	354	224.4006	404	256.0956	454	287.7906	504	319.4856	554	351.1806
305	193.3395	355	225.0345	405	256.7295	455	288.4245	505	320.1195	555	351.8145
306	193.9734	356	225.6684	406	257.3634	456	289.0584	506	320.7534	556	352.4484
307	194.6073	357	226.3023	407	257.9973	457	289.6923	507	321.3873	557	353.0823
308	195.2412	358	226.9362	408	258.6312	458	290.3262	508	322.0212	558	353.7162
309	195.8751	359	227.5701	409	259.2651	459	290.9601	509	322.6551	559	354.3501
310	196.5090	360	228.2040	410	259.8990	460	291.5940	510	323.2890	560	354.9840
311	197.1429	361	228.8379	411	260.5329	461	292.2279	511	323.9229	561	355.6179
312	197.7768	362	229.4718	412	261.1668	462	292.8618	512	324.5568	562	356.2518
313	198.4107	363	230.1057	413	261.8007	463	293.4957	513	325.1907	563	356.8857
314	199.0446	364	230.7396	414	262.4346	464	294.1296	514	325.8246	564	357.5196
315	199.6785	365	231.3735	415	263.0685	465	294.7635	515	326.4585	565	358.1535
316	200.3124	366	232.0074	416	263.7024	466	295.3974	516	327.0924	566	358.7874
317	200.9463	367	232.6413	417	264.3363	467	296.0313	517	327.7263	567	359.4213
318	201.5802	368	233.2752	418	264.9702	468	296.6652	518	328.3602	568	360.0552
319	202.2141	369	233.9091	419	265.6041	469	297.2991	519	328.9941	569	360.6891
320	202.8480	370	234.5430	420	266.2380	470	297.9330	520	329.6280	570	361.3230
321	203.4819	371	235.1769	421	266.8719	471	298.5669	521	330.2619	571	361.9569
322	204.1158	372	235.8108	422	267.5058	472	299.2008	522	330.8958	572	362.5908
323	204.7497	373	236.4447	423	268.1397	473	299.8347	523	331.5297	573	363.2247
324	205.3836	374	237.0786	424	268.7736	474	300.4686	524	332.1636	574	363.8586
325	206.0175	375	237.7125	425	269.4075	475	301.1025	525	332.7975	575	364.4925
326	206.6514	376	238.3464	426	270.0414	476	301.7364	526	333.4314	576	365.1264
327	207.2853	377	238.9803	427	270.6753	477	302.3703	527	334.0653	577	365.7603
328	207.9192	378	239.6142	428	271.3092	478	303.0042	528	334.6992	578	366.3942
329	208.5531	379	240.2481	429	271.9431	479	303.6381	529	335.3331	579	367.0281
330	209.1870	380	240.8820	430	272.5770	480	304.2720	530	335.9670	580	367.6620
331	209.8209	381	241.5159	431	273.2109	481	304.9059	531	336.6009	581	368.2959
332	210.4548	382	242.1498	432	273.8448	482	305.5398	532	337.2348	582	368.9298
333	211.0887	383	242.7837	433	274.4787	483	306.1737	533	337.8687	583	369.5637
334	211.7226	384	243.4176	434	275.1126	484	306.8076	534	338.5026	584	370.1976
335	212.3565	385	244.0515	435	275.7465	485	307.4415	535	339.1365	585	370.8315
336	212.9904	386	244.6854	436	276.3804	486	308.0754	536	339.7704	586	371.4654
337	213.6243	387	245.3193	437	277.0143	487	308.7093	537	340.4043	587	372.0993
338	214.2582	388	245.9532	438	277.6482	488	309.3432	538	341.0382	588	372.7332
339	214.8921	389	246.5871	439	278.2821	489	309.9771	539	341.6721	589	373.3671
340	215.5260	390	247.2210	440	278.9160	490	310.6110	540	342.3060	590	374.0010
341	216.1599	391	247.8549	441	279.5499	491	311.2449	541	342.9399	591	374.6349
342	216.7938	392	248.4888	442	280.1838	492	311.8788	542	343.5738	592	375.2688
343	217.4277	393	249.1227	443	280.8177	493	312.5127	543	344.2077	593	375.9027
344	218.0616	394	249.7566	444	281.4516	494	313.1466	544	344.8416	594	376.5366
345	218.6955	395	250.3905	445	282.0855	495	313.7805	545	345.4755	595	377.1705
346	219.3294	396	251.0244	446	282.7194	496	314.4144	546	346.1094	596	377.8044
347	219.9633	397	251.6583	447	283.3533	497	315.0483	547	346.7433	597	378.4383
348	220.5972	398	252.2922	448	283.9872	498	315.6822	548	347.3772	598	379.0722
349	221.2311	399	252.9261	449	284.6211	499	316.3161	549	348.0111	599	379.7061
350	221.8650	400	253.5600	450	285.2550	500	316.9500	550	348.6450	600	380.3400

323.63 Postmarking

Postmark the item at the time of acceptance at all breaks (including any cut or torn edges) of any tape or tabs used in sealing the parcel.

323.7 Sender's Responsibility

323.71 Mailing Receipt

The sender should enter the name and address of the addressee on the mailing receipt and retain the receipt. The sender must submit the receipt to make an inquiry about or file a claim for an insured parcel (see chapter 9).

323.72 Marking

The sender has the responsibility to do the following:

a. Mark parcels containing fragile or perishable articles with the appropriate endorsement — e.g., "FRAGILE," "PERISHABLE," "GLASS," etc.

b. Enter the insured amount in U.S. currency (figures only) in the appropriate space on the customs declaration.

323.73 Sealing

The sender must seal all insured parcels.

330 Registered Mail

331 Description

Customers may use Registered Mail service for additional protection and security in dispatch and conveyance in the United States. For each registered item a mailing receipt is issued by the office of mailing and a record of delivery is maintained at the office of destination. Indemnity limits are much lower for Registered Mail items than for insured mail. In the United States, Registered Mail items are handled separately from all other mail and are kept in a secure area with restricted access. In destination countries, Registered Mail items are handled according to their own internal procedures.

332 Availability

Customers may purchase Registered Mail service for items that weigh up to 4 pounds. Registered Mail service is not available with Global Express Guaranteed, Express Mail International, or Priority Mail International parcels or any type of M-bag service. See Individual Country Listings for additional country-specific prohibitions and restrictions. Registered Mail service is available for the following types of mail:

a. Flat Rate Envelopes listed in 232.2, including free matter for the blind items.

b. Small Flat Rate Priced Boxes listed in 232.2, including free matter for the blind items.

c. First-Class Mail International items, including free matter for the blind items.

333 Fees and Indemnity Limits

333.1 Registration Fees

See Notice 123, *Price List*, for the registry fee.

333.2 Indemnity Limit

Regardless of the declared value of a registered item, the maximum amount of indemnity payable for loss, damage, or missing contents is $47.33.

334 Processing Requests

334.1 Mailing Receipt and Registration Number

334.11 General Use

A receipt is issued for a Registered Mail item when it is accepted. For individual transactions PS Form 3806, *Receipt for Registered Mail*, is used. When an average of three or more items are presented for registration at one time PS Form 3877, *Firm Mailing Book for Accountable Mail*, may be used (see DMM 503). The registered number is determined by Label 200 *Registered Mail* a preprinted self-adhesive label with a number series of nine digits preceded by a Service Type Code of two alpha characters and followed by the Country Code of two alpha characters "US." Only labels printed by the Postal Service may be used on international Registered Mail items.

334.12 Sender's Responsibility

The sender must:

a. Enter the name and address of addressee on the mailing receipt before presenting the item for registration.

b. Declare the full value of mail presented for registration. The value declared must be identical to the value stated on PS Form 2976, *Customs Declaration CN 22 — Sender's Declaration*. Items on which identical values are not declared will be refused. (See 123.711.)

c. The sender should retain the receipt and must submit it if he or she wishes to file a claim for the registered item (see chapter 9).

334.13 Accepting Clerk's Responsibility

The accepting clerk must:

a. Verify that the value declared on PS Form 3806 and the value declared on PS Form 2976 are identical. Refuse items on which the declared values are not the same.

b. Affix Label 200, *Registered Mail,* to the item on the address side — in the upper left, below the return address — and enter the number in ink on the mailing receipt.

c. If requested by the sender, show on the mailing receipt and on the Post Office record the time the item was accepted for mailing.

d. Enter the registration fee and postage plus the return receipt and the restricted delivery fee if applicable on the receipt.

e. Endorse mailing receipt “OFFICIAL PAID” or “OFF. PD.” when federal government official mail is registered pursuant to 142.1.

334.14 Preparation

Items bearing an address in pencil or any other erasable format must not be accepted for Registered Mail service.

334.2 Marking

The accepting clerk must enter the following endorsements and special markings on each registered item:

a. Affix Label 200 as noted in 334.13b. All Registered Mail items of U.S. origin must bear a Label 200.

b. Place airmail Label 19-A or Label 19-B or the words “PAR AVION” on registered items prepaid for air if the sender has failed to do this.

c. Endorse the item for any other extra service that the sender requests.

334.3 Postmarking

334.31 Placement

Postmark registered items twice on the back on the crossing of the upper and lower flaps. If return receipts are used, postmark partially on the receipt and partially on the flaps of the letter. Items sealed on the address side must be postmarked on the address side.

334.32 Registered Matter for the Blind

Postmark registered matter for the blind on the address side.

334.4 Sealing

334.41 Sender’s Responsibility

Senders must securely seal all items presented for registration. Wax or paper seals on envelopes must bear a distinctive mark of the sender and must be affixed in such a way as to allow sufficient space at the intersections of the flaps for postmarking. Self-sealing envelopes and items that appear to have been opened and resealed may not be registered.

334.42 Registered Free Matter for the Blind or Other Physically Handicapped Persons

Registered matter for the blind or other physically handicapped persons must *not* be sealed.

334.5 Return Receipt and Restricted Delivery

Return receipts and restricted delivery can be purchased for registered items to most countries. (See 340 and 350 and Individual Country Listings.)

335 Indemnity Claims and Payments

The sender must submit a mailing receipt to make an inquiry or file a claim (see chapter 9). Indemnity is provided for loss, damage, or missing contents. If a registered article has been delivered to the addressee payment for damage and missing contents is paid to the addressee unless the addressee waives payment in writing in favor of the sender.

340 Return Receipt

341 Description

PS Form 2865, *Return Receipt for International Mail* (Avis de Reception), is a pink card that is attached to a registered item or a Priority Mail International insured parcel at the time of mailing and that is removed and signed at the point of delivery and returned to the sender. Return receipt service provides the sender with evidence of delivery. Return receipts are completed in the country of destination in accordance with its internal regulations, which may not require the addressee's signature except under special circumstances. These receipts are returned to the sender by airmail.

342 Availability

Return receipts can be purchased only at the time of mailing and are available only for a registered item or a Priority Mail International insured parcel. Some countries do not admit return receipts or restrict them to Registered Mail items. See Individual Country Listings.

343 Fee

See Notice 123, *Price List*, for the return receipt fee. This fee must be paid in addition to postage and other applicable charges. Return receipt service is available at no charge for Express Mail International to certain countries.

Note: Include the weight of the return receipt when determining the postage for mailing the item.

344 Processing Requests

344.1 Form

344.11 Sender's Responsibility

The sender must enter the return address on the return receipt.

344.12 Accepting Clerk's Responsibility

The accepting clerk must:

a. Record the return receipt fee on the insured or registered mailing receipt.

b. Enter the address of the addressee on the return receipt.

c. Attach the return receipt to the item.

d. Affix and cancel postage equal to the sum of the return receipt fee, postage, and other applicable fees.

344.2 Marking

The accepting clerk must mark address side of item either “AVIS DE RECEPTION” or “A.”

344.3 Return Receipt Improperly Completed or Not Received

If the sender does not receive a return receipt for which a fee was paid, or if the sender receives an improperly completed return receipt, an inquiry may be filed. (See 920 for inquiry procedures.)

350 Restricted Delivery

351 Description

351.1 General

Restricted delivery is a service that generally limits who may receive an item. It is limited to First-Class Mail International items (including Priority Mail International Flat Rate Envelopes and Small Flat Rate Priced Boxes) using Registered Mail service. The details of the service, however, are governed by the internal legislation of the destination country. Some countries will deliver only to the addressee in person and will obtain that person’s signature on the receipt. Other countries may permit delivery to agents of the addressee and/or may require only the signature of a postal official on the return receipt.

351.2 Undeliverable Mail

If the country of destination is unable to deliver the item in accordance with its regulations it will be returned as undeliverable.

352 Availability

Restricted delivery is available *only:*

a. At time of mailing.

b. For registered items.

c. If accompanied by a return receipt (see 340).

d. To certain countries. See Individual Country Listings.

353 Fee

See Notice 123, *Price List*, for the restricted delivery fee.

354 Processing Requests

354.1 Marking

The sender must endorse item “A REMETTRE EN MAIN PROPRE” or the equivalent in a language known in the destination country. Endorsement should be located on the address side below the return address.

354.2 Postage

The accepting clerk must affix and cancel postage equal to the sum of the restricted delivery fee, regular postage, and other fees.

360 (Reserved)

370 International Money Transfer Services

371 International Money Orders

371.1 Description

371.11 General

International postal money order service is available to transfer funds to individuals or firms in countries that have entered into agreements with the United States Postal Service for the exchange of postal money orders. International postal money orders may be sent by First-Class Mail International or Express Mail International service.

371.12 Maximum Amount

The maximum amount for a single international postal money order is $700 unless noted otherwise in parentheses in Exhibit 371.2.

There is no limit on the number of money orders that may be sent to a payee during any time period. There is a limit on the total face value of money orders an individual customer may purchase on any one day (see DMM 503.14).

371.2 Availability

International postal money orders are exchanged with countries using the pink International Postal Money Order (Form MP1). Exhibit 371.2 lists the countries that accept this form. The maximum amount for a single postal money order is $700 unless noted otherwise in parentheses in Exhibit 371.2.

Exhibit 371.2
Countries Accepting the International Postal Money Order Form (MP1)

Albania	Dominican Republic [2]	Mexico [2]
Anguilla	Ecuador [2]	Montserrat
Antigua and Barbuda	El Salvador ($500)	Peru
Bahamas	Grenada	Saint Christopher and Nevis
Barbados [1]	Guinea [2]	Saint Lucia
Belize	Guyana ($500)	Saint Vincent and the Grenadines
Bolivia [2]	Honduras [2]	Sierra Leone [2]
British Virgin Islands	Jamaica [3]	Trinidad and Tobago [3]
Canada	Japan [4]	
Cape Verde [2]	Mali [2]	
Dominica		

(1) In Barbados the amount of the money due for payment will no longer be handwritten on Form MP1 (the form currently states "Amount To Be Written In Words") but will be electronically applied.

(2) Bolivia, Cape Verde, Dominican Republic, Ecuador, Guinea, Honduras, Mali, Mexico, and Sierra Leone will not issue money orders for payment in the United States.

(3) Jamaica and Trinidad and Tobago will not issue money orders in U.S. dollars.

(4) In Japan the Form TFP1 money orders issued for payment in the United States must be shown in U.S. dollars preceded by the capital letters "USD."

371.3 Fees

See Notice 123, *Price List*, for the money order fee for countries that accept Form MP1.

371.4 Processing Requirements

371.41 Form Required — International Postal Money Order (Form MP1)

Use the pink International Postal Money Order (Form MP1) for money orders payable to the countries listed in Exhibit 371.2. Follow the issuance procedures in DMM 503.14.

Note: For money orders payable in Canada the amount of the money order must be expressed in U.S. currency only. Issuing clerks must use the money order imprinter in the usual manner printing the amount received in U.S. currency.

371.42 Preparation by Purchaser

When Form MP1 is used to send funds the purchaser should complete the information requested on both the money order and the customer's receipt. Follow the instructions for preparing domestic money orders in DMM 503.14 when using Form MP1.The Postal Service is not liable for money orders that are lost before the purchaser completes this information. Money orders may be made payable to the purchaser (either a person or a firm) or a payee by official title (e.g., Director of Publications Canada).

371.43 Preparation by Postal Service Employee

Follow the instructions for preparing domestic money orders in DMM 503.14 when issuing Form MP1.

371.5 Procedures for Cashing Money Orders Issued by Foreign Countries

371.51 Valid Postal Money Orders

Valid postal money orders issued by countries listed in Exhibit 371.2 will be paid in accordance with the procedures for cashing domestic money orders (see DMM 503.14). However no international money order will be paid after the expiration of the validity date on the money order.

371.52 Canadian Money Orders

Canadian money orders may be paid only if they are addressed to a payee within the United States and the amount is imprinted in United States currency.

371.53 Japanese Money Orders

Valid postal money orders issued by Japan on its Form TFP1 are cashed in accordance with DMM 503.14. Money orders must not be paid after the expiration of the validity date indicated on the money order. The amount to be paid is shown in United States dollars and must not have been altered.

371.6 Lost Reissued Money Orders

Report the facts concerning lost reissued money orders (e.g. an international money order sent to the United States by a foreign country and reissued on a domestic form to the payee in the United States) to:

INTERNATIONAL MONEY ORDER SECTION
ACCOUNTING SERVICE CTR
US POSTAL SERVICE
PO BOX 82414
ST LOUIS MO 63182-9421

371.7 Inquiries

371.71 Who May Receive Information

Postal Service employees must not disclose information concerning money order transactions to any person except the purchaser, the payee, the endorsee, or a duly authorized agent of one of these. The Office of Accounting Postal Service Headquarters may authorize other requests only when the request concerns a specific money order or a specific party to a money order transaction and when accompanied by a valid court order. Send requests to:

OFFICE OF ACCOUNTING
US POSTAL SERVICE
475 L'ENFANT PLZ SW
WASHINGTON DC 20260-5240

371.72 Inquiries Regarding Payment

371.721 Money Orders Issued on International Postal Money Order (Form MP1)

Use PS Form 6401, *Money Order Inquiry,* in accordance with DMM 503.14 when filing inquiries or requests for replacement of an International Postal Money Order (Form MP1). Only the purchaser may file and receive payment. Replacement will not be made before 6 months after the date of issuance.

371.722 **Reissued International Money Orders (89 Series)**

Use PS Form 6401, *Money Order Inquiry*, in accordance with DMM 503.14 when filing inquiries or requests for replacement of reissued international postal money orders. The U.S. payee may file and receive payment.

371.723 **Fee for PS Form 6401, Money Order Inquiry**

See Notice 123, *Price List*, for the fee charged for each PS Form 6401, Money Order Inquiry. The fee is not required if PS Form 6401 is filed by a bank, another financial institution, a government agency that processes money orders directly with the Federal Reserve Bank, or a Postal Service official engaged in official USPS business.

372 Sure Money (DineroSeguro)

372.1 Description

Sure Money® (DineroSeguro®) is a service provided at certain Post Office locations for customers to electronically transfer money internationally to individuals or firms in certain Latin American countries. Funds are transferred to participating banks or other approved agents in Latin America, where payees can claim them. Funds are guaranteed to transfer in 15 minutes, and a currency conversion rate is provided to the sender at the time of purchase.

372.2 Options and Restrictions

The following restrictions apply to Sure Money service:

a. The maximum purchase per day is $2,000.

b. Regardless of the amount of money sent, the payee must present a valid photo identification, which must match exactly the name on the transaction, as well as a valid confirmation number that is provided to the sender at the time of purchase.

c. For a fee and with valid photo identification, the sender may change the individual who is designated as the payee.

d. For a fee and with valid photo identification, the sender may request a refund if for any reason payout in the destination country was unsuccessful.

372.3 Fees

Fees for Sure Money service are as follows:

Transaction Type	Minimum Amount	Maximum Amount	Fee
Sales	$0.01	$750.00	$10.00
	$750.01	$1,500.00	$15.00
	$1,500.01	$2,000.00	$20.00
Refunds	$0.01	$2,000.00	$25.00
Change of Payee	$0.01	$2,000.00	$10.00

372.4 Participating Post Offices

Sure Money service is available at 2,800 Post Office locations. To determine the closest participating Post Office location, customers should call 888-368-4669.

372.5 Availability

Participating countries for Sure Money service are as follows:

a. Argentina.

b. Colombia.

c. Dominican Republic.

d. Ecuador.

e. El Salvador.

f. Guatemala.

g. Honduras.

h. Mexico.

i. Nicaragua.

j. Peru.

372.6 Currencies by Country

Local currencies vary by country. Some countries use the U.S. dollar as their payout currency, and in those countries the exchange rate with U.S. currency is always one-to-one. Other countries use their own currency, which has a different foreign currency exchange rate. Senders will receive information specific to their transactions when they purchase Sure Money service.

372.7 Service Guarantee

Upon request, the sender may receive a refund of the sale fee only if the transaction arrives at the payout agent after the 15-minute guarantee period has not been attained. All refunds are subject to the terms and conditions applicable to the service at the time of purchase.

380 Supplemental Services

381 International Reply Coupons

381.1 Description

a. The sender of a letter may prepay a reply by purchasing reply coupons that are sold and exchangeable for postage stamps by postal administrations in member countries of the Universal Postal Union.

b. International reply coupons (in French *Coupons-Reponse Internationaux*) are printed in blue ink on paper that has the letters “UPU” in large characters in the watermark. The front of each coupon is printed in French. The reverse side of the coupon shows the text relating to its use in German, English, Arabic, Chinese, Spanish, and Russian.

c. Coupons sold in the United States have the selling price printed on them while coupons in other countries may not.

381.2 Availability

Reply coupons may be requisitioned by Post Office facilities in the same manner as postage stamps. The coupons should be stocked at Post Office facilities that have a demand for them.

381.3 Selling Price and Exchange Value

a. See Notice 123, *Price List*, for the selling price of a reply coupon in the United States. One coupon is exchangeable in any other member country for a stamp or stamps representing the minimum postage on an unregistered air letter. Unused U.S. coupons (that is, those with the U.S. selling price stamped on them) may be exchanged only for United States postage stamps by the original purchaser at a discount of 1 cent below the purchase price.

b. With the exceptions noted in 381.4d, international reply coupons purchased in foreign countries are exchangeable at U.S. Post Office facilities toward the purchase of postage stamps and embossed stamped envelopes at the current maximum First-Class Mail International 1-ounce, letter-size price, per coupon, irrespective of the country where they were purchased. See Notice 123, *Price List*.

381.4 Processing Requests

a. When an international reply coupon is sold the Postal Service clerk must place a postmark in the block which is headed *control stamp of the country of origin.*

b. Under Universal Postal Union's regulations member countries are *not* required to place a control stamp or postmark on the international reply coupons that they sell. Therefore some foreign issue reply coupons which are tendered for redemption may bear the name of the issuing country (generally in French) rather than the optional control stamp or postmark. Such coupons are exchangeable for U.S. postage as specified in 381.3b.

c. A Post Office facility redeeming an unused U.S. coupon must postmark it in the unpostmarked circle. A Post Office facility exchanging a foreign reply coupon must postmark it in the right circle. Post Office facilities must not accept foreign coupons that already bear a Postal Service postmark.

d. Effective January 1, 2010, the only valid version of the international reply coupons printed by the Universal Postal Union is Item Number 330800, which is approximately 3.75 inches by 6 inches, has a barcode on the reverse side, and has an expiration date of December 31, 2013. This policy is for international reply coupons issued by the United States as well as for those issued by foreign postal administrations.

e. Reply coupons formerly issued by the Postal Union of the Americas and Spain are no longer valid. These coupons are printed in green ink and bear the caption *Cupon Respuesta America-Espanol.* Customers possessing any of these coupons should return them to their correspondents in the country of issue for redemption through the selling post office.

f. Postmasters must process exchanged foreign and redeemed U.S. international reply coupons as prescribed in 11-6.6, International Reply Coupons, in Handbook F-101, *Field Accounting Procedures*.

382 International Business Reply Service

382.1 Description

International Business Reply Service (IBRS) (in French, "Correspondance Commerciale-Réponse Internationale," abbreviated "CCRI") is similar to domestic business reply mail service. It allows envelopes and cards to be distributed to and deposited in certain foreign countries for return to the addressee in the United States without prepayment of postage. Postage and service fees are collected from the U.S. addressee at delivery. Extra services cannot be used with IBRS.

382.2 Availability

IBRS is available to every country and territorial possession in the world that is a destination point for U.S.-originating international mail. To be admissible in the international mails IBRS envelopes and cards must conform to the size, weight, and format requirements that are specified in 382.5 and 382.6 respectively. Qualifying mailpieces receive airmail treatment upon being returned by the foreign postal administrations to United States addressees. See 382.4 for the IBRS price that applies to each envelope or card that is returned to the holder of a business reply mail (BRM) permit.

Note: Domestic business reply items are not mailable outside the United States. If deposited in a foreign postal system they will be treated in accordance with that country's internal postal regulations and may not be returned to the U.S. addressee.

382.3 Who May Distribute IBRS Mail

In order to initiate IBRS mail the U.S. sender must be a business reply mail (BRM) permit holder who has paid the prescribed accounting fee to participate in the Qualified Business Reply Mail (QBRM) program (see DMM 507). Prior to producing IBRS mail the mailers must advise in writing the postmaster of the Post Office facility where their permit is held that they intend to distribute IBRS mail. IBRS mail must meet all specifications of QBRM including using unique ZIP+4®codes identification of the price category and using the corresponding barcode. The postmaster must assign the unique ZIP+4 codes as part of the application process. Participating mailers are encouraged to submit preproduction samples for approval. The postmaster responsible will issue a letter of authorization to the mailer.

382.4 Postage and Fees

See Notice 123, *Price List*, for the applicable price that applies to each card, or each envelope (up to a 2-ounce maximum).

Note: The price for each returned IBRS envelope and card includes postage and the applicable per piece fee that is applied to QBRM domestic business reply service. It is not necessary for the sender to obtain a separate international business reply permit to have IBRS items processed through their advance deposit account.

382.5 Size and Weight Requirements

382.51 Cards

The following size and weight requirements apply to cards:

a. Minimum size: 3-1/2 by 5-1/2 inches.

b. Maximum size: 4-1/4 by 6 inches.

c. Thickness: Not less than .007 inch nor more than .016 inch.

Note: IBRS cards must be printed on paper stock meeting a standard industry basis weight of 75 pounds with none less than 71.25 pounds for 500 sheets measuring 25 inches by 38 inches and must also have a thickness of at least .007 inch and not more than .016 inch. The paper must be free from groundwood except when coated with a substance that adds to the paper's ability to resist an applied bending force.

382.52 Envelopes

The following size and weight requirements apply to envelopes:

a. Minimum size: 3-1/2 by 5-1/2 inches.

b. Maximum size: 6-1/8 by 11-1/2 inches.

c. Thickness: Not less than .007 inch or more than .2 inch.

d. Maximum weight: 2 ounces.

382.6 Formatting Requirements

382.61 General

See Exhibit 382.6 for an illustration of an IBRS mailpiece showing the items and formatting requirements discussed in 382.62 through 382.68.

382.62 Air Mail Endorsement

The endorsement "AIR MAIL/PAR AVION" must appear in the upper left corner in reverse print. Immediately beneath this endorsement must appear the words "IBRS/CCRI NO." followed by the permit number.

382.63 FIM

Each IBRS mailpiece must contain a Facing Identification Mark (FIM) pattern C printed at the top middle right on the address side of the mailpiece. The formatting requirements for the placement of the FIM are as follows:

a. The top of the FIM C bar pattern must be within 1/8 of an inch of the edge of the mailpiece and may extend to the edge.

b. The rightmost bar of the pattern must be within 2 inches (plus or minus 1/8 of an inch) of the right edge of the mailpiece.

c. The FIM bars must be 5/8 of an inch long (plus or minus 1/8 of an inch).

d. The entire FIM pattern must be completely contained within a rectangular clear zone measuring 1-1/4 inches in length and 5/8 of an inch in height, with its top edge formed by the top edge of the mailpiece and its right edge beginning 1-3/4 inches from the right edge of the mailpiece.

382.64 No Postage Necessary Endorsement

The endorsement “NE PAS AFFRANCHIR NO POSTAGE NECESSARY IF MAILED TO THE UNITED STATES” must appear in the upper right corner of the face of the piece with a partial diagonal bar appearing in the upper left and lower right of the endorsement. The endorsement must not extend farther than 1-3/4 inches from the right edge of the mailpiece.

382.65 Horizontal Bars

A vertical column of horizontal bars parallel to the length of the mailpiece must appear immediately below the endorsement “NO POSTAGE NECESSARY IF MAILED TO THE UNITED STATES.” The formatting requirements for the horizontal bars are as follows:

a. The bars must be uniform in length and thickness — at least 1 inch long, and 1/16 of an inch to 3/16 of an inch thick.

b. The bars must be evenly spaced.

c. The lowest bar must not extend below the delivery address line, which is the line above the line containing the ZIP+4 code.

d. There must be at least 1/2 of an inch clearance between the ZIP+4 code and the bars.

382.66 Business Reply Legend

The legend “INTERNATIONAL BUSINESS REPLY MAIL/REPONSE PAYEE” or “INT’L BUSINESS REPLY MAIL/REPONSE PAYEE” must appear above the address. The formatting requirements for the legend are as follows

a. The legend must appear in capital letters at least 1/8 of an inch high.

b. Immediately below the legend, the words “PERMIT NO.” followed by the permit number and the issuing Post Office facility (city and state) must appear in capital letters.

c. The information in items a and b must appear between two horizontal bars at least 3/32 of an inch thick and at least 1/2 inch apart.

d. The endorsement “POSTAGE WILL BE PAID BY ADDRESSEE” must appear in capital letters immediately below the lower horizontal bar.

382.67 Delivery Address

The complete delivery address must appear on four lines as follows:

1. The name of the permit holder.
2. The street address and/or Post Office box number.
3. The city, state, and unique preassigned ZIP+4 code.
4. The country of destination (United States of America).

The formatting requirements for the complete delivery address are as follows:

a. The bottom line of the address must be no lower than 5/8 of an inch from the bottom edge of the mailpiece and no higher than 2-1/4 inches.

b. A clear margin void of any extraneous matter of at least 1/2 inch is required between the left edge of the mailpiece and the delivery address.

382.68 Barcode

382.681 Barcode Type

The unique ZIP+4 POSTNET™ or optional Intelligent Mail® barcode preassigned by the U.S. Postal Service must appear on the address side of each IBRS mailpiece. When a mailer uses the Intelligent Mail barcode option, the barcode must contain the barcode ID, service type ID, and correct ZIP+4 routing code, as specified in DMM 708.4.3. In addition, effective May 2011, the barcode must also contain a USPS-assigned Mailer ID.

382.682 Barcode Placement

The unique preassigned ZIP+4 barcode must appear on the address side of the mailpiece, positioned in either of the following two locations:

a. As part of the delivery address block as defined in DMM 202.5.7.

b. If printed directly on the mailpiece, within the barcode clear zone in the lower right corner of the piece. When a mailer uses this option, the "barcode read area" must be free of any printing other than the barcode. The formatting requirements for the barcode clear zone are as follows:

(1) The read area extends 5/8 of an inch from the bottom and 4-3/4 inches from the right edge of the mailpiece.

(2) The leftmost bar must be between 3-1/2 inches and 4-1/4 inches from the right edge of the mailpiece .

(3) The bottom of the barcode must be at least 3/16 inch from the bottom edge of the mailpiece.

(4) The top of the barcode must be no more than 1/2 inch from the bottom edge of the mailpiece.

Exhibit 382.6
Format Requirements — US IBRS

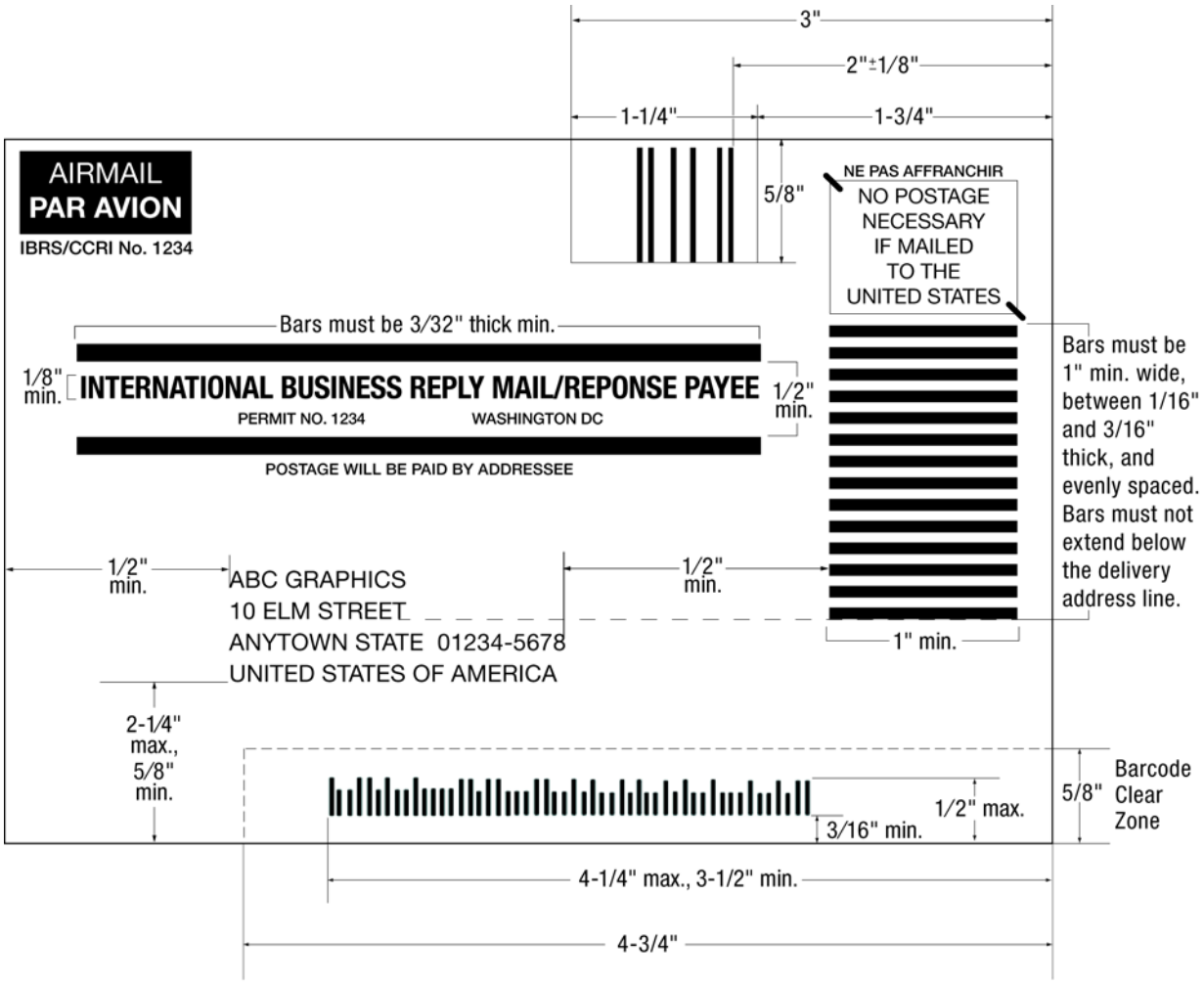

Drawing not to scale

382.7 Foreign International Business Reply Service

Mailers in the countries listed in 382.2 may be authorized to distribute IBRS mail in the United States. These items similar to the format in Exhibit 382.7 are accepted without the prepayment of postage for return by air to the destination country. These items are forwarded with ordinary letters and cards to the designated international air exchange office for return to the appropriate country.

Exhibit 382.7
Format Requirements — Foreign IBRS

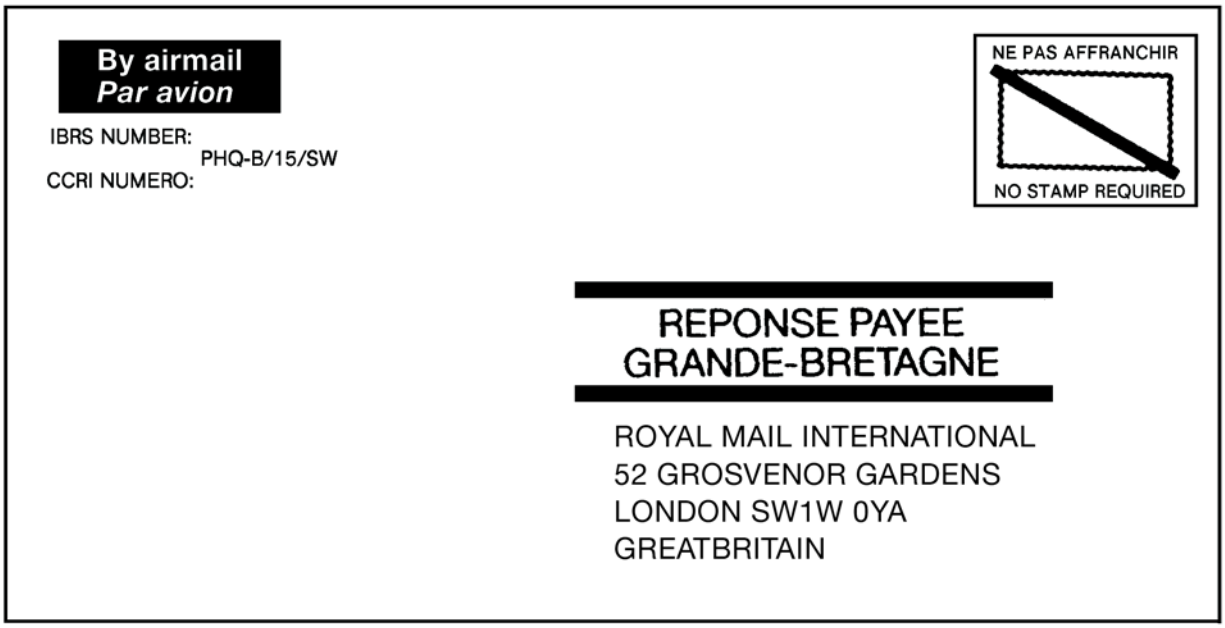

This page intentionally left blank

4 Treatment of Outbound Mail

410 Postmarking

The mailing office must postmark international mail as prescribed in POM 443.3.

420 Unpaid and Shortpaid Mail

421 Check for Sufficient Postage

Carefully check the postage on all outbound mail before dispatching it from the mailing office.

422 Unpaid Mail

422.1 Unpaid Mail With a Return Address

Regardless of mail class, return to the sender each unpaid mailpiece that has a return address. Endorse the mailpiece with rubber stamp R-1300-230, *Return For…Additional Postage*.

422.2 Unpaid Mail Without a Return Address

Regardless of mail class, forward each unpaid mailpiece that doesn't have a return address to the Mail Recovery Center for proper disposition.

423 Shortpaid Mail

423.1 General Procedures at the Originating Mailing Office

When shortpaid items are returned to sender, endorse the item "Returned For…Additional Postage." Enter the amount of the deficiency.

423.2 Disposition

Once the class of mail has been determined, follow the appropriate procedures below for shortpaid outbound international mail.

423.21 Global Express Guaranteed (GXG) Shipments

Shortpaid Global Express Guaranteed (GXG) shipments must be endorsed "POSTAGE PAID" and forwarded without delay to the appropriate Global Express Guaranteed processing site. Except for items paid with Click-N-Ship postage, immediately notify the sender of the action taken and request

payment of the deficient postage. Shortpaid Global Express Guaranteed shipments paid with Click-N-Ship will be collected automatically through this system.

Note: Global Express Guaranteed shipments must not be held for postage due payment unless the deficiency can be obtained from the sender without delaying the dispatch of the shipment.

423.22 Express Mail International Shipments

423.221 Items Paid With Permit Imprint, USPS-Produced PVI Label, or EMCA

Regardless of the amount of deficiency, consider as paid in full each shortpaid Express Mail International item that is paid with a permit imprint, a USPS-produced postage validation imprinter (PVI) label, or Express Mail corporate account (EMCA), and dispatch it to the appropriate International Service Center (ISC).

423.222 Items Paid With Any Other Postage Payment Method

The disposition of a shortpaid Express Mail International item paid with a postage payment method other than a permit imprint, USPS-produced PVI label, or EMCA is based on the amount of the deficiency, as follows:

a. Shortpaid $3.50 or less: Consider the item paid and dispatch it to the country of destination.

b. Shortpaid more than $3.50: Base the disposition on whether or not the item has a return address, as follows:

(1) With a return address: Return the item to the sender. Endorse the item with rubber stamp R-1300-230, *Return For…Additional Postage*.

(2) Without a return address: Forward the item to the Mail Recovery Center for proper disposition.

423.23 Priority Mail International Parcel Items (Other Than Priority Mail International Flat Rate Envelopes and Small Flat Rate Boxes)

423.231 Items Paid With a Permit Imprint or USPS-Produced PVI Label

Regardless of the amount of deficiency, consider as paid in full each shortpaid Priority Mail International parcel item that is paid with a permit imprint or USPS-produced postage validation imprinter (PVI) label, and dispatch it to the appropriate International Service Center (ISC).

423.232 Items Paid With Any Other Postage Payment Method

The disposition of a shortpaid Priority Mail International parcel item paid with a postage payment method other than a permit imprint or USPS-produced PVI label is based on the amount of the deficiency, as follows:

a. Shortpaid $3.50 or less: Consider the item paid and dispatch it to the country of destination.

b. Shortpaid more than $3.50: Base the disposition on whether or not the item has a return address, as follows:

(1) With a return address: Return the item to the sender. Endorse the item with rubber stamp R-1300-230, *Return For…Additional Postage*.

(2) Without a return address: Forward the item to the Mail Recovery Center for proper disposition.

Note: For Priority Mail International Flat Rate Envelopes and Small Flat Rate Priced Boxes, see 423.24.

423.24 First-Class Mail International Items (including Postcards), Airmail M-bags, Priority Mail International Flat Rate Envelopes, and Priority Mail International Small Flat Rate Priced Boxes

423.241 Items Paid With a Permit Imprint or USPS-Produced PVI Label

Regardless of the amount of deficiency, consider as paid in full each shortpaid First-Class Mail International item (including a postcard), Airmail M-bag, Priority Mail International Flat Rate Envelope, and Priority Mail International Small Flat Rate Priced Box that is paid with a permit imprint or USPS-produced postage validation imprinter (PVI) label, and dispatch it to the appropriate International Service Center (ISC).

423.242 Items Paid With Any Other Postage Payment Method

The disposition of a shortpaid First-Class Mail International item (including a postcard), Airmail M-bag, Priority Mail International Flat Rate Envelope, and Priority Mail International Small Flat Rate Priced Box that is paid with a postage payment method other than a permit imprint or USPS-produced PVI label is based on the amount of the deficiency, as follows:

a. Shortpaid $1.00 or less: Consider the item paid and dispatch it to the appropriate International Service Center (ISC). Endorse the item with a T-stamp in accordance with section 451.4 of Handbook T-5, *International Mail Operations*. If a T-stamp is not available, endorse the item with a *Postage Due* stamp and enter the amount of the deficiency on the mailpiece.

b. Shortpaid more than $1.00: Base the disposition on whether or not the item has a return address, as follows:

(1) With a return address: Return the item to the sender. Endorse the item with rubber stamp R-1300-230, *Return For…Additional Postage*.

(2) Without a return address: Forward the item to the Mail Recovery Center for proper disposition.

423.3 Credit for Postage Paid

When computing the postage due on items that are returned to sender for insufficient postage, allow a credit for the postage already paid.

423.4 Parcels at Other Than Mailing Offices

Originating Network Distribution Centers (NDCs) must check for shortpaid parcels addressed to Canada and Mexico. Sectional centers and other intermediate offices, however, should not attempt to verify postage payment on parcels.

430 Improperly Prepared Mail

431 Insufficient Address

If an item is improperly addressed, but the country of destination is legibly written, dispatch it to the exchange office. The exchange office will determine whether the address is sufficient.

Note: Due to heightened security, many foreign postal administrations require complete sender and addressee information in roman letters and arabic numerals on postal items.

432 Oversized or Undersized Items

Post Office facilities must return to the sender any item that is more than the prescribed maximum size or is less than the prescribed minimum size. If the sender is not known, the item must be dispatched to the mail recovery center.

433 Oversized Cards

Return oversized cards (those exceeding 9-1/4 x 4-3/4) to the sender. If the sender is unknown, dispatch cards to the exchange office.

434 Reply-Paid Cards

a. Reply-paid cards, except International Business Reply items, are not accepted as international mail.

b. Any outbound reply-paid cards bearing foreign postage (foreign reply-paid cards) must be returned to the sender for proper U.S. postage to be affixed. If there is no return address, send cards to mail recovery center.

435 Detached Customs Declaration Forms

When a detached customs declaration form is found, attempt to locate the related package and attach the form to it. If the package cannot be located, dispose of the customs declaration form as waste.

440 Extra Services Mail — Registered Mail

441 Recording and Dispatching

Record and dispatch outbound (international) Registered Mail items in the manner prescribed for domestic Registered Mail items.

442 Registered Mail Found With Ordinary Mail

442.1 Disposition

Return to the registered mailstream any item found in the ordinary mail that has been accepted as registered by the Postal Service.

442.2 Complete the Registration Process

Enter for Registered Mail service any item on which the sender has fully prepaid the postage and the registry fee and that has been endorsed to show that registry is desired. Send a mailing receipt (see 334.1) to the sender, including a reminder to the sender that mail to be registered must be presented at the Post Office facility for that purpose.

442.3 Shortpaid Mail

If the item has not been fully prepaid, return it to the sender after indicating that it is shortpaid and must be presented for registry at a Post Office facility. If the shortpaid registered item bears no return address, cross out the sender's registry endorsement and dispatch as ordinary mail.

This page intentionally left blank

5 Nonpostal Export Regulations

510 Office of Foreign Assets Control (OFAC) Regulations — U.S. Department of the Treasury

511 General

The Office of Foreign Assets Control (OFAC) of the U.S. Department of the Treasury administers and enforces economic and trade sanctions based on U.S. foreign policy and national security goals against targeted foreign countries and regimes, terrorists, narcotics traffickers, those engaged in activities related to the proliferation of weapons of mass destruction, and other threats to the national security, foreign policy, or economy of the United States.

512 Prohibited Destinations, Specially Designated Nationals, and Blocked Persons

Mailers may not send items to certain countries (Cuba, Iran, North Korea, and Sudan) or to a "blocked person." Blocked persons include individuals and entities (regardless of the mailing destination) that are listed on the OFAC Specially Designated Nationals (SDN) list. The SDN list is available online at *www.treas.gov/offices/enforcement/ofac/sdn/t11sdn.pdf*.

513 Additional Standards

In addition to the restrictions in 512, mailers may not send items to an entity if a blocked person owns 50 percent or more of that entity.

514 Exceptions

Many OFAC sanctions programs have exemptions that cover the mailing of items such as certain humanitarian donations, personal communications containing nothing of value, or informational materials like books, newspapers, and CDs. In addition, under each sanctions program, OFAC has established "general licenses" that authorize shipments under certain conditions. If no exemption or general license applies, a mailing may be allowed if the mailer applies for and obtains a "specific license" from OFAC.

The exemptions and general licenses are specific to each sanctions program, and mailers are advised to review the OFAC regulations applicable to the relevant sanctions program.

515 Mailer Compliance

Mailers are required to comply with these regulations. Mailers may be subject to civil and criminal penalties for failing to comply with any part of OFAC's regulations.

516 Additional Information

For additional information, including an explanation of each sanctions program, licenses, and exemptions, see the relevant set of OFAC's regulations for each sanctions program in 31 C.F.R. Chapter V, available at *www.treas.gov/ofac*, or contact OFAC at 202-622-2000.

520 Foreign Trade Regulations — U.S. Census Bureau

521 General

Subchapter 520 describes the various U.S. Department of Commerce, U.S. Bureau of the Census requirements when shipping goods internationally. In certain circumstances, customers are responsible for entering information on PS Form 2976 or 2976-A. Customers may be subject to civil and criminal penalties if they fail to electronically file their export information when required or if they fail to comply with the Foreign Trade Regulations in any other way.

522 Additional Assistance

Customers needing further assistance with filing requirements should contact the U.S. Census Bureau on its toll-free hotline at 800-549-0595:

a. Option 1 – Automated Export System Assistance.

b. Option 2 – Commodity Classification Assistance.

c. Option 3 – Regulatory Assistance.

523 Mailpieces Sent to APOs, FPOs, and DPOs

Goods mailed to APO/FPO/DPO addresses are not subject to the Foreign Trade Regulations. Accordingly, customers are not required to file electronic export information via the U.S. Census Bureau's Automated Export System or AESDirect Web site for such mailings, and they do not need to present a Proof of Filing Citation, AES Downtime Citation, or Exemption and Exclusion Legend.

524 Proof of Filing Citation (PFC)

524.1 General

Under the authority of 13 U.S.C. Chapter 9, as amended by the Foreign Relations Authorization Act of 2002, P.L. 107-228, U.S. Census Bureau regulations require electronic filing of export information through the U.S. Census Bureau's Automated Export System (AES) or AES*Direct* Web site for certain outbound international shipments of goods. Before mailing,

customers subject to this filing requirement are responsible for presenting a Proof of Filing Citation (PFC) or AES Downtime Citation as evidence of compliance.

The Census Bureau's regulations mandate that electronic export information be filed when any type of goods contained in a shipment (per Schedule B Export Codes at *www.census.gov/foreign-trade/schedules/b*) is valued at more than $2,500, requires an export license under U.S. law, or is being sent to certain countries designated as terrorist-supporting countries under the Export Administration Regulations, subject to certain exceptions. Following are three examples to illustrate the value criterion:

a. *Example 1*: An insured Priority Mail International package contains one mechanically operated watch (Schedule B item number 9101.11.0000) valued at $2,600. The total value of goods to be mailed is $2,600, and the value of all items within the same Schedule B number is more than $2,500. Consequently, electronic filing and a PFC would be required (unless an exemption or exclusion applies).

b. *Example 2*: An insured Priority Mail International package contains one mechanically operated watch (Schedule B item number 9101.11.0000) valued at $2,400, and one electronically operated watch (Schedule B item number 9101.91.0000) valued at $2,400. The total value of goods to be mailed is $4,800, but no group of items within the same Schedule B number is valued at more than $2,500. Consequently, electronic filing and a PFC would not be required because the mechanical watch and electronic watch are in different Schedule B groups. Rather, Exemption and Exclusion Legend "NOEEI 30.37(a)" would apply, assuming the items do not require an export license and are not being sent to a terrorist-supporting country (see 526.2).

c. *Example 3*: An insured Priority Mail International package contains two mechanically operated watches (Schedule B item number 9101.11.0000), one valued at $1,400 and one valued at $1,500. The total value of goods to be mailed is $2,900, and the value of all items within the same Schedule B number is more than $2,500. Consequently, electronic filing and a PFC would be required (unless an exemption or exclusion applies).

524.2 Filing Requirements

524.21 Mandatory Filing

Electronic filing of export information is required when any of the following applies:

a. One or more classes of goods (per Schedule B Export Codes at *www.census.gov/foreign-trade/schedules/b*) within the item are valued at more than $2,500, unless the shipment falls under an exemption or exclusion. See 524.1.

b. The item requires an export license under U.S. law. (See 530 for additional information.)

c. The shipment is destined to the terrorist-supporting countries of Iran or Syria.

d. The shipment is destined to the terrorist-supporting countries of Cuba, North Korea, or Sudan, and the shipment does not qualify as a "gift parcel or humanitarian donation" as defined by 15 CFR § 740.12.

Note: The terrorist-supporting countries are identified in Country Group E:1 in the Export Administration Regulations, 15 CFR Part 740 Supplement 1. As of October 5, 2009, they are the countries cited in items 524.1c and d.

524.22 How to File Electronic Export Information and Obtain a Proof of Filing Citation

To file electronic export information through the U.S. Census Bureau's Automated Export System or AES*Direct* Web site and obtain a PFC, customers should use the following steps:

1. Go to *www.aesdirect.gov*.
2. Register for an AESDirect account or log into your existing account.
3. Follow the instructions for the Automated Export System Certification Quiz.
4. The "Port of Export" code for shipping through the Postal Service is "8000."
5. The "Mode of Transport" is "Mail."
6. Leave the carrier as "SCAC/IATA," and leave the conveyance name fields blank.
7. After successfully filing electronic export information, AES*Direct* will provide an alphanumeric Internal Transaction Number (ITN) as confirmation. The PFC consists of the letters "AES" followed by the ITN: for example, "AES X20080930987654."

Note: If the Automated Export System is down, call the U.S. Census Bureau's toll-free information hotline at 800-549-0595, option 1. For additional information on electronic filing, use option 3.

525 AES Downtime Citation

If electronic export information filing is required but the U.S. Census Bureau's Automated Export System or AES*Direct* is unavailable, the mailer may ship the goods but is responsible for providing the appropriate AES Downtime Citation instead of a PFC. This citation includes the word "AESDOWN," the mailer's AES filer identification number, and the date: for example, "AESDOWN 123456789 09/30/2009."

526 Exemption and Exclusion Legend

526.1 General

In many circumstances, electronic export information filing and a PFC may not be required when mailing goods internationally. In these circumstances, customers are directed to apply an applicable Exemption and Exclusion

Legend on the customs declaration form upon mailing. The following conditions apply:

a. A mailer may enter one Exemption and Exclusion Legend per addressed mailpiece. When multiple exemptions may apply, the mailer may select any one that applies.

b. A mailer cannot apply Exemption and Exclusion Legends to shipments that require an export license.

526.2 When Applicable

Customers with shipments not meeting the mandatory filing requirements under 524.21 may apply an Exemption and Exclusion Legend such as the following on each customs declaration form:

a. "NOEEI 30.37(a)" for shipments when the value of each class of goods is $2,500 or less. Mailers cannot apply this exemption to shipments that require an export license or to shipments to countries identified as terrorist-supporting countries in the Export Administration Regulations (currently, Cuba, Iran, North Korea, Sudan, and Syria).

b. "NOEEI 30.36" for shipments to Canada that do not require an export license.

c. "NOEEI 30.37(h)" for shipments of gift parcels and humanitarian donations as defined in 15 CFR § 740.12. This exemption may apply only to qualifying shipments to certain terrorist-supporting countries identified in 524.21c (currently, Cuba, North Korea, and Sudan). In addition, the mailer must endorse the item with the marking "GIFT — Export License Not Required" on the address side of the package. The mailer must also write "GFT" in the same block as the Exemption and Exclusion Legend on the applicable required customs declaration, as described in 527. The mailer must also complete all other blocks of the customs declaration form — including the "Detailed description of contents."

Note: For more information and a complete listing of these and other Exemption and Exclusion Legends, see Appendix C of the Foreign Trade Regulations, 15 CFR Part 30.

527 Placement of PFC, AES Downtime Citation, or Exemption and Exclusion Legend

When shipments require a PFC, AES Downtime Citation, or Exemption and Exclusion Legend, it is the customer's responsibility to legibly write the PFC, AES Downtime Citation, or Exemption and Exclusion Legend on the applicable customs declaration form as follows:

a. On the May 2009 and January 2009 editions of PS Form 2976-A, *Customs Declaration and Dispatch Note* — CP 72 (large white form), customers should write one PFC, AES Downtime Citation, or applicable Exemption and Exclusion Legend in block 11.

b. On editions of PS Form 2976-A printed before January 2009, customers should write one PFC, AES Downtime Citation, or applicable Exemption and Exclusion Legend at the top of the form or in any clear space. Avoid writing over the barcode on the form.

c. On editions of PS Form 2976, *Customs Declaration CN 22 — Sender's Declaration*, dated September 2009 or later, customers should check "NOEEI § 30.37(a)" or "NOEEI § 30.37(h)" in block 7 of the form, depending on the applicable Exemption and Exclusion Legend.

Note regarding Cuba: Consumer communications devices, computers, and software (CCD) items sent to Cuba require an electronic filing when not included as a gift parcel — see the Individual Country Listing for Cuba for information regarding CCD items. Customers using editions of PS Form 2976 dated September 2009 or later to ship CCD items to Cuba should (1) completely obliterate the check boxes and text referring to NOEEI § 30.37(a) and NOEEI § 30.37(h) and (2) write one PFC or AES Downtime Citation.

d. On editions of PS Form 2976 printed before September 2009, customers should write one applicable Exemption and Exclusion Legend ("30.37(a)" or "30.37(h)") in the margin on the green portion of the form.

Note regarding Cuba: CCD items sent to Cuba require an electronic filing when not included as a gift parcel — see the Individual Country Listing for Cuba for information regarding CCD items. Customers using editions of PS Form 2976 printed before September 2009 to ship CCD items to Cuba should write one PFC or AES Downtime Citation in the margin on the green portion of the form.

e. On editions of the Global Express Guaranteed Air Waybill/Shipping Invoice (shipping label, Item 11FGG1) printed before August 2008, customers should write "NOEEI 30.37(a)" next to the sender's signature. Current versions of Item 11FGG1 have this exemption legend included on the mailing label.

Note: These standards also apply to mailers who produce privately printed customs declaration forms under 123.3.

530 Commodities and Technical Data

531 Scope and Applicability of Export Licensing Requirements

531.1 U.S. Department of Commerce — Bureau of Industry and Security; Export Controls

The Department of Commerce's Bureau of Industry and Security (BIS) regulates the export of commodities, software, and technologies in certain circumstances, pursuant to the Commerce Department's Export Administration Regulations (EAR) (15 CFR Parts 730–774). Among other things, BIS requires exporters to apply for and receive a license before sending certain commodities, software, or technology out of the country. The EAR can be found online at *www.access.gpo.gov/bis*.

Other U.S. government agencies have export control responsibilities for regulating more specialized exports. For example, military goods might be

subject to the licensing jurisdiction of the Directorate of Defense Trade Controls at the Department of State. The Department of the Treasury's Office of Foreign Assets Control (OFAC) administers and enforces economic and trade sanctions against targeted foreign countries, terrorism-sponsoring organizations, international narcotics traffickers, and other blocked entities. The BIS Web site identifies resource links for various U.S. government agencies with export control responsibilities. Customers may obtain a listing of these links at *www.bis.doc.gov/About/reslinks.htm*.

531.2 Export Enforcement

BIS implements and enforces the EAR. Many items regulated by the EAR are referred to as "dual-use" items, meaning that the items have both commercial and military or proliferation applications. However, many purely commercial items also are subject to the EAR. BIS's mission is to advance U.S. national security, foreign policy, and economic objectives by ensuring an effective export control and treaty compliance system and by promoting continued U.S. strategic technology leadership. Senders must understand and comply with BIS's regulations when exporting commodities, software, or technology by mail. Postal Service employees will not advise prospective mailers of the type of license required for or the type of authorization available for the export of any item to any destination or recipient. However, if an export control violation has occurred or might occur, or for more information, contact the following source:

OFFICE OF EXPORT ENFORCEMENT (OEE)
BUREAU OF INDUSTRY AND SECURITY
U.S. DEPARTMENT OF COMMERCE
1401 CONSTITUTION AVE. NW
WASHINGTON, DC 20230-0002

TELEPHONE: 202-482-1208.

In addition, OEE has nine field offices located throughout the United States. Information about these field offices is available at *www.bis.doc.gov/about/programoffices.htm*.

532 Export Licenses

532.1 General

BIS might require an export license based on several factors specific to a mailer's transaction: the nature and use of the item (commodity, software, or technology) being exported, its destination, the consignee, and the end user. Exports to certain countries are more heavily restricted than others. For example, BIS maintains comprehensive controls against countries designated as "terrorist-supporting countries" (as of October 2009, these countries are Cuba, Iran, North Korea, Sudan, and Syria).

532.2 Export — Definition

Any item that is sent from the United States to a foreign destination is an export. “Items” include commodities, software, and technology. For example, clothing, building materials, circuit boards, automotive parts, blueprints, design plans, retail software packages, and technical information are “items” that may be subject to export control.

In determining export license requirements, it does not matter how an item is transported outside the United States. For example, an item can be sent by regular mail or hand-carried on an airplane; a set of schematics can be sent via facsimile to a foreign destination, software can be uploaded to or downloaded from an Internet site, or technology can be transmitted via e-mail or during a telephone conversation. Regardless of the method used for the transfer, the transaction is considered an “export” for export control purposes. An item is also considered an export even if it is leaving the United States only temporarily, if it is leaving the United States but is not for sale (e.g., a gift), or if it is being mailed to a wholly-owned U.S. subsidiary in a foreign country. Finally, under the EAR, release of technology or source code subject to the EAR to a foreign national in the United States is “deemed” to be an export to the home country of the foreign national.

532.3 How to Determine If an Export License Is Needed

A relatively small percentage of U.S. exports require an export license from BIS. License requirements are dependent upon an item’s technical characteristics, destination, recipients, and end use. The value of the shipment does not affect the export license requirements. It is the mailer’s responsibility to determine if an export requires a license under the EAR. For further assistance about whether an export license might be required, visit *www.export.gov/regulation* or *www.bis.doc.gov/licensing*, or call 202-482-4811.

532.4 Additional Information

Additional information concerning export licenses is available from the U.S. Department of Commerce as follows:

a. Mailers located in Alaska, Arizona, California, Colorado, Hawaii, Idaho, Montana, Nevada, New Mexico, Oregon, Utah, Washington, and Wyoming should contact either of the following offices:

- BIS WESTERN REGIONAL OFFICE
  U.S. DEPARTMENT OF COMMERCE
  3300 IRVINE AVE., STE. 345
  NEWPORT BEACH, CA 92660-3112
  Telephone: 949-660-0144
  Fax: 949-660-9347
  e-mail: *biswest@bis.doc.gov*
- BIS WESTERN REGIONAL OFFICE — NORTHERN CA BRANCH
  U.S. DEPARTMENT OF COMMERCE
  160 WEST SANTA CLARA ST., STE. 725
  SAN JOSE, CA 95113-1758
  Telephone: 408-998-8806
  Fax: 408-998-8677
  e-mail: *biswest@bis.doc.gov*

b. Mailers in all other locations should contact the following office:

OFFICE OF EXPORTER SERVICES
OUTREACH AND EXPORTER SERVICES DIVISION
U.S. DEPARTMENT OF COMMERCE
14TH ST. & PENNSYLVANIA AVE. NW
WASHINGTON, DC 20230-0001

Telephone: 202-482-4811
Fax: 202-482-2927
e-mail: *ecdoexs@bis.doc.gov*

533 Additional Standards

533.1 Shipper's Export Declaration

Commerce Form 7525-V, *Shipper's Export Declaration*, is obsolete and no longer accepted by the Postal Service.

533.2 Shipper's Electronic Export Filing Required

If an export requires a license, the customer must electronically file export information with the U.S. Bureau of the Census before mailing (see 520).

533.3 Processing at Post Office Facilities

For items requiring an export license, Postal Service personnel at Post Office facilities must verify that the customs declaration is complete (see 123), including a license number in block 17 and a Proof of Filing Citation or AES Downtime Citation (see 520) in block 11.

540 Munitions (Defense Articles) and Related Technical Data

541 Licensing Requirements

541.1 Individual Licenses

541.11 Exporting Defense Articles

The exportation of defense articles requires a license issued by the U.S. Department of State, Directorate of Defense Trade Controls (DDTC). Information related to DDTC can be found at its website at *www.pmddtc.state.gov/index.html*. Defense articles subject to the license requirement can be found on the United States Munitions List in 22 CFR Part 121. Information concerning licenses for the export of defense articles can be found online in 22 CFR Part 123 of the International Traffic in Arms Regulations (ITAR) at *www.pmddtc.state.gov/regulations_laws/itar_official.html*.

541.12 Exporting Technical Data

The exportation of "technical data" as defined in 541.121 requires a license issued by the Department of State, Directorate of Defense Trade Controls (DDTC). Information related to DDTC can be found at its website at

www.pmddtc.state.gov/index.html. Information concerning licenses for the export of technical data can be found in 22 CFR Part 125 of the ITAR.

Information concerning licenses for the export of technical data can be found online in 22 CFR Part 125 of the ITAR at www.pmddtc.state.gov/regulations_laws/itar_official.html.

541.121 **Technical Data — Definition**

According to § 120.10 of the ITAR, "technical data" is defined as follows:

1. Information, other than software as defined in § 120.10(a)(4), that is required for the design, development, production, manufacture, assembly, operation, repair, testing, maintenance, or modification of defense articles. This includes information in the form of blueprints, drawings, photographs, plans, instructions, and documentation.
2. Classified information relating to defense articles and defense services.
3. Information covered by an invention secrecy order.
4. Software as defined in § 121.8(f) directly related to defense articles.

"Technical data" does not include information concerning general scientific, mathematical, or engineering principles commonly taught in schools, colleges, and universities, or information in the public domain as defined in § 120.11. It also does not include basic marketing information on function or purpose or general system descriptions of defense articles.

541.122 **Technical Data — Exempt From Licensing**

Technical data that has been published or that is otherwise exempt from licensing under 22 CFR Part 125 of the ITAR does not require a Department of State license for exportation. However, the sender must mark the outside of the mailpiece, identifying the specific subsection under which the exemption is claimed (e.g., "22 CFR 125.4…APPLICABLE," if 22 CFR § 125.4 is the citation for the relevant exemption).

541.2 Prohibited Countries

Technical data exemptions under 541.122 and requests for licensees to export defense articles under 541.11 may not be made for items destined to or originating in certain prohibited countries. These countries are listed in 22 CFR § 126.1 of the ITAR. The mailer should visit the DDTC website at www.pmddtc.state.gov for a current listing. As of April 2010, these countries include the following:

1. Belarus.
2. Burma.
3. China.
4. Congo, Democratic Republic of the.
5. Cote d'Ivoire.
6. Cuba.
7. Eritrea.
8. Iran.
9. Iraq.
10. Lebanon.

11. Liberia.
12. Korea, Democratic People's Republic of (North Korea).
13. Sierra Leone.
14. Somalia.
15. Sudan.
16. Syria.
17. Venezuela.

Note: Mailers are advised to check the current version of 22 CFR § 126.1 of the ITAR for an updated list before mailing, as the list is subject to change.

541.3 Exporting of Government Shipments

Shipments mailed by or for any U.S. government agency do not require an individual license from the Department of State so long as all requirements of 22 CFR §126.4 can be met. The sender must mark the mailpiece with the applicable subsection of §126.4 (e.g., "22 CFR 126.4(a) APPLICABLE").

541.4 Obtaining Additional Information

The sender may obtain information from the DDTC Response Team, regarding the applicability of the Department of State requirements and application for an individual license. In addition, the DDTC Response Team handles process and status questions, and it assists mailers and other exporters with more complex questions involving export control issues. The DDTC Response Team should provide substantive responses within 24 hours of receiving inquiries. The DDTC Response Team can be contacted by telephone at 202-663-1282 or by e-mail at *DDTCResponseTeam@state.gov.*

542 Mailing Under Individual Licenses

542.1 Marking by Sender

For shipments under an individual license, the sender must mark the mailpiece, "DEPARTMENT OF STATE EXPORT LICENSE NO. _____." If only a portion of the amount authorized is mailed, the sender must enter in the area provided on the license the amount (quantity and/or value) being shipped. In addition, the sender must record the license number in Block 17 of PS Form 2976-A.

542.2 Processing at Post Office Facilities

542.21 Examination of List of Contents

When a sender presents a Department of State license, compare the description of the article indicated on the license with the description of the contents shown on the customs declaration form (see 123), or stated orally by the sender in the case of technical data mailed as printed matter (see 541.121). If no discrepancy is noted, the contents of the package are mailable, and if the destination is not one of the prohibited countries under 541.2, accept the package for mailing.

542.22 Amount of Mailing Authorized by License

If the mailing comprises the entire contents authorized by the license, retrieve the license from the sender, mark the license "completed," apply a legible postmark, and forward it to the following address:

PM/DDTC SA-1 12TH FLOOR
DIRECTORATE OF DEFENSE TRADE CONTROLS
BUREAU OF POLITICAL MILITARY AFFAIRS
U.S. DEPARTMENT OF STATE
WASHINGTON DC 20522-0112

If a mailing includes only a portion of the contents authorized, the mailer must enter in the area provided on the license the amount (quantity and/or value) being shipped and present the item for mailing at a Post Office facility, where it will be postmarked and returned to the sender. The mailer should bring back the same license to mail the rest of the items.

550 Dried Whole Eggs

551 Description

When dried whole eggs purchased under a program of the Commodity Credit Corporation, U.S. Department of Agriculture, are offered for export by mail, an endorsement must be written or stamped on each package and a special certificate of mailing (see 552) prepared and completed by the sender waiving any right to withdraw the package from the mail or to have it returned. Such mailings can be made only by Priority Mail International.

552 Charges

A charge equal to the individual Certificate of Mailing fee (see Notice 123, *Price List*) will be made for each special certificate of mailing, or for each package if a single certificate covers more than one package. As prescribed in 553.21, postage stamps to cover the charge will be affixed to the certificate and canceled.

553 How to Mail

553.1 Preparation by Sender

553.11 Marking

The endorsement referred to in 551 must be properly completed and signed by the exporter or an authorized representative over his or her title. The Priority Mail International forms accompanying applicable parcels should be completed by the sender to indicate that the parcels are to be abandoned in case of nondelivery.

553.12 Certificate of Mailing Dried Whole Eggs

553.121 Type of Certificate

A certificate as shown in Exhibit 553.121, prepared and completed by the sender, must be presented with all shipments described in 551.

Exhibit 553.121
Certificate of Mailing Dried Whole Eggs

CERTIFICATE OF MAILING DRIED WHOLE EGGS

I hereby certify that there has (have) been posted at this Post Office facility today by (Sender), parcels containing a total of (Number) pounds of dried whole eggs on which the sender has waived the right to withdraw same from the mail or have same returned.

Parcels addressed to

_____
(Name and addresses of addressees)

_____ _____
(Office stamp) (Postmaster)
(Date)

_____
By

553.122 **Single Certificate**

A single certificate may cover any number of parcels mailed by the same sender even though addressed to different countries.

553.2 Processing in Office of Mailing

553.21 **Postage**

Postage to cover the charge for the certificate of mailing dried whole eggs must be affixed to the certificate and canceled by the postmark of the office of mailing.

553.22 **Signature of Postmaster**

After postmarking, the certificate should be signed by the postmaster or an authorized representative and returned to the sender.

560 (Reserved)

570 Consular and Commercial Invoices

Many countries require special documents to be prepared by the sender and to be either presented by the addressee or enclosed within the package. In some cases, certification by a recognized Chamber of Commerce in the United States, or legalization by a consulate in the country of destination, or

both, are required. Such information as has been made available to the U.S. Postal Service concerning these requirements appears under the *Observations* in the Individual Country Listings.

580 Drawback Arrangement

581 Description

Drawback is an arrangement provided for under Customs Service regulations whereby exporters of certain merchandise are entitled to claim a refund of (a) the duty paid on imported material used wholly or in part in the manufacture or production of items to be exported, or (b) the internal revenue tax paid on domestic material used.

582 Processing Drawback Claims

582.1 Forms Required

582.11 List of Forms

The following forms must be used when drawback is claimed:

a. *Notice of Exportation of Articles with Benefit of Drawback* (Customs Form 7511).

b. *Waiver of Sender's Right to Withdraw Package From the Mail* (Customs Form 3413).

582.12 Where to Obtain the Forms

Exporters may obtain Customs Form 7511 and 3413 from the customs offices listed in 711.62.

582.2 Preparation by Senders

582.21 Claiming Drawback

Senders intending to claim drawback on items exported by mail must present three completed copies of a *Notice of Exportation of Articles with Benefit of Drawback* (Customs Form 7511) with the package or packages.

582.22 Waiver of the Right to Withdraw the Package

A waiver of the right to withdraw the package from the mail must appear on the address side of each package. This waiver may be made on Customs Form 3413 and affixed to the wrapper, or may be stamped or written in wording similar to that shown in Exhibit 582.22.

Exhibit 582.22
Waiver of the Right to Withdraw the Package

WARNING
EXPORTED IN BOND FOR DRAWBACK
UNDER N.E. NO.

Must not be returned to shipper or delivered in United States before submission to District Director of Customs.

Shipper _____

_____

We hereby waive our right to withdraw this package from the mail.

_____
Shipper's Signature

582.3 Processing by Postmaster

582.31 Postmaster's Certification

Postmark and sign the Postmaster's Certificate on the reverse side of Customs Form 7511 after verifying that the marks and numbers on the form conform to those on the package and that the sender has signed the statement waiving the right to withdraw the package from the mail.

582.32 Disposal of Forms

Dispose of completed Customs Form 7511 as follows:

a. Return one copy to the sender.

b. Forward one copy to the customs port where the claim is to be filed (shown on the front of the form).

c. Retain one copy as a Post Office record. Dispose of this copy after 3 years.

590 Exporting Wildlife and Protected Plants

591 Special Requirements for Wildlife and Certain Plant Exports

Exports of wildlife items and products may be subject to declaration, license, marking, and permit requirements enforced by the U.S. Fish and Wildlife Service (USFWS). Similar requirements also apply to plants protected as endangered or threatened under U.S. law or international treaty. Live wildlife and dead animals, with only a few exceptions, may not be exported via the U.S. Postal Service (see 138.1).

592 Declaration Requirements

592.1 Declaration of Wildlife Exports

The following wildlife exports must be declared to USFWS and must receive clearance prior to export:

a. Commercial exports of wildlife products.

b. Shipments of items not intended for commercial use valued at $250 or more.

c. Noncommercial shipments of items that require a permit for export (e.g., products made from endangered species or migratory birds) regardless of the dollar value of the shipment.

To declare a wildlife export, shippers must complete and file Form 3-177, *Declaration for Importation or Exportation of Fish or Wildlife,* with USFWS. Copies are available from wildlife inspection offices (see 598), from the U.S. Customs Service, or on the Internet at *www.fws.gov/le/ImpExp/faqs.htm*.

592.2 Declaration of Scientific Specimens or Parts

Form 3-177 is not required at the time of export for shipments of dead, preserved, dried, or embedded scientific specimens or parts when:

a. The shipment does not require a permit from USFWS.

b. The shipment is exported by an accredited scientist or accredited scientific institution for taxonomic or systematic research purposes.

Instead, the scientist or scientific institution (or an agent acting on their behalf) must file Form 3-177 with the assistant regional director for law enforcement in the USFWS administrative region from which the export was mailed within 180 days of export. Contact information is available on the Internet at *www.le.fws.gov* (click on *Contacts*).

592.3 Declaration of Plant Exports

The export of protected plants is regulated by the U.S. Department of Agriculture's Animal and Plant Health Inspection Service (APHIS). Plant Protection and Quarantine (PPQ) is a program within APHIS. Shippers should contact the PPQ division for additional information about export requirements for protected plants. Exporters who engage in the commercial trade of plants listed under the Convention on International Trade in Endangered Species of Wild Fauna and Flora (CITES) must obtain a general permit from PPQ in addition to meeting the permit requirements described in 596. All plant exports are subject to phytosanitary inspection and certification rules administered by PPQ. Information about plant export requirements can be found at *www.aphis.usda.gov/import_export/index.shtml*.

593 Export Licenses and Inspection Requirements for Commercial Wildlife Exports

Individuals or companies that commercially export wildlife must have a valid import/export license from USFWS. Exporters must notify USFWS and make their shipments available for inspection at least 48 hours before the planned exportation date. Exporters must pay appropriate inspection fees.

594 Marking Requirements for Wildlife Exports

All packages containing wildlife products must be marked clearly with the name and address of both the shipper and the recipient. Information identifying the contents as fish or wildlife and specifying the quantity and species involved must accompany the shipment. Federal regulations (50 CFR Part 14, Subpart H) explain how to comply with wildlife marking requirements. See 597.

595 Permit Requirements for Wildlife and Plant Exports

Permits are required to export any of the following by mail or other means:

a. Any wildlife or plant (including parts and products) where the species is listed under CITES. A list of species protected under this treaty is maintained by USFWS at *http://international.fws.gov*.

b. Any wildlife or plant (including parts and products) where the species is listed as endangered or threatened under the U.S. Endangered Species Act. Lists of these species can be found at *www.fws.gov/endangered*.

c. Migratory birds, parts, feathers, nests, eggs, or items made from them. Permit requirements for export and numerous other protections apply to more than 700 bird species safeguarded under the Migratory Bird Treaty Act. A list can be found on the Internet at *www.fws.gov/migratorybirds/RegulationsPolicies/mbta/mbtandx.html*.

CITES-listed herbarium specimens; other preserved, dried, or embedded museum specimens; and live plant material may be exported as a noncommercial loan, donation, or exchange between registered scientists or registered scientific institutions using a CITES-authorized label instead of an export permit.

596 Obtaining and Using Permits for Wildlife and Protected Plant Exports

596.1 Export Permits

Shippers who need export permits or other documentation required under CITES or the Endangered Species Act should contact USFWS Office of Management Authority (800-358-2104) for the appropriate application forms and instructions. Some CITES-listed species also require permits from the importing country before they can be legally exported.

596.2 CITES Permit

The original CITES permit must accompany the shipment. All wildlife exports requiring a CITES permit that are shipped by mail, including personal items mailed overseas, must be declared to USFWS and made available for inspection and permit validation by USFWS wildlife inspectors. Exports of CITES-protected plants must be declared to the U.S. Department of Agriculture's Animal and Plant Health Inspection Service; permits for these shipments must be validated by that agency before export.

596.3 Export of Migratory Birds

The export of migratory birds, their parts, feathers, eggs, or nests, or products made from them, is prohibited except with a permit from USFWS. Permit applications and information are available from the regional Migratory Bird Permit Offices located in Albuquerque, NM; Anchorage, AK; Atlanta, GA; Denver, CO; Fort Snelling, MN; Hadley, MA; and Portland, OR.

597 How to Obtain Additional Information

Additional information about exporting wildlife products and protected plants can be found in the following sections of the Code of Federal Regulations (CFR):

a. 50 CFR Part 14, Importation, Exportation, and Transportation of Wildlife.

b. 50 CFR Part 23, Endangered Species Convention.

c. 50 CFR Part 24, Importation and Exportation of Plants.

These and other Federal regulations, including those governing endangered species (50 CFR Part 17) and migratory bird permits (50 CFR Part 21), may be accessed online at *http://www.gpoaccess.gov/cfr/index.html*.

Shippers may also contact USFWS wildlife inspection offices for assistance with wildlife exports. Questions about the export of protected plants should be addressed to the U.S. Department of Agriculture's Animal and Plant Health Inspection Service. A list of Agriculture Inspection Stations and Offices appears in 723.

598 Wildlife Inspection Offices

USFWS wildlife inspection offices are located in the cities listed below. Addresses and phone numbers for these offices can be found on the Internet at *www.le.fws.gov* (click on *Contacts*).

Agana, GU	Denver, CO	New Orleans, LA
Anchorage, AK	Detroit, MI	New York, NY
Atlanta, GA	Dunseith, ND	Newark, NJ
Baltimore, MD	El Paso, TX	Nogales, AZ
Blaine, WA	Great Falls, MT	Portland, OR
Boston, MA	Honolulu, HI	San Diego, CA
Brownsville, TX	Houston, TX	San Francisco, CA
Buffalo, NY	Laredo, TX	Seattle, WA
Chicago, IL	Los Angeles, CA	Tampa, FL
Dallas, TX	Minneapolis, MN	

6 Special Programs

610 Postal Qualified Wholesaler Program

611 Description

The Postal Qualified Wholesaler Program of the United States Postal Service establishes relationships between the Postal Service and wholesalers of international mail so that the business of both parties is increased through worksharing and volume pricing. Any Postal Qualified Wholesaler using a representative or agent must ensure that the representative or agent adheres to the same rules and regulations of the Postal Qualified Wholesaler Program when preparing and tendering qualified international mail to the Postal Service.

612 Pricing

A Postal Qualified Wholesaler will receive prices from the Postal Service, including applicable volume pricing or an International Customized Mail price, if special circumstances warrant, for any available service offered by the Postal Service for its use in submitting bids to customers.

613 Qualifying as a Wholesaler

613.1 Letter of Request

Any company desiring to be a Postal Qualified Wholesaler must submit a letter of request to:

EXECUTIVE DIRECTOR, GLOBAL BUSINESS MANAGEMENT
US POSTAL SERVICE
475 L'ENFANT PLZ SW RM 4011
WASHINGTON DC 20260-4011

The letter must demonstrate how a company meets the criteria listed in 613.2. The company must certify that it is not disqualified from being a Postal Qualified Wholesaler under the guidelines listed in 613.3 and state that it agrees to all of the terms and conditions of the Postal Qualified Wholesaler Program. The Postal Service will make the final determination of who shall be a Postal Qualified Wholesaler.

613.2 Criteria

The wholesaler:

a. Must have a minimum of one year of experience as an international or domestic mail consolidator, presorter, or letter shop.

b. Must have realized at least $1 million in gross international revenues with the Postal Service in the most recent calendar year for services it provided in connection with mail that originated in the United States.

c. Must use a permit imprint that is allowable under the postage payment systems referenced in DMM 705. The wholesaler may use its own permit or that of its customers. If the wholesaler uses the customer's permit, then the wholesaler and its agent must specify to the Postal Service the permit numbers used and provide an additional itemized report identifying the volume and revenue for each international mailing.

d. Must have the ability to collect international mail at customers' facilities on a daily (Monday through Friday) basis. If the wholesaler and its agent provide pick-up of mail on Saturdays, Sundays, and/or holidays, it must state those days it provides pick-up service.

e. Must perform the actual handling and preparation of the international mail prior to tendering to the Postal Service in accordance with the applicable mail makeup requirements, maintain a processing facility and staff to provide the services described herein, and state the address and square footage of the facility and the number of persons employed who are involved in the handling and preparation of international mail.

f. Must have experience, capability, and knowledge to presort, pouch, or otherwise containerize the customer's international mail per the Postal Service requirements for any available service offered by the Postal Service.

g. Must have the ability to transport and tender the international mail to an agreed-upon Postal Service acceptance point.

h. Must give at least the following percentages of its gross revenue from international mailing to the Postal Service:

   (1) First year of qualification: At least 75%.

   (2) Second year of qualification: At least 85%.

   (3) Third year and subsequent years of qualification: At least 90%.

i. Must be familiar with or take steps to comply with the Malcolm Baldridge National Quality Award Program and/or ISO 9000 certification. If a wholesaler has ISO 9000 certification, it must state the date of such certification and provide a copy of its certification award to the Manager, Postal Qualified Wholesalers.

Note: Any Postal Qualified Wholesaler using a representative or agent must ensure that the representative or agent adheres to the rules and regulations of the Postal Qualified Wholesaler Program when preparing and/or tendering qualified international mails to the Postal Service.

613.3 Disqualification

Any wholesaler will be disqualified as a Postal Qualified Wholesaler if it does not meet any of the following conditions:

a. Must first recommend Postal Service services to its customers who request international mailing services.

b. Must use the level of Postal Service international service that the customer requires and for which the customer has paid.

c. Neither the wholesaler, a subsidiary, an affiliate, an agent, nor a parent company can be:

(1) On the List of Parties Excluded from Procurement Programs of the Postal Service and the United States Government.

(2) A licensed wholesaler or consolidator of any foreign postal administration, or owned by or a division of any foreign postal administration.

(3) A direct competitor of the Postal Service domestically or internationally that provides expedited or parcel delivery services or air transportation services.

(4) Must not be in arrears for any amount due to the Postal Service.

d. Gross revenue from non-Postal Service mail included in 613.2h does not include revenues which the wholesaler, a subsidiary, an affiliate, or a parent company receives for remail when the wholesaler's customer selects the remail service and directs the wholesaler to use the remail service.

e. The wholesaler shall describe any value-added services provided in addition to collection, sortation, and tendering of international mail. For any value-added service, the wholesaler must state how it meets the requirements of 613.2e and must specify if the value-added services are completed in-house or are subcontracted.

614 Benefits

614.1 Qualified List

The Postal Service will maintain a list of Postal Qualified Wholesalers. The list shall be distributed upon request to any person who indicates a need for an international wholesaler. The list shall include all services that the wholesaler provides in addition to collection, sortation, and tendering of international mail.

614.2 Preapproved Advertising

A wholesaler may state that it has been qualified as a Postal Qualified Wholesaler of the Postal Service. Any use of the Postal Service logo or any Postal Service trademark or advertising material, including letterhead and stationery, stating that the wholesaler has been qualified by the Postal Service must be approved in advance and in writing by the Manager, Postal Qualified Wholesalers.

614.3 Right of First Refusal

Postal Qualified Wholesalers must give the Postal Service the first opportunity to handle any international mail originating in the United States that it receives from its customers. This includes giving the Postal Service the first opportunity to quote prices for handling mail that is the subject of a formal or informal request for proposals or quotes from a customer. If the services of a wholesaler are needed, the Postal Service may request competitive bids from all Postal Qualified Wholesalers when it quotes prices for handling international mail that is the subject of a formal or informal request for proposals or quotes from a customer.

615 Length of Qualification

615.1 Approval Period

Each wholesaler will be qualified for a period of two years. At the end of that two-year period the Postal Service must again qualify the wholesaler.

615.2 Disqualification

If the Postal Service discovers at any time, by whatever means, that the wholesaler has not complied with any of the terms and conditions herein, the Manager, Postal Qualified Wholesalers will send the wholesaler written notice via Express Mail that it has not complied with these terms and conditions and that it will be stricken from the list of Postal Qualified Wholesalers. The wholesaler will have three business days to respond in writing via Express Mail to the Manager, Postal Qualified Wholesalers that it should not be removed from the list and the reasons why it should not be stricken. The Postal Service will render its decision on the objection within five business days after its receipt.

7 Treatment of Inbound Mail

710 U.S. Customs Information

711 Customs Examination of Mail Believed to Contain Dutiable or Prohibited Articles

711.1 What Is Subject to Examination

All mail originating outside the customs territory of the United States (i.e., outside the 50 states, the District of Columbia, and Puerto Rico) is subject to customs examination, except the following:

a. Mail addressed to ambassadors and ministers (chiefs of diplomatic missions) of foreign countries.

b. Letter mail known to contain or believed to contain only correspondence or documents addressed to diplomatic missions or to the officers of diplomatic missions; to international organizations designated by the president as public international organizations pursuant to the International Organizations Immunities Act; and other mail addressed to such international organizations pursuant to instructions issued by the U.S. Department of the Treasury.

c. Mail known to contain or believed to contain only official documents addressed to officials of the U.S. government.

d. Refer to ASM 274.94 for examination procedures to be followed for mail addressed for delivery in the Virgin Islands, American Samoa, the Northern Mariana Islands, Guam, and Puerto Rico.

711.2 Treatment of Mail Believed to Contain Dutiable or Prohibited Articles

711.21 Treatment at Exchange Offices

711.211 Submission to Customs Officers

Mail believed to contain articles liable to customs duty or prohibited articles is submitted immediately to a customs location as identified in 711.62, except when exchange offices are authorized to redispatch such mail to designated distribution offices for customs treatment.

711.212 Tag 10

Exchange offices that redispatch mail for submission to customs offices will attach Tag 10, *Supposed Liable to Customs Duty* (previously Label 81), to the label holders or hasps of sacks or pouches. Tag 10 is a reusable pink slotted tag, bearing the words *This sack contains mail supposed liable to customs duty.*

711.22 Treatment at Distribution Offices

711.221 Submission to Customs Officers

Distribution offices will submit mail believed to contain articles liable to customs duty or prohibited articles to customs officers as soon as possible after receipt.

711.222 Return of Tag 10

Quantities of reusable Tags 10 that have been removed from sacks containing such mail should be returned periodically. These tags should be sent to the postmaster at either New York, New Orleans, San Francisco, Seattle, or Miami, as appropriate from a geographic standpoint.

711.23 Priority Treatment of Airmail

Airmail items receive preferential customs treatment and are submitted to customs separately from surface mail. Upon return from customs, airmail items will be dispatched by air, if that can expedite delivery.

711.3 Examination of Registered Mail and Sealed Letters

The postmaster or other designated employee must be present when Registered Mail and sealed letters (except unregistered sealed letter mail bearing a green customs label) are opened by customs officers for examination. After customs treatment, the customs officer will repack and reseal the mail.

711.4 Extraction of Samples for Advisory Information

Should a customs officer wish to obtain advisory information from a local trade expert or from the Customs Information Exchange, permit him or her to extract a sample of the contents. The customs officer will furnish the Postal Service official with two copies of Customs Form 6423, *Notice of Damage, Shortage, or Samples Retained and Notice to Call for Samples* — one for enclosure in the package and the other for the Post Office files. If the sample is to be forwarded to New York, dispatch it under official registration to:

POSTMASTER
JAMES A FARLEY BLDG
US POSTAL SERVICE
421 8TH AVE
NEW YORK NY 10199-0998

for delivery to:

US CUSTOMS AND BORDER PROTECTION
ONE PENN PLZ 11TH FL
NEW YORK NY 10119-0002

711.5 Treatment of Mail Following Customs Examination

711.51 Repacking After Customs Examination

711.511 Responsibility of Customs and Postal Service Employees

Customs employees are responsible for repacking and resealing mail of foreign origin after customs examination. Postal Service employees accepting mail that has been in customs custody for examination must determine from external inspection whether the mail can safely bear further handling and transportation. Customs employees are responsible for restoring mail that is not in satisfactory condition.

711.512 Customs Shipments in Bad Order

Shipments found to be in bad order in transit or at the delivery office must be reconditioned by Postal Service employees. After reconditioning such mail, the employee should note, over his or her signature on the address side of the wrapper, the bad order and any evidence of damage or missing contents.

711.52 Identification of Dutiable/Nondutiable Articles

When U.S. Customs and Border Protection (CBP) determines that an inbound shipment is subject to duty payment by the addressee, the mailpiece is returned to the Postal Service bearing an orange adhesive-backed Treasury Department envelope, which contains CBP Form 3419ALT, *Mail Entry*. When U.S. Customs determines that an inbound shipment is not subject to duty payment by the addressee, the mailpiece is returned to the Postal Service with no Customs endorsement.

711.6 Handling Subsequent to Customs Inspection

711.61 Postal Service Handling Procedures

All foreign originating mailpieces that do not bear CBP Form 3419ALT are presumed to have been “cleared through customs” without duty being assessed. Accordingly, such articles should be processed for onward dispatch, without additional delay.

Note: U.S. Customs officers are no longer placing a diamond-shaped “passed free” stamp on inbound mailpieces that are found to be *nondutiable*.

711.62 U.S. Customs Service Locations

U.S. Customs officers at the locations noted in Exhibit 711.62 are authorized to perform the following tasks:

a. Inspect foreign-originating mailpieces that arrive through each designated port of entry.

b. Evaluate protests by addressees who are dissatisfied with the assessed value, rate, or amount of duty charged (see 713.23):

Exhibit 711.62
U.S. Customs Service Locations

State	Airport Location	Address
California	LAX (Los Angeles, CA)	US CUSTOMS SERVICE 20700 DENKER AVE TORRANCE CA 90501-6414
	SFO (San Francisco, CA)	US CUSTOMS SERVICE 660 WESTFIELD RD SAN FRANCISCO CA 94128-3101
Florida	MIA (Miami, FL)	US CUSTOMS SERVICE 11698 NW 25TH ST MIAMI FL 33112-3215
Hawaii	HNL (Honolulu, HI)	US CUSTOMS SERVICE 3599 NORTH NIMITZ HWY HONOLULU HI 96818-4415
Illinois	ORD (Chicago, IL)	US CUSTOMS SERVICE 514 EXPRESS CENTER DR CHICAGO IL 60688-2500
New Jersey	EWR (Newark, NJ) *Foreign Center NJ 099 Surface Facility*	US CUSTOMS SERVICE 80 COUNTY ROAD JERSEY CITY NJ 07097-9998
New York	JFK (New York, NY)	US CUSTOMS SERVICE JFK AIRPORT BUILDING 250 JAMAICA NY 11430-9998
Puerto Rico	SJU (San Juan, PR)	US CUSTOMS SERVICE LA PUNTILLA #1, OFFICE #214 SAN JUAN PR 00901-1822
U.S. Virgin Islands	STT (Saint Thomas, VI)	US CUSTOMS SERVICE RON DE LUGO FEDERAL BUILDING AND COURTHOUSE 5500 VETERANS DR RM 248 ST THOMAS VI 00802-6424
Washington	SEA (Seattle, WA)	US CUSTOMS SERVICE 16601 AIR CARGO RD SEATTLE WA 98158-9998

712 Customs Clearance and Delivery Fee

712.1 Description

712.11 Collecting Postal Service Fees

Post Office facilities must collect a Postal Service fee from the addressee for each item on which customs duty or Internal Revenue tax is collected. The Postal Service fee is authorized by international postal agreements to reimburse the Postal Service for costs it incurs clearing items through customs and collecting customs duties at the time of delivery.

712.12 Collecting Postal Service Fee for Each Package

The Postal Service collects the fee on each package bearing CBP Form 3419ALT. When a single mail entry form covers several packages, the Postal Service collects the fee only on the package bearing CBP Form 3419ALT. The CBP Form 3419ALT is enclosed in an orange adhesive-backed Treasury Department envelope attached to the outside wrapper or

envelope. The form indicates the tariff item number, rate of duty, and amount of duty to be collected plus a customs processing fee, which is assessed on all dutiable mail shipments.

712.13 Accounting for the Postal Service Fee

The Postal Service fee, which is retained by the U.S. Postal Service, is accounted for by using the procedures in Handbook F-101, *Field Accounting Procedures*, subchapter 7-2.

712.2 Articles Exempted From Postal Service Fee

Post Office facilities will not collect a Postal Service fee for customs clearance and delivery in the following cases:

a. On dutiable articles from overseas U.S. Post Office facilities (civil or military).

b. On parcels assessed with duty that are delivered without collection of duty under 713.233e.

c. On mail items examined and passed free of duty by U.S. Customs.

712.3 Amount of Postal Service Fee

See Notice 123, *Price List,* for the Postal Service fee for customs clearance and delivery for each dutiable item.

712.4 Postal Service Fee Not Refundable

The Postal Service fee for customs clearance and delivery is not refundable by the U.S. Postal Service even though the U.S. Customs Service may later refund the duty paid by the addressee.

712.5 Customs Duties and Customs Fee Not Exempt

The exemptions provided for in 712.2 apply only to the Postal Service fee for Customs clearance and delivery. Customs duties and customs fees are not exempt from collection.

713 Treatment of DutiMable Mail at Delivery Office

713.1 Detection and Dispatch of Dutiable Mail

713.11 Detecting Dutiable Items

Postal Service employees will promptly examine all inbound mail to detect dutiable items. Dutiable mail will bear the “Original” and “Addressee Receipt” copies of CBP Form 3419ALT, which is enclosed in an orange adhesive-backed Treasury Department envelope attached to the wrapper or envelope.

713.12 Dispatch to Delivery Units

Dutiable mail will be forwarded promptly to delivery units.

713.2 Delivery of Dutiable Mail

713.21 Delivery Methods

713.211 By Whom Delivered

Dutiable mail will be delivered by city and rural carriers and by window delivery units.

713.212 PS Form 3849, Delivery Notice/Reminder/Receipt

PS Form 3849, *Delivery Notice/Reminder/Receipt,* is used to notify addressees of the arrival of dutiable mail.

713.22 Delivery Procedures

713.221 Charging Delivery Employee

Charge mail and both copies of CBP Form 3419ALT (see 713.11) to the delivery employee on PS Form 2944, *Receipt for Customs Duty Mail*, prepared in duplicate. For control and auditing purposes, enter on PS Form 2944 the mail entry numbers as shown on CBP Form 3419ALT. Retain both copies of PS Form 2944 at the Post Office facility as a record of the employee's accountability.

713.222 Addressee's Examination of Dutiable Mail

Addressees are not permitted to examine the contents of dutiable mail until the duty has been paid.

713.223 Signing Customs Entry Forms

When customs charges are collected and delivery is made, the delivery employee will follow this procedure:

a. Obtain the addressee's signature and date of delivery on the "Original" copy of CBP Form 3419ALT, as well as on PS Form 3849.

b. If appropriate, the delivery employee will scan/enter the mailpiece barcode and enter the corresponding event code in the handheld or POS ONE scanner.

c. Sign and date the "Addressee Receipt" copy of CBP Form 3419ALT and give it to the addressee as a receipt for the duty paid.

d. Turn in the amount collected with the signed "Original" copy of CBP Form 3419ALT and signed PS Form 3849. Turn in any undelivered mail with both copies of CBP Form 3419ALT.

713.224 Clearing Delivery Employee

a. *Post Office facilities with 950 or more revenue units.* The carrier's accountability will be cleared by a clearing clerk, who will complete both copies of PS Form 2944, prepared pursuant to 713.221, and give them to the carrier. The carrier will deposit the original copy of the form in the slotted and locked receptacle provided for that purpose and file the duplicate copy, which he or she will retain for 3 months after the last day of the month of issue. The original copies of PS Form 2944 can only be removed from the locked receptacle by a supervisor or employee other than the clearing clerk, and must be forwarded daily to the chief accountant or other designated employee. Employees at delivery windows who have been charged with dutiable mail will be similarly cleared but, in addition, will be required to execute a new

PS Form 2944 covering all dutiable mail remaining in their custody at the close of business.

b. *At other Post Office facilities.* The delivery employee's accountability will be cleared in the same manner as for domestic COD transactions.

c. *PS Forms 3849.* Electronic record management sites will dispatch all signed PS Forms 3849 with mail to be forwarded via pouch to the Computerized Forwarding System (CFS) site serving that office. Manual record management sites will file PS Forms 3849 in the consolidated file by the last two digits of the article number.

713.23 Addressee Protests Duty Charged

713.231 Alternatives Available to Addressee

When an addressee objects to the assessed value, rate, or amount of duty charged, the following alternatives are available:

a. Addressee may take delivery, pay the duty and postal fees, and protest (within 90 days from the date duty is paid) directly to the issuing customs port.

b. Addressee may definitely refuse the mail if he or she does not wish to pay the duty or to protest the duty assessment.

c. Addressee may conditionally refuse the mail pending review of the entry by the U.S. Customs Service.

Note: Postal Service procedures for alternatives (b) and (c) are described in 713.232 and 713.233.

713.232 Definite Refusal of Dutiable Mail

If the addressee elects alternative (b) in 713.231, the delivery employee will make it clear to the addressee that the mail will be disposed of immediately as undeliverable. Then the delivery employee will mark the mail *Refused,* and date and initial it. If appropriate, the delivery employee will scan/enter the mailpiece barcode and enter the corresponding event code in the handheld or POS ONE scanner. Then the delivery employee will return the mailpiece with both copies of CBP Form 3419ALT (see 713.11) to the Post Office facility for disposal (see 713.51).

713.233 Conditional Refusal of Dutiable Mail

If the addressee elects alternative (c) in 713.231, the Postal Service procedure is as follows:

a. Delivery employee will advise addressee to submit his or her protest in writing to the postmaster. It should be accompanied by any evidence the addressee may have that will substantiate the claim (i.e., invoice, declaration of value, etc.). The addressee should also provide the CBP Form 3419ALT and any other particulars that will assist in relating the protest to a specific item of mail at the Post Office facility.

b. Delivery employee will mark the mail "ADDRESSEE PROTESTS DUTY," date and initial the notation, and return the mail with both copies of CBP Form 3419ALT to the Post Office facility to await receipt of the addressee's written protest.

c. If the addressee's written protest is not received *within 5 days* after the mail has been returned to the Post Office facility, notify the addressee that the mail is on hand and will be held for only 5 more days. Mark the mail "NOTIFIED" and date it. If the addressee does not furnish the required statement within another week, endorse the mail "UNCLAIMED," and date and treat it as prescribed in 713.3 or 713.5, as appropriate.

d. On receipt of the addressee's written protest, the Post Office facility will promptly:

(1) Prepare report, in duplicate, on PS Form 2937, *Importer's Objections.*

(2) Forward original of PS Form 2937, with supporting statements and both copies of CBP Form 3419ALT, to the customs mail division where CBP Form 3419ALT was prepared, unless the addressee is located in the vicinity of one of the customs offices listed in 711.62. In the latter case, the original of PS Form 2937, both copies of CBP Form 3419ALT, and the other documents may be sent to the local customs office for consideration of the protest.

(3) Retain the mail with the duplicate of PS Form 2937 and await the decision of the customs office. If the customs office requests that the mail be submitted for inspection, it should be forwarded immediately.

e. If an adjustment is made by the customs officer, he or she will endorse the adjustment on both copies of CBP Form 3419ALT and return them with the original of PS Form 2937 to the postmaster. When the package is delivered, the delivery employee will collect and report the corrected amount of duty and handle as prescribed in 713.46. If the adjusting customs officer waives the duty, the mail will be reported as an uncollected item, as prescribed in 713.52.

f. If no decision on a protest is received from the customs office within 30 days, request that the matter be expedited. Continue to hold the mail until a decision is received.

g. Whenever applicable during this process, the mailpiece barcode should be scanned/entered and the corresponding event code entered in the handheld or POS ONE scanner.

713.3 Forwarding or Returning Dutiable Mail

713.31 Forwarding Dutiable Mail Within the U.S.

713.311 Procedures

Forward dutiable mail as prescribed in 764.1. Allow CBP Form 3419ALT to remain attached to the redirected mail in its original envelope, which is also redirected to the new address.

713.312 PS Form 3849, Delivery Notice/Reminder/Receipt

a. *Manual Record Management Sites:* Prepare PS Form 3849 to show the name and address of the addressee, forwarding address, and name of port where the duty was assessed.

b. *Electronic Record Management Sites:* Scan/enter the mailpiece barcode and enter the corresponding event code in the handheld scanner.

713.313 **Disposition of PS Form 3849**

a. *Manual Record Management Sites:* File PS Form 3849 with other delivery records.

b. *Electronic Record Management Sites:* Send delivery receipts to the appropriate Computerized Forwarding System (CFS) unit.

713.32 Forwarding Dutiable Mail to Another Country

713.321 **CBP Form 3419ALT**

When dutiable mail is entitled to be forwarded to another country, detach both copies of CBP Form 3419ALT, endorse them "ADDRESSEE MOVED OUTSIDE JURISDICTION OF THE UNITED STATES," and report the mail as an uncollected item, as prescribed in 713.52. If applicable, scan/enter the mailpiece barcode and enter the corresponding event code in the handheld scanner.

713.322 **Procedures**

See 764.2 concerning procedures for forwarding mail.

713.33 Returning Dutiable Mail to Sender

713.331 **CBP Form 3419ALT**

When dutiable mail is to be returned to the sender, detach both copies of CBP Form 3419ALT; endorse them "REFUSED," "UNCLAIMED," etc.; and report the mail as an uncollected item as prescribed in 713.52. If applicable, scan/enter the mailpiece barcode and enter the corresponding event code in the handheld scanner.

713.332 **Procedures**

See 772 for procedures for returning mail.

713.34 Forwarding or Returning Dutiable Mail by Stations and Branches

Postmasters may authorize stations and branches to forward or return mail directly from those units, without sending the mail to the main office.

713.4 Payment of Duty

713.41 Duty Rate Information

Customers desiring information concerning rates of duty or other customs procedures should communicate directly with the nearest customs office (see 711.62) or with:

US CUSTOMS AND BORDER PROTECTION
OFFICE OF THE COMMISSIONER
DEPARTMENT OF HOMELAND SECURITY
1300 PENNSYLVANIA AVENUE SW
WASHINGTON DC 20229-0001

713.42 Prepayment of Customs Duty Abroad

No provision is made for the prepayment abroad of customs duty on mail shipments addressed for delivery in the United States.

713.43 Registration of Items to Be Returned to the United States

713.431 Customs Form 4455, Certificate of Registration

Before sending an item abroad for alterations, repairs, use, or replacement, the owner should submit it to a customs officer for issuance of a *Certificate of Registration* (Customs Form 4455). Otherwise, the package may be subject to a customs duty when it is returned to the United States.

713.432 Certification by Postal Service Personnel

Due to the lack of customs offices in many parts of the country, customers often are unable to have items registered with the U.S. Customs Service before sending them abroad, or are able to do so only after considerable expense and inconvenience. As a service to Postal Service customers, postmasters — or employees they designate — may certify the exportation of items mailed abroad for alteration, repair, use, or replacement under the following conditions:

a. The customer must live more than 20 miles from a customs office. In addition to those listed in 711.62, there are a number of other customs locations throughout the country. A customer who lives within 20 miles of any customs office must have the item certified by a customs officer.

b. The customer must present the items to be exported in an open state. The package must be accompanied by an original and duplicate copy of Customs Form 4455, which is completed and signed by the sender, and a customs declaration form(s) appropriate to the class of mail. (See 123 for declaration requirements.) Customers may obtain Customs Form 4455 from any customs office.

c. The postmaster or designated Postal Service employee must check to see that the description of the item to be exported is the same on both Customs Form 4455 and the customs declaration form. If the description is the same, he or she certifies to the mailing (lading) by completing the "Signature of Customs Officer" space on both copies of Customs Form 4455. A Certificate of Mailing fee (see Notice 123, *Price List)* must be charged and accounted for by affixing postage stamps to the original and duplicate copies of Customs Form 4455 and canceling each stamp with the Post Office date stamp.

d. Both copies of Customs Form 4455 must be returned to the customer. The customer must insert the original in the package so that the foreign addressee can return it with the merchandise. The customer should retain the duplicate for possible use in clearing the merchandise upon its return.

e. After the customer has inserted the original Customs Form 4455, he or she must secure and seal the package and return it to the acceptance employee, who will handle it in the usual manner.

713.44 Return of Audio-Visual Materials

Customs Form 3311, *Declaration for Free Entry of Returned American Products and/or Certificates of Exportation,* should accompany outbound shipments of educational films sent to foreign addressees on a loan or rental basis. By enclosing Customs Form 3311, the mailer is indicating that the contents of the shipment are eligible for duty-free handling and classification upon reentry into the United States. This procedure is applicable to shipments of educational films valued at $250 or less, which have been produced in the United States and are returned through the mail by foreign consignees. Customs Form 3311 can be obtained at any Customs Service office.

713.45 Assessment of Duty in Foreign Countries

The assessment of customs duty in foreign countries is outside the control of the U.S. Postal Service. Postal Service employees must not attempt to inform customers whether any items — either gifts or commercial shipments — will be subject to customs duty. It may be suggested to customers, however, that they inform the addressee before they mail so that the latter may determine whether those items are dutiable. No provision is made for prepayment of customs duty on mail addressed for delivery in foreign countries.

713.46 Recording and Reporting Collections

Post Office facilities making delivery/collection of dutiable mail must follow the recording and reporting procedures in Handbook F-101, *Field Accounting Procedures*, subchapter 7-2.

713.5 Treatment of Uncollected Items

713.51 Disposal of Uncollected Items

When it is definitely established that a dutiable package is undeliverable, detach both copies of CBP Form 3419ALT (see 713.11) and treat the package as prescribed in 770. Mark the mail entry forms to show the reason for nondelivery, and report as prescribed in 713.52.

713.52 Reporting of Uncollected Items

713.521 PS Form 2933, Register of Uncollected Customs Charges

Complete PS Form 2933, *Register of Uncollected Customs Charges,* in duplicate, listing uncollected items in numerical order according to the seven-digit serial number on CBP Form 3419ALT.

713.522 Disposition of PS Form 2933

Forward the original PS Form 2933, with both copies of CBP Form 3419ALT, to the following address:

US CUSTOMS AND BORDER PROTECTION
MAIL ENTRY
6650 TELECOM DR STE 100
INDIANAPOLIS IN 46278-0001

If supporting Customs Form 3342, *Declaration for Free Entry of Gifts and/or Authorization to Postmaster to Deliver Mail Importation Conditional Free of Duty,* or other statements are necessary, they must be forwarded with the original PS Form 2933 and copies of the CBP Form 3419ALT to the Regional Commissioner of Customs.

713.523 **Filing of PS Form 2933, Register of Uncollected Customs Charges**

File duplicate PS Form 2933 for reference purposes.

713.524 **Reports**

Prepare reports as needed, but not less frequently than weekly.

713.53 Past-Due Entries

When the U.S. Customs Service fails to receive a remittance of duty or a report of disposition made of a dutiable package, the postmaster will receive a set of reproduced copies of CBP Form 3419ALT. In this circumstance, a search should be made at the Post Office of address and a report of its findings made to the Regional Commissioner of Customs at the address shown in 713.522.

713.54 Detached Customs Mail Entries

When a detached CBP Form 3419ALT is found, attempt to locate the related package and attach the form to it. If the package cannot be located, send CBP Form 3419ALT to the following address:

US CUSTOMS AND BORDER PROTECTION
MAIL ENTRY
6650 TELECOM DR STE 100
INDIANAPOLIS IN 46278-0001

713.6 Refund of Customs Duty

713.61 Action by Postmaster

713.611 **General**

Amounts collected on CBP Form 3419ALT are *not* refundable by postmasters. An addressee who requests a refund of duty should be advised to make application to the customs office that issued the mail entry forms *within 90 days* from the date the duty is paid. If a refund is claimed for damage, it is suggested that the package be forwarded with the application. Any addressee wishing to abandon the package to the government should so state in the application.

713.612 **Addressee's Request for Refund**

If the addressee wishes to request a refund of duty from the Customs Service and intends to file an indemnity claim with the Postal Service, he or she must present the contents, container, and complete wrapping to the postmaster for the inspection in conjunction with the preparation of PS Form 1000, *Domestic or International Claim.* Following this inspection, the postmaster accepting the claim will provide the claimant with a statement to the effect that:

a. The Postal Service has accepted the damage claim and has received the abandoned merchandise;

b. The package and its wrapper and contents with no commercial value have been presented to and retained by the Postal Service; and

c. The documents, including the customer's yellow receipt copy of CBP Form 3419ALT, indicated that customs duty in the stated amount was paid by the customer.

Note: This statement, which is to be provided to the customer by the postmaster, is to accompany the customer's application to the Customs Service for refund of duty. If this statement accompanies the application, the presentation of the abandoned articles is not required by the Customs Service.

713.62 Refunds by Customs Service

713.621 Refund of Duty on Abandoned Merchandise

A request for refund of duty paid will be considered by the Customs Service when merchandise covered by CBP Form 3419ALT is abandoned, provided:

a. The abandoned merchandise represents five percent or more of the total value of all merchandise of the same class or kind entered in the invoice in which the item appears.

b. The abandoned merchandise is delivered to the customs office where the CBP Form 3419ALT was issued within 90 days of the date of delivery (unless the Secretary of the Treasury authorizes a longer time in writing).

713.622 Refund of Duty on Returned Merchandise

The refund of duty paid "less 1 percent" will be considered by the Customs Service when merchandise covered by CBP Form 3419ALT is returned, provided:

a. The returned merchandise does not conform to the sample or specification, or has been shipped without the consent of the consignee.

b. The returned merchandise is delivered to Customs Service custody for exportation within 90 days of the date of delivery (unless the Secretary of the Treasury authorizes a longer time in writing).

Note: The addressee must pay the postal charges incident to returning the merchandise to the sender.

713.623 Refund of Duty on Goods Lost En Route

The Customs Service will not refund the duty paid when goods are lost en route after an addressee has paid the customs duty at the Post Office facility and requested that delivery be made at his or her residence or place of business. In addition, the Postal Service does not make any refunds of customs duty.

713.624 Refund of Duty as Drawback on Exported Merchandise

See 580 for drawback arrangements.

720 Plant and Animal Quarantine Inspection

721 What Is Subject to Inspection

All packages that contain plants, plant products, soil, plant pests, plant material used for packing, animals, and animal products and byproducts, including meats, are subject to agricultural quarantine inspection by the U.S. Department of Agriculture (see DMM 601).

722 Segregation and Handling

722.1 Treatment of Packages Labeled for Inspection

722.11 Dispatch of Packages

Dispatch packages bearing green and yellow or red and white address labels to the Agriculture Department inspection points shown on the labels.

722.12 Marking

After the packages are inspected and cleared, they will be stamped "RELEASED" or "TREATED AND RELEASED," redirected to the addressees, and returned to the mail for delivery.

722.2 Treatment of Packages Exempt From Inspection

Undamaged packages bearing the Agriculture Department label *Importation Authorized* should be forwarded directly to the Post Office of address. If packages bearing this label are damaged, recondition them if necessary, and forward for agricultural inspection as prescribed in 722.3.

722.3 Treatment of Unauthorized Importations

Mark "FOR AGRICULTURAL QUARANTINE INSPECTION" on packages containing the articles listed in 721 but not bearing any Agriculture Department labels or inspection stamps. Forward them under seal to the postmaster at the most accessible location listed in 723.

722.4 Packages Containing Prohibited Material

Upon inspection, packages found to contain prohibited agricultural material are either (1) released for delivery after removal of the prohibited contents and insertion of a notice by the inspector, or (2) marked "REFUSED ENTRY" (or a similar notation) and returned to origin.

723 Agriculture Inspection Stations and Offices

Inspectors of the Plant Protection and Quarantine Programs, U.S. Department of Agriculture, are stationed at the following locations:

Agana, GU	Fort Lauderdale, FL	Portland, ME
Anchorage, AK	Galveston, TX	Portland, OR
Astoria, OR	Hidalgo, TX	Presidio, TX
Atlanta, GA	Hilo, HI	Progreso, TX
Baltimore, MD	*Hoboken, NJ	Roma, TX
Bangor, ME	*Honolulu, HI	Rouses Point, NY
Baton Rouge, LA	Houston, TX	St. Louis, MO
Blaine, WA	Jacksonville, FL	St. Paul, MN
Boston, MA	*Jamaica, NY (JFK Airport)	San Antonio, TX
*Brownsville, TX	Kansas City, MO	*San Diego, CA
Buffalo, NY	Key West, FL	*San Francisco, CA
Calexico, CA	*Laredo, TX	*San Juan, PR
Charleston, SC	*Los Angeles, CA	Savannah, GA
Charlotte Amalie, VI	Memphis, TN	*Seattle, WA
Chicago, IL	*Miami, FL	Tacoma, WA (McChord AFB)
Christiansted, VI	Milwaukee, WI	Tampa, FL
Cleveland, OH	Mobile, AL	Toledo, OH
Coos Bay, OR	Morehead City, NC	Tucson, AZ
Corpus Christi, TX	*New Orleans, LA	Wallingford, CT
Dallas, TX	Newport News, VA	Warwick, RI
Del Rio, TX	New York, NY	Washington, DC
Denver, CO	*Nogales, AZ	*West Palm Beach, FL
Detroit, MI	Norfolk, VA	Wilmington, DE
Dover AFB, DE	Pensacola, FL	Wilmington, NC
Duluth, MN	Philadelphia, PA	Wrightstown, NJ (McGuire AFB)
Eagle Pass, TX	Phoenix, AZ	
*El Paso, TX	Port Arthur, TX	
Fairfield, CA (Travis AFB)	Port Canaveral, FL	

**Inspection Stations.*

730 Shortpaid Mail to the United States

731 Computation of Postage Due

a. The postal service of the country of origin identifies and marks shortpaid mail with a T stamp. Next to the T is a fraction that consists of the amount of postage deficiency (expressed in its own currency) divided by the country's international surface letter price at the first increment.

b. The receiving exchange office in the United States multiplies the T fraction by the U.S. First-Class Mail International letter price to determine the short paid amount in U.S. currency. This amount, plus a $0.50 handling charge, accounts for the postage-due amount to be collected on delivery. The postage-due formula is as follows:

$$T \frac{\text{shortpaid amount}}{\text{International letter price of postage to U.S.}} \times \text{First-Class Mail International price}$$

= Postage deficiency in U.S. currency

+ $0.50 handling charge

= Postage due amount

c. The receiving exchange office in the U.S. will imprint stock rubber stamp R-1300-4, *Postage Due…Cents,* and enter the amount of postage due.

d. The delivery office will collect postage-due mail in accordance with DMM 604 and Handbook F-1, *Post Office Accounting Procedures.*

732 Shortpaid Letters and Cards From Canada

Shortpaid mail from Canada is marked with a T in a circle with the actual amount to be collected entered in the circle. No handling charge is assessed or collected on shortpaid mail from Canada.

733 Shortpaid Items Bearing U.S. Postage

If an item bears U.S. postage, the delivery office must allow credit for its value when postage due is collected.

740 Irregular Mail

741 Invalid Foreign Postage

A foreign originating mailpiece, which bears invalid postage and is accompanied by a letter of explanation from the origin postal administration, is to be rated as an unpaid postal item. Under those circumstances, the addressee should be asked to (1) pay the requisite postage due; (2) disclose the sender's name and address; and (3) surrender the envelope. After the mailpiece has been tendered to the addressee, the delivery Post Office facility should send the envelope (or the entire article, if refused by the addressee) with the letter of explanation and the sender's name and address (if disclosed by the addressee) to:

MANAGER INTERNATIONAL MARKETING
INTERNATIONAL BUSINESS
US POSTAL SERVICE
475 L'ENFANT PLZ SW RM 3216
WASHINGTON DC 20260-3216

742 Stamps Not Affixed

742.1 Marking

Some items of foreign origin do not bear postage stamps, but instead are marked “POSTAGE PAID,” “ON POSTAL SERVICE,” “SERVICE DES POSTES,” “TAXE PERCUE” or “TP,” or “PORT PAYE” or “PP,” followed by postmark. The marking *On Her Majesty’s Service* or *O.H.M.S.* is also sometimes used. Treat this mail as prepaid.

742.2 Parcels Without Postage Stamps

Some foreign post offices do not put postage stamps on parcels. All such parcels received must be regarded as prepaid.

743 Parcels Addressed Through Banks or Other Organizations

743.1 Notification of Arrival

If a parcel is addressed to a bank or other organization for delivery to a second addressee, the Post Office facility will notify both addressees of the arrival of the parcel and will then deliver it to the first addressee, or hold it if the first addressee so requests. If the parcel is held, the Post Office facility will deliver it to the second address only with written permission from the first addressee, unless the sender has arranged for a change of address. If delivery to the second addressee involves forwarding the parcel to another Post Office facility, the parcel will be subject to forwarding postage as provided in 764.13. In all cases, electronic record management sites will scan/enter the mailpiece barcode and enter the corresponding event code in the handheld scanner.

743.2 Filing Authorization

After delivery to the second addressee, the Post Office facility will keep the first addressee’s written authorization for 1 year, in case of inquiry. Authorizations will be filed as follows:

a. For insured parcels: with addressees’ receipts.

b. For uninsured parcels: in any appropriate place.

744 Foreign Dispatch Notes

744.1 Delivery Instructions

If parcels are received at delivery offices with dispatch notes *(bulletin d’expedition)* attached, deliver these notes with the parcels. Although dispatch notes have a space provided for the addressee’s acknowledgment of receipt, they do not require signature. They must not be confused with foreign return receipts *(avis de reception),* which are completed as prescribed in 753.1.

744.2 Undeliverable Parcels

If a parcel is returned as undeliverable, the Post Office facility will mark the dispatch note as well as the wrapper to show the reason for nondelivery and leave the dispatch note attached to the parcel.

744.3 Dispatch Notes Not Associated With Parcels

Dispatch notes that cannot be associated with accompanying parcels may be disposed of as waste.

750 Extra Services

751 Insured Parcels

751.1 Identification

751.11 Evidence of Insurance

A number on a parcel is not sufficient evidence of insurance. An insurance endorsement is also required.

751.12 List of Insurance Endorsements

The following are insurance endorsements that may appear on inbound insured parcels, depending on the language of the country of origin.

a. *Insured*.

b. *Asegurado* or *Valor Declarado*.

c. *Assicurato* or *Valor Dichiarato.*

d. *VD* or *Valeur Declaree*.

e. *Wertangabe* or *Wertpaket*.

751.2 Delivery

Deliver international insured parcels in accordance with DMM 503 and POM 814.2.

751.3 Indemnity Claims and Payments

For detailed information concerning indemnity claims and payments for loss, damage, or missing contents for insured parcels, see 930.

752 Registered Mail

752.1 Identification

752.11 Evidence of Registration

A number on an item of mail is not sufficient evidence of registration. A registry endorsement is also required.

752.12 List of Registry Endorsements

The following are registry endorsements that may appear on Registered Mail items, depending on the language of the country of origin.

a. *Certificado*.

b. *Einschreiben*.

c. *R* or *Registered.*

d. Raccomandata.

e. *Recommande*.

f. *Registo* or *Registrado*.

752.13 Treatment of Registered Items

All mail registered by the country of origin must be handled in the domestic First-Class Mail mailstream from the exchange office to the office of delivery. A signed delivery receipt must be obtained at the time of delivery.

752.14 Treated as Ordinary Mail

Any item without evidence of formal registration must be treated as ordinary mail. A sender's registry endorsement on such articles must be crossed out.

752.2 Treatment by Office of Delivery

752.21 Delivery

Record and deliver in accordance with DMM 503 and POM 812.4.

752.22 Mail Unaccounted for After Assignment for Delivery

752.221 General

When a Registered Mail item assigned for delivery is not properly accounted for, make a record of the available facts concerning the item and file the report, pending a possible inquiry.

752.222 Inquiries

If an inquiry is received from the sender (see 920), ask the addressee whether the item was received. If the item was not received, make a full report promptly to the appropriate Postal Service inspector-in-charge.

752.23 Indemnity Claims and Payments

For detailed information concerning indemnity claims and payments for loss, damage, or missing contents for Registered Mail items, see 930.

753 Return Receipt

753.1 Completion of Return Receipt Form

Inbound registered or insured mail for which the sender requests advice or confirmation of delivery will be endorsed with the words "AVIS DE RECEPTION" or with the letters "A.R.," and be accompanied by a light red or pink card similar to PS Form 2865, *Return Receipt for International Mail.* The office of delivery must complete the receipt as follows:

a. Have the addressee or an authorized agent date and sign the receipt with *ink*. When signed by an agent of the addressee, have the agent sign the addressee's name, followed by his or her own signature.

b. Postmark the receipt in the appropriate spaces on both sides.

c. Endorse the completed receipt “AIRMAIL” and dispatch it as unregistered mail.

753.2 Foreign Receipt Form Missing

When inbound registered or insured mail is marked *A.R.* or bears the notation *Avis de Reception* but is not accompanied by a receipt form, the delivery office must complete and attach a pink PS Form 2865.

754 Restricted Delivery

754.1 Inbound Registered Mail

An inbound Registered Mail item, accompanied by a return receipt and bearing the notation *A Remettre en Main Propre* or Restricted Delivery, should be delivered only to the addressee or their authorized agent.

754.2 Failed Delivery Attempt

Failing delivery on the first attempt, a second attempt must be made to deliver this mail if it is likely this attempt will be successful. If appropriate, scan/enter the mailpiece barcode and enter the corresponding event code in the handheld scanner. See 770 for the treatment of undeliverable inbound mail.

760 Forwarding

761 General Procedures

761.1 Items Addressed to Foreign Countries

Items addressed to foreign countries generally will be forwarded to a new address of the addressee in the country of destination, subject to collection of redirection charges prescribed by the internal regulations of the country.

761.2 Forwarding to a Third Country

The original destination country may forward an item to a third country if the item complies with the conditions required for its further conveyance, and the extra postage is paid at the time of redirection or the original destination country is satisfied that it will be able to recover the redirection charges.

761.3 Endorsement Not to Forward

The sender may forbid any forwarding by placing an endorsement to that effect on the wrapper in a language understood in the country of destination.

761.4 Scanning Procedures

Forwarded items should be scanned/entered into the handheld scanner along with the corresponding event code.

762 Mail of Domestic Origin

762.1 Addressee Moved to Another Country

762.11 Letters and Postcards

Postcards and unregistered letters that do not appear to contain merchandise and do not bear a notice forbidding forwarding may be redirected to the original addressee in another country. Letters and cards are forwarded without prepayment of additional postage.

762.12 Mail Other Than Letters and Postcards

Domestic mail (Periodicals Mail, Standard Mail, and Package Services) addressed to a domestic addressee who has moved to another country must not be forwarded to another country but must be returned to the sender. Domestic mail that cannot be returned to the sender because of an incorrect, incomplete, illegible, or missing return address must be treated as dead mail and disposed of as provided in DMM 507. (See 762.2 for items bearing foreign return address.)

762.2 Undeliverable Domestic Mail Bearing U.S. Postage and a Foreign Return Address

Handle an undeliverable domestic mailpiece that is addressed to a U.S. addressee and that bears a foreign return address based on its class and size and shape, as noted below:

a. A domestic postcard: Return to the foreign address.

b. A domestic letter-size or flat-size mailpiece that does *not* appear to contain merchandise: Return to the foreign address.

c. A domestic Registered Mail mailpiece that does *not* appear to contain merchandise: Return to the foreign address. In case of loss of a Registered Mail letter after dispatch from the United States, the mailer agrees to the indemnity payment provisions of 934.2, regardless of the amount of registry fee paid.

d. A domestic Certified Mail letter-size or flat-size mailpiece that does *not* appear to contain merchandise: Return to the foreign address.

e. Regardless of mail class, a domestic parcel-size mailpiece or any domestic mailpiece that appears to contain merchandise: Hold at the Post Office of the addressee. While holding the piece, the Post Office submits a request for instructions to International Claims, St. Louis ASC, P.O. Box 80146, St. Louis, MO 63180-0146. The request must include the following information:

   (1) The names and addresses of the sender and the addressee.

   (2) The weight of the item and any extra services.

   (3) The nature and value of contents if known.

The International Claims Office will contact the sender for disposition instructions, completion of the required customs forms, and payment of additional postage.

763 Items Mailed Aboard Ships (Paquebot)

763.1 General

Mail posted aboard commercial vessels on the high seas may bear postage stamps of the country whose flag the vessel flies. On arrival at a port, an officer of the ship must give the mail to the post office of the foreign city. That post office must cancel the stamps and dispatch the items. If the stamps are foreign, the Post Office facility must use a special *Paquebot* postmark or apply the word "PAQUEBOT" to the envelope in ink or with a rubber stamp.

763.2 Mail Forwarded by Air

Mail to be forwarded by air must be accompanied by International Form CN 65, *Bill. Weight of Airmail Items* (formerly AV-2) (similar to PS Form 2710, *Statement of Net Weight of the Airmail),* prepared by the ship's officer, showing the weight of the items for each destination, including the United States. The receiving Post Office facility must postmark Form CN 65 in the lower right section titled "Timbre du bureau destinataire." When airmail is presented at a Post Office facility that is not an international airmail exchange office, the postmaster must transmit the Form CN 65 to the nearest installation listed below:

INTERNATIONAL RECORDS UNIT
US POSTAL SERVICE
BUILDING 250
JOHN F KENNEDY INTERNATIONAL AIRPORT
JAMAICA NY 11430-9506

INTERNATIONAL RECORDS UNIT
US POSTAL SERVICE
11690 NW 25TH ST
MIAMI FL 33172-1702

INTERNATIONAL RECORDS UNIT
US POSTAL SERVICE
ROOM 216
2850 BAYSHORE BLVD
DALY CITY CA 94013-0015

763.3 Mail Posted on a U.S. Ship

Mail posted aboard a U.S. ship on the high seas, or aboard any ship while in a U.S. port, must bear U.S. stamps and is *not* entitled to *Paquebot* cancellation at a U.S. Post Office facility.

763.4 Forwarding Ship Passenger and Crew Mail

763.41 Items That Do Not Contain Merchandise

As an alternative to 762 and 764, unregistered items or correspondence that does not contain merchandise addressed to crew members or passengers on board a ship may be forwarded in the international mail, by surface or air, in one forwarding envelope addressed to a ship or travel agency under the following conditions:

a. The forwarding envelope in which the items are forwarded should measure approximately 6 x 9 inches and be supplied by the sender. Do

not put postage on forwarding envelope, but place the following endorsement in the upper right corner: "THIS ENVELOPE CONTAINS PREPAID LETTERS FORWARDED IN BULK BY AUTHORITY OF THE VICE PRESIDENT, INTERNATIONAL BUSINESS, U.S. POSTAL SERVICE. ANY REQUIRED ADDITIONAL INTERNATIONAL POSTAGE HAS BEEN AFFIXED TO THE ARTICLES ENDORSED."

b. The forwarding envelope must be presented unsealed at the mailing office for a check of its contents. Any additional postage required must be paid on each of the articles enclosed, as follows:

(1) *Articles of U.S. origin*. Pay on each article the difference between the postage already paid and the appropriate international price to the new country of destination.

(2) *Articles originating in other countries*. Affix full air postage from the United States to the new country of destination on each article enclosed.

c. Place Label 19-A or Label 19-B in the upper left corner of the envelope immediately below the return address of the sender.

d. The total weight of the forwarding envelope and its contents is limited to 18 ounces.

763.42 Accepting Employee's Responsibility

The accepting employee must check the envelope to see that any required additional postage has been purchased, affixed, and canceled, and then seal the envelope. The accepting employee must also apply the office date stamp and his or her initials immediately below the sender's endorsement prescribed in 763.41a.

764 Mail of Foreign Origin

764.1 Forwarding Within the United States

764.11 Mail Other Than Periodicals and Parcels

Except for periodicals and parcels, items received by surface may be forwarded within the United States by surface and items received by air may be forwarded within the United States by air without an additional postage charge or fee, unless there is a notation forbidding their being forwarded.

764.12 Periodicals

764.121 Periodicals from Canada

Periodicals Mail publications *from Canada* are forwarded in the same manner as domestic Periodicals Mail (see DMM 507).

764.122 Periodicals from Other Countries

Periodicals from *all other countries* will be forwarded, at no charge, for 60 days from the effective date of the change-of-address order. If the periodical is received after the 60-day forwarding period, the Post Office facility of original destination address must handle it as follows:

a. If it bears the sender's request for return, it must be endorsed "MOVED, NOT FORWARDABLE," and returned to origin.

b. All other periodicals and any subsequent copies received must be disposed of as waste.

c. At no time will an address correction notice be provided to the mailer.

764.13 Parcels

764.131 Surface

a. A parcel may be forwarded to the original addressee or to an alternate addressee at another Post Office facility in the United States by surface transportation, subject to collection on delivery of postage at the U.S. domestic zone price.

b. The Post Office facility forwarding a parcel by surface in the United States must mark the wrapper "POSTAGE DUE," and indicate the amount of domestic postage necessary for forwarding and any applicable storage charges.

c. When delivering a forwarded parcel, the Post Office facility must collect the necessary amount for domestic transmission, even if the *Postage Due* marking is omitted. The customs clearance and delivery fee described in 712 is also collected on any forwarded, dutiable parcel.

764.132 Air

Forwarding by air must be prepaid.

764.2 Forwarding to Another Country

764.21 Mail Other than Periodicals and Parcels

764.211 General

Items may be forwarded to another country if that country accepts mail of the classification involved.

764.212 Method of Forwarding

Airmail letters and cards marked "PRIORITY," which do not bear instructions forbidding their forwarding, are forwarded by air without additional postage. Surface and all other items and parcels are forwarded by surface.

764.22 Periodicals

The provisions of 764.12 apply in the case of publications addressed to persons who have filed a change of address to another country.

764.23 Parcels

764.231 Forwarding by Surface Mail

If the addressee has moved to the country of the parcel's origin and no instructions are given to deliver to a second addressee in the United States, the Post Office facility will mark the parcel "MOVED," show the forwarding address of the addressee, and send it by surface transportation, including parcels originally received by air, after crossing out the "PAR AVION" label or other airmail marking, to the appropriate exchange office for return to the country of origin.

764.232 **Delivery to an Alternate Addressee**

If the addressee has moved to a third country or if the sender has included instructions for delivery to an alternate addressee in a third country, the Post Office facility must hold the parcel and request instructions from International Claims, St. Louis ASC, P.O. Box 80146, St. Louis, MO 63180-0146. Requests should include the following information:

a. Names and addresses of sender and addressee, or alternate addressee.

b. Weight of the parcel.

c. Whether the parcel is insured.

d. Nature and value of the contents as shown on the customs declaration.

764.233 **Undeliverable as Addressed Parcels**

If the parcel is undeliverable as addressed and (a) sender instructs that, in that event, parcel is to be abandoned, or (b) there is no return address or forwarding address, then handle parcel in accordance with 772.15 and 772.32(c).

764.24 Customs Entry Forms

Detach both copies of U.S. Customs and Border Protection (CBP) Form 3419ALT (see 713.11), affixed to dutiable mail being forwarded to another country, and treat them as prescribed in 713.32.

764.3 Backstamping

A legible postmark must be applied to (a) the back of letters and to the front of postcards when received missent and (b) to all forwarded or returned items.

765 Directory Service

Foreign mail, except foreign circulars, is provided directory service (see DMM 507).

Note: Foreign mail bearing letter-class postage, received in quantities, and having the general characteristics of circular mail, must not be given directory service.

766 Retention Period

766.1 General Procedure

Post Office facilities must hold international mail items for pickup by the addressee for 30 days. However, inbound Express Mail items must be treated as prescribed in DMM 508.1.1.7.

766.2 Exceptions

766.21 **Refused, Undeliverable, or Unforwardable Item**

An item refused or known to be neither deliverable nor forwardable must be treated as undeliverable immediately.

766.22 Request for Return

Items enclosed with a sender's request for return within a specified period may be held for the period specified, not to exceed 60 days.

766.23 Items Conditionally Refused by Addressee

An item conditionally refused by the addressee because of the duty assessed (see 713.233 for the procedure when the addressee asks that the U.S. Customs Service reconsider the duty) is held until the customs office gives a decision on the protest. If no decision is reached within 30 days, the customs office should be asked to expedite its decision.

766.24 Items Returned From Customs Custody

An item returned from customs custody with advice that the addressee has not complied with required customs entry procedures must be treated immediately as undeliverable.

766.25 Request for Delivery to Alternate Addressee

An item bearing the sender's request for delivery to an alternate addressee must be held 15 days at the disposal of the first addressee and 15 days at the disposal of the second. If the alternate addressee is at another Post Office facility, the item is forwarded subject to 764.1, and the 15-day period begins from the day of receipt at the second office of address.

770 Undeliverable Mail

771 Mail of Domestic Origin

771.1 General Procedure

Items that originate in the United States and are found to be undeliverable in the destination country will generally be returned to the U.S. sender.

771.2 Exceptions

Ordinary (unregistered) items of printed matter, other than books, are not returned, unless the sender has requested their return. Parcels whose customs declaration requests abandonment in event of nondelivery are usually not returned.

771.3 Endorsements

Mail returned to the United States should bear an endorsement specifying the reason for nondelivery. The following French and Spanish language endorsements are frequently noted on returned mail:

Adresse Insuffisant (Fr)	Insufficient Address
Insufficiente (direccion) (Sp)	Insufficient Address
Parti (Fr)	Left (Gone Away)
Ausente (Sp)	Left (Gone Away)
Demenage (Fr)	Moved
Decede (Fr)	Deceased
Fallecido (Sp)	Deceased
Murio (Sp)	Deceased
Inconnu (Fr)	Unknown
Desconocido (Sp)	Unknown
Non Reclame (Fr)	Unclaimed
No Reclamado (Sp)	Unclaimed
Refuse (Fr)	Refused
Rehusado (Sp)	Refused
Objets Interdits (Fr)	Prohibited Items
Objectos Prohibidos (Sp)	Prohibited Items
License d' Importation Manque (Fr)	No Import License
De passe le Poids Reglementaire (Fr)	Overweight Parcel
En Sus de la Norme (contenu) (Fr)	Contents Exceed the Limits
Rezagos (Sp)	Return-Undeliverable

771.4 Remailing of Returned Mail

New postage must be applied to returned items, which are subsequently reentered into the mail.

771.5 Return Charges for First-Class Mail International

771.51 General Procedure

Except as noted in 771.52, undeliverable-as-addressed First-Class Mail International mail that a foreign postal administration returns to the U.S. sender is *not* subject to the payment of return charges. This provision applies to postal items that were originally entered at the following rates of postage:

a. First-Class Mail International.

b. Postcard.

c. International Priority Airmail (IPA).

d. First-Class Mail International M-bag.

e. International Surface Air Lift (ISAL).

771.52 Exceptions

Delivery Post Office facilities should collect return charges from the U.S. sender under the following circumstances:

a. If a returned First-Class Mail International item bears a short-paid endorsement that was originally applied by the Postal Service dispatching exchange office, the delivery office should collect the

amount of the postage deficiency that would otherwise have been collected from the foreign addressee.

b. If a returned First-Class Mail International item bears a collection instruction that was applied by a Postal Service International Service Center (ISC), international exchange office, or mail recovery center, the delivery office should collect the "due amount" that is specified on the mailpiece.

771.6 Return Charges for Priority Mail International

On delivery to the sender, return parcels are subject to collection of return postage and any other charges, including charges assessed by the foreign postal authorities. The amount of such charges will be indicated by the international exchange office, usually on a PS Form 2993, *Returned or Redirected Parcel* (label).

771.7 Handling of Returned Parcels

771.71 Refused by Sender

If the sender refuses a returned parcel, it must be disposed of as dead Priority Mail International.

771.72 Sender Has Moved to Another U.S. Address

If the sender has moved to another address in the United States, the returned parcel may be redirected, subject to forwarding postage, at the U.S. domestic zone price.

771.73 Sender Has Moved to Another Country

If the sender has moved to another country, the Post Office facility must hold the parcel and request instructions from International Claims, St. Louis ASC, P.O. Box 80146, St. Louis, MO 63180-0146. Requests should include the following information:

a. New address of the sender.

b. Amount of return charges due on the parcel.

c. Weight of the parcel.

d. Whether the parcel is insured.

e. Nature and value of the contents as shown on the customs declaration.

772 Mail of Foreign Origin

772.1 Marking

772.11 Reason for Nondelivery

At the end of the retention period (see 766), or sooner, when applicable, undeliverable items must be endorsed with the reason for nondelivery (see DMM 507).

772.12 Postmarking

Apply a legible postmark to back of return letters and front of return postcards.

772.13 Address

Cross out but do not obliterate the address, and draw an arrow to return address.

772.14 Method of Return

Undeliverable airmail letters and cards and all First-Class Mail International items marked “PRIORITY” are returned to origin by air. All parcels and other items are returned by surface. Any “AIRMAIL” or “PAR AVION” endorsements or label must be obliterated on undeliverable items returned by surface.

772.15 Abandoned Parcel

If the sender of a parcel has given instructions on the wrapper or dispatch note that the parcel is to be abandoned if undeliverable, endorse the parcel “ABANDONED” (see 772.32c).

772.2 Dutiable Mail

Detach both copies of U.S. Customs and Border Protection (CBP) Form 3419ALT (see 713.11) and treat them in accordance with 713.33 and 713.52.

772.3 Disposal

772.31 General Procedure

Dispatch undeliverable letters and postcards bearing a return address to the appropriate exchange office as if they were originating mail. Dispatch all other undeliverable items to the appropriate exchange office as if they were originating mail.

772.32 Exceptions

The following exceptions apply:

a. Postcards that do not bear the sender’s request for return and postcards with no return address are disposed of in accordance with DMM 507.

b. Ordinary (unregistered) printed matter, other than books, which does not bear the sender’s request for return, is disposed of in accordance with DMM 507. Books and registered prints must always be returned to origin.

c. Parcels with no return address or endorsed “ABANDONED” (see 772.15) must be sent to the appropriate mail recovery center. If the parcel was assessed duty, detach CBP Form 3419ALT (see 713.11) and report it as an uncollected item (see 713.52) before forwarding it to the appropriate mail recovery center.

d. Canadian Periodicals Mail publications are treated in accordance with DMM 507.

e. Canadian originating mail of all classifications not covered by *a* and *b* above and not bearing the sender's name and address must be sent to the following address:

UNDELIVERABLE MAIL OFFICE
CANADA POST CORPORATION
1860 MIDLAND AVE UNIT 1
SCARBOROUGH ON M1P 2M0
CANADA

780 Items Mailed Abroad by or on Behalf of Senders in the United States

781 Payment Required

781.1 Postage Payment Required

Payment of U.S. postage is required to secure delivery of mail when the mailing is by or on behalf of a person or firm that is a resident of the United States and the foreign postage price applied to such items is lower than the comparable U.S. domestic rate.

781.2 Handling Charges

Undeliverable-as-addressed mail returned to the sender for which outbound postage was not paid to the U.S. Postal Service is subject to the payment of handling charges. On delivery to the sender, the sender may be charged the First-Class Mail International rate for the weight and shape of the returned piece.

782 Definition of Terms

782.1 Resident

A resident of the United States includes any firm that has a place of business in the United States or is incorporated or otherwise organized in the United States, its territories, or its possessions.

782.2 By or on Behalf

A mailing is made by or on behalf of a person or firm that is a resident of the United States if such a resident seeks or expects to derive economic benefit or advantage from that mailing.

782.3 Place of Business

A place of business in the United States is any location in the United States, its territories, or its possessions where a firm's employees or agents regularly have personal contact with other individuals for conducting the firm's business. For the purposes of this section, a firm whose employees or agents have personal contact with others for conducting the firm's business in different places in the United States for short periods (for example, at hotels in different cities for 1 or 2 days at a time) is considered to have a place of business in the United States if the aggregate amount of time spent in the United States is 180 days or more within 12 consecutive months.

782.4 Agent

The use of a nonexclusive agent in the United States for the sole purpose of accepting orders and remissions for transmission to a firm in another country or for the sole purpose of distributing merchandise manufactured in another country and shipped to the United States in bulk does not by itself establish a place of business in the United States.

783 Advance Payment Required

783.1 Sample Mailpiece

A sender affected by the provisions in 781 must submit a sample mailpiece (envelope and contents) from the proposed mailing; a statement about the number of items to be mailed, the date of mailing, and the place of mailing; and a check, made payable to the U.S. Postal Service, to cover the amount of the applicable U.S. postage. The sample mailpiece, statement, and check must be sent to:

MANAGER INTERNATIONAL PRODUCTS
US POSTAL SERVICE
475 L'ENFANT PLZ SW RM 5726
WASHINGTON DC 20260-5726

783.2 Headquarters Notification

Headquarters provides notification of postage acceptance and approval of the mailing to the sender and to the receiving U.S. exchange office. This notification permits the items in the mailing to go forward to the addressees without delay when the items reach the United States.

784 Advance Payment Not Made

784.1 Return or Disposal of Items

Items may be returned to origin or disposed of in accordance with Postal Service regulations if U.S. postage is not paid.

784.2 Mailings Without Advance Payment

A mailing subject to the provisions in 781 received without advance payment of U.S. domestic postage is held at the receiving U.S. exchange office. The exchange office reports the mailing to the executive director of International Postal Affairs, Postal Service Headquarters. (The International Postal Affairs office will advise the exchange office to release the mail when the foreign mailer has paid the applicable postage.) The report must contain the following information:

a. Title and/or nature of the items.

b. Identity of the sender.

c. Number of items detained.

d. Weight of a single item.

e. Foreign postage paid per item.

f. Country of mailing.

785 Report of Mailings

The receiving U.S. exchange office must report any mail appearing to be subject to the provisions of this subchapter to the following address:

EXECUTIVE DIRECTOR, INTERNATIONAL POSTAL AFFAIRS
US POSTAL SERVICE
1735 N LYNN ST STE 6026
ARLINGTON VA 22209-6111

8 (Reserved)

This page intentionally left blank

9 Inquiries, Indemnities, and Refunds

910 Reports Encouraged

Customers are urged to report losses, nondelivery, or mistreatment of mail, even though there may be no provision for indemnity. Such reports can lead to improved service.

920 Inquiries and Claims

921 Inquiries

921.1 Definition

"Inquiry" is a general term that includes:

a. Requests concerning the disposition of an item mailed to or from a foreign country.

b. Complaints or reports concerning the loss, damage, missing contents, or improper delivery or return of an item mailed to or from a foreign country.

921.2 Initiating an Inquiry

Inquiries can be initiated for Global Express Guaranteed (GXG) items, Express Mail International items, registered items, and insured and ordinary parcels. Inquiries are not accepted for ordinary letters, Priority Mail International Flat Rate Envelopes, Priority Mail International Small Flat Rate Priced Boxes, or M-bags. Customers must wait a reasonable amount of time for an international item to be delivered in the foreign country before initiating an inquiry. Customers must initiate inquiries within the time limits in Exhibit 921.2.

Exhibit 921.2
Time Limits for Inquiries

Product or Extra Service	Who	When to File (from mailing date)	
		No Sooner Than	No Later Than
Global Express Guaranteed	U.S. Sender Only	3 days	30 days
Express Mail International	U.S. Sender Only	3 days	90 days
Express Mail International With Guarantee	U.S. Sender Only	3 days	30 days
Registered Mail or insured or ordinary parcels	Sender or Addressee	7 days	6 months

Note: Inquires are not accepted for First-Class Mail International items, Priority Mail International Flat Rate Envelopes or Small Flat Rate Priced Boxes, or M-bags.

921.3 How to Initiate

Customers must call the International Inquiry Center at 800-222-1811 within the time limits listed in Exhibit 921.2 to initiate an inquiry. Customers will be asked to provide information regarding the mailing, including but not limited to the following:

a. Mailing receipt number or barcode number of the article.

b. Names and addresses of the mailer and addressee.

c. Date of mailing.

d. Description of contents.

921.4 Inquiry Process

After the Postal Service customer provides the International Inquiry Center with the relevant mailing information, the International Inquiry Center will correspond with the appropriate foreign post and advise the customer of the results of the inquiry. Customers must allow foreign posts approximately 60 days to research and respond to the International Inquiry Center for inquiries on registered items and insured and ordinary parcels. When there is a determination that an item has been lost, the International Inquiry Center will mail a claim packet to the customer. The packet will include a letter of instruction on how to complete and submit the claim.

921.5 General Procedures

921.51 Nondelivery

The U.S. Postal Service will initiate an inquiry within the time frames specified in 921.2 with the destination postal administration in any case involving an Express Mail International item, a registered item, or an insured or ordinary parcel that has not been delivered. Inquiries are not accepted for ordinary letters, Priority Mail International Flat Rate Envelopes, Priority Mail International Small Flat Rate Priced Boxes, or M-bags. For nondelivery of Global Express Guaranteed shipments, see 212.46.

921.52 Return Receipts Improperly Completed or Not Received

If the sender receives an improperly completed return receipt (see 341 for completion at destination) or if a return receipt is not received, the sender may go to any Post Office and request a refund of the return receipt extra service fee. If the sender wants to inquire about the delivery of the article, the sender must call 800-222-1811 to initiate an inquiry (see 921.1).

921.53 Express Mail International Items, Registered Mail Items, and Insured and Ordinary Parcels With Damaged or Missing Contents

Customers must go to a Post Office to report items that are damaged or are missing contents. Postal personnel should complete PS Form 673, *Report of Rifled Parcel*, in accordance with POM 169.3 or PS Form 2856, *Damage Report of Insured Parcel and Contents*, in accordance with POM 146.112 for international and/or domestic articles as applicable.

921.54 Wrapper Found Without Contents

921.541 Parcels of Domestic Origin

When the contents of a parcel of domestic origin become separated from the wrapper, Postal Service personnel should inform the sender in accordance with the instructions on PS Form 3760, *Parcel Search Request.*

921.542 Parcels of Foreign Origin

If the parcel is of foreign origin, send PS Form 3760, appropriately modified, to the addressee.

922 Claims

922.1 General Description

A claim is a request by a U.S. Postal Service customer for an indemnity payment that resulted from the loss, damage, or missing contents of a GXG, Express Mail International, or registered item, or an insured or ordinary parcel. See 222.71, 320, 330, and Individual Country Listings for information on indemnity limits. See 930 and 940 for information on indemnity payments and postage refunds.

922.2 Filing a Claim

Claims may be filed for GXG, Express Mail International, registered items, and insured and ordinary parcels as noted in Exhibit 922.2. Claims may not be filed for ordinary letters or M-bags. Claims for registered items and insured and ordinary parcels may not be filed until after an inquiry has been completed in accordance with the procedures in 921. Claims for items that have damaged or missing contents should be filed immediately. Claims for registered items and insured and ordinary parcels delivered to the addressee in damaged condition or with missing contents are payable only to the addressee, unless the addressee waives the right to payment, in writing, in favor of the sender. All claims for inbound international registered items and insured and ordinary parcels received in damaged condition or with missing contents must be supported by PS Form 2856. If the addressee does not accept delivery and the item is returned to the sender, the sender will be the payee.

Exhibit 922.2
Filing Claims

Product or Extra Service	Who	How	
		Lost Article	Damaged/ Missing Contents
GXG and Express Mail International	U.S. Sender Only	800-222-1811	800-222-1811
GXG and Express Mail International (article returned to sender)	U.S. Sender Only	N/A	Any Post Office* (PS Form 1000)
Registered Mail or insured or ordinary parcels	Sender or Addressee	800-222-1811	Any Post Office* (PS Form 1000)

* *Must immediately present the article, mailing container, wrapping, packaging, and any other contents received in damaged condition or with missing contents to a Post Office for inspection. Customers in receipt of an item from Canada that is in damaged condition or has some or all of its contents missing must instruct the Canadian sender to file a claim.*

922.3 Claims Process

When there is a determination that an item was lost or has damaged or missing contents, the customer will receive PS Form 1000, *Domestic or International Claim.*

922.31 Evidence of Indemnity Coverage

Indemnity claims for GXG, Express Mail International, Registered Mail, and insured and ordinary parcels must be supported as follows:

a. If mailed in the United States:

(1) For Global Express Guaranteed items, the original receipt of the GXG Air Waybill/Shipping Invoice.

(2) For Express Mail International items, PS Form 2861, *Express Mail International Service Inquiry,* received from the International Inquiry Center.

(3) For registered items and insured parcels, the original mailing receipt and sender's copy of PS Form 2976-A, *Customs Declaration and Dispatch Note — CP 72*, issued at the time of mailing. Copies are not acceptable.

(4) For ordinary parcels, the customer copy of PS Form 2976-A, *Customs Declaration and Dispatch Note — CP 72.*

b. If mailed from a foreign country: The original mailing receipt if available, the customs label, the wrapper, and any other markings or endorsements on the mailing container that indicate how it was sent.

Note: Mailing particulars must also be verified with the country of origin before a claim can be settled.

922.32 Evidence of Value

The customer must submit acceptable evidence to establish the cost or value of the article at the time it was mailed. Other evidence may be requested to help determine an accurate value. Examples of acceptable evidence include:

a. Sales receipt, invoice, or statement of value from a reputable dealer.

b. Customer's own statement describing the lost or damaged article, including the date and place of purchase, the amount paid, and whether new or used (only if a sales receipt, invoice, or statement of

value from a reputable dealer is not available). If the article is handmade, the statement must include the price of the materials and labor used. The statement must describe the article in enough detail to determine whether the value claimed is accurate.

c. Picture from a catalog showing the value of a similar article (only if a sales receipt, invoice, or statement of value from a reputable dealer is not available). The date and place of purchase must be included.

d. Paid repair bills, if the claim is for partial damage; estimates of repair costs or appraisals from a reputable dealer. Repair costs may not exceed the original purchase price.

e. Receipt or invoice of costs incurred for the reconstruction of nonnegotiable documents.

922.4 Processing Claims for Damaged or Missing Contents

The customer must:

a. Present the damaged article, mailing container, wrapping, packaging, and any other contents received to any Post Office for inspection.

b. Complete all fields on PS Form 1000.

922.41 Postal Service

Postal Service personnel must:

a. Verify that all applicable fields on PS Form 1000 are complete.

b. Prepare a damage report on PS Form 2856, *Damage Report of Insured Parcel and Contents*, detailing the condition of the item at the time of delivery, and indicate whether or not the item was properly packaged to withstand normal handling in international mail.

c. Attach the damage report and the documentation described in 922.3 to the claim.

d. Send PS Form 1000 and related documents, including the customs label and the wrapper, if appropriate, to:

INTERNATIONAL CLAIMS
ACCOUNTING SERVICES
PO BOX 80146
ST LOUIS MO 63180-0146

923 Disposition of Damaged Mail

Dispose of damaged Registered Mail, insured parcels, and ordinary parcels for which claims have been filed as follows:

a. International Registered Mail (except Canadian Registered Mail — see 923b) must be returned to the customer, whether or not the article has salvage value.

b. International insured parcels, ordinary parcels, and Canadian Registered Mail:

(1) If the claim is for *partial* damage, return the article to the customer.

(2) If the claim is for *total damage and the article has salvage value* ($25.00 or more), retain the article and the packaging at the Post Office facility until the claim is settled and disposition instructions are received from Accounting Services. Provide the customer a copy of PS Form 3831, *Receipt for Article(s) Damaged in Mails*. Endorse the original receipt "Claim Filed [date]," date-stamp it, and initial it. Return the receipt to the customer. Instruct the customer to keep the receipt until the claim is settled. If the claim is denied, the article must be returned to the customer after all time frames for appeals have elapsed (see 931.3).

(3) If the claim is for *total damage and the article has no salvage value* (under $25.00), return the article to the customer, or with the customer's consent, dispose of the article with the understanding that the Postal Service will assume no responsibility if the claim is denied.

930 Indemnity Payments

931 Adjudication and Approval

931.1 When to Be Instituted

Claims for indemnity are initiated upon receipt of a completed PS Form 1000 with appropriate documentation by International Claims, Accounting Services, PO Box 80146, St. Louis, MO 63180-0146.

931.2 International Claims

931.21 Indemnity Claims for International Registered Mail, Insured Parcels, and Ordinary Parcels of U.S. and Foreign Origin

Indemnity claims relating to international Registered Mail and insured and ordinary parcels of both U.S. and foreign origin are adjudicated by Accounting Services in St. Louis, Missouri.

931.22 Country of Origin Pays Indemnity

Payment is made as follows:

a. Express Mail claims are paid by the country of origin to the sender. Payments to U.S. senders will by made by the U.S. Postal Service.

b. Indemnity for the loss of Registered Mail and insured and ordinary parcels is paid by the country of origin to the sender. Payments to U.S. senders will be made by the U.S. Postal Service. The sender may waive the right to payment, in writing, in favor of the addressee. Payment in such cases will be made by the destination administration.

c. Claims for items delivered in damaged condition or with missing contents may be made to the addressee by the destination administration. If the addressee waives the right to payment, in writing, in favor of the U.S. sender, payment will be made to the sender by the U.S. Postal Service.

d. Claims for items mailed in foreign administrations that are delivered in damaged condition or with missing contents may be paid to the addressee. Payments will be made to the U.S. addressee by the U.S. Postal Service. The addressee may waive the right to payment in favor of the sender. Payment in such cases will be made by the origin administration.

931.3 Appeals

931.31 Appealing a Claims Decision

A customer may appeal a claims decision by filing a written appeal within 60 days of the date of the original decision. The customer must send the appeal directly to International Claims Appeals, Accounting Services, PO Box 80146, St. Louis, MO 63180-0146.

931.32 Final Postal Service Decision of Claims

If the manager of International Claims Appeals at the St. Louis ASC sustains the denial of a claim, the customer may submit an additional appeal within 60 days for final review and decision to the Consumer Advocate, International Claim Appeals, 475 L'Enfant Plz SW Rm 10343, Washington, DC 20260-2200, who may waive standards in favor of the customer.

932 General Exceptions To Payment — Registered Mail, Priority Mail International Insured Parcels, and Priority Mail International Ordinary Parcels

Indemnity may not be paid:

a. In excess of the limit prescribed for the insurance or registry fee paid or greater than that corresponding to the actual amount of loss (except Registered Mail service), damage, or the missing contents. Allowance must be made for depreciation or for needed repairs, and in the absence of purchase receipts or invoices, the contents must be described in sufficient detail.

b. When an item cannot be accounted for due to the destruction of service records by *force majeure*.

c. When the contents are prohibited.

d. For an item seized by customs or any other government agency.

e. When no inquiry or application has been made by the claimant or a representative within 6 months, commencing with the day following the mailing of the item. In the case of insured mail with Canada, however, the time limit may be waived when it is satisfactorily established that the delay was unavoidable and not the fault of the claimant.

f. For damage that results from the characteristics of the contents - that is, its inability, due to its nature, to withstand the ordinary incidents of the contemplated carriage.

g. When full compensation or reimbursement has otherwise been made by the U.S. Postal Service or by any outside firm or corporation whatsoever except on a pro rata basis as coinsurer.

h. For sentimental values arising from association. Also, in the absence of a complete description, the claimant must satisfactorily establish the ordinary market value at the time of mailing, particularly in the case of heirlooms or antiques.

i. For an amount in excess of the maximum prescribed for the insurance or registry fee paid, unless responsibility rests with the United States and it is shown to the satisfaction of the Postmaster General that the sender was charged a fee less than that required to cover the amount of indemnity desired, through error on the part of the U.S. Postal Service. On such a showing, the deficiency in fee may be collected from the sender and postal indemnity paid, within the limit fixed for the higher fee.

933 Payments for Priority Mail International Insured Parcels and Priority Mail International Ordinary Parcels

933.1 General Provisions

933.11 Insured Parcels

Indemnity may be paid for loss, damage, or missing contents, based on the actual value of articles at the time and place of mailing.

933.12 Indemnity Will Not Be Paid

In addition to the general exceptions to payment described in 932, indemnity will not be paid:

a. When other countries report delivery of parcels without external trace of damage or missing contents and acceptance by the addressee or an agent without reservation concerning the condition of the contents, and when delivery was made under conditions prescribed by the domestic regulations of the country of destination for mail of the same kind or on presentation of a regular postal identity card.

b. When loss, damage, or missing contents has been caused by the fault or negligence of the sender or the addressee or the representative of either, such as failure to endorse the parcel conspicuously to show the nature of the contents or to provide adequate packing for the length of the journey and for the protection of the contents.

c. When the claimant, with intent to defraud, has declared the contents of a parcel to be above their real value.

d. For parcels that:

(1) Contain matter of no intrinsic value.

(2) Contain matter that did not conform to applicable postal conventions.

(3) Were not posted in the manner prescribed. In the event of loss, damage, or missing contents of mail erroneously accepted for insurance to other countries, limited indemnity may be paid as if it had been addressed to a domestic destination — i.e., on the basis of the indemnity limits for domestic insured mail. If postage

was erroneously collected at other than a parcel price, but the parcel was otherwise properly accepted for insurance, indemnity may be paid pursuant to the general provisions of this section and the special provisions of 933.2.

e. For indirect loss or loss of profits.

f. For an amount in excess of the maximum prescribed for the insurance fee paid, unless full or partial responsibility rests with the other country and the sender requested full coverage at the time of mailing, but a deficient and unauthorized insurance fee was collected. In such case, the sender must be paid for full value, less the amount of the deficient fee, but not exceeding the limit fixed for the appropriate insurance fee.

g. When evidence of insurance coverage has not been presented.

h. Payment for parcels delivered with damaged or missing contents is made to the addressee unless the addressee waives payment, in writing, in favor of the sender.

933.13 Ordinary Priority Mail International Parcels — Indemnity Limitations

Coverage is limited to the actual value of contents or the maximum indemnity based on the weight of the article, whichever is less.

933.14 Ordinary Priority Mail International Parcels — Exceptions to Indemnity

In addition to the general exceptions to payment described in 932, indemnity may not be paid:

a. For parcels containing coins; banknotes; currency notes (paper money); securities of any kind payable to bearer; traveler's checks; platinum, gold, and silver; precious stones; jewelry; watches; and other valuable or prohibited articles.

b. For consequential losses, delay, concealed damage, spoilage of perishable items, articles improperly packaged, and articles too fragile to withstand normal handling in the mail.

c. When other countries report delivery of parcels without external trace of damage or missing contents and acceptance by the addressee or an agent without reservation concerning the condition of the contents, and when delivery was made under conditions prescribed by the domestic regulations of the country of destination for mail of the same kind or on presentation of a regular postal identity card.

d. When loss, damage, or missing contents has been caused by the fault or negligence of the sender or the addressee or the representative of either, such as failure to endorse the parcel conspicuously to show the nature of the contents or to provide adequate packing for the length of the journey and for the protection of the contents.

e. When the claimant, with intent to defraud, has declared the contents of a parcel to be above their real value.

f. For indirect loss or loss of profits.

g. When evidence of the value of the ordinary indemnity coverage on an ordinary parcel has not been presented.

h. To the addressee for parcels delivered to the addressee in damaged condition or with missing contents unless the addressee waives payment, in writing, in favor of the sender.

933.2 Special Provisions

The sender may be paid only such indemnity for loss, damage, or missing contents occurring after redispatch by the original country of address to a third country, if the country in which the mistreatment occurred is willing or obliged to pay under any agreement between the countries involved.

934 Payments for Registered Mail

934.1 General Provisions

934.11 Indemnity Paid by Country of Origin

Indemnity for loss is paid by the country of origin for registered items and is made according to 934.2.

934.12 Parcels Erroneously Accepted as Registered Mail

If a parcel is accepted in error as Registered Mail, indemnity may be paid under the conditions in 934.2.

934.13 Indemnity Will Not Be Paid

In addition to the general exceptions to payment described in 932, indemnity will not be paid:

a. To anyone in the United States, other than the sender, for the loss of an outbound or an inbound registered item. The sender may waive payment, in writing, in favor of the addressee.

b. To anyone in the United States, other than the addressee, for items delivered in damaged condition or with missing contents. The addressee may waive payment, in writing, in favor of the sender.

c. In excess of the limits in 934.2 for domestic registered letters bearing foreign return addresses that are forwarded under 762.2.

934.14 Indemnity Paid by Country of Destination

Indemnity for damage and loss of contents is made by the country of destination to the addressee unless the addressee waives payment, in writing, in favor of the sender.

934.2 Special Provisions

Regardless of the declared value of a registered item, the maximum amount of indemnity payable for loss, damage, or missing contents is $47.33.

935 Payments for Express Mail International

935.1 When Authorized

Express Mail International shipments are covered by document reconstruction and merchandise insurance in case of loss, damage, or missing contents. Indemnity will be paid by the Postal Service as specified in DMM 609 and 503 and IMM 222.71 and 935.2.

935.2 When Prohibited

Indemnity for Express Mail International items will not be paid:

a. For delay in delivery.

b. When the contents are prohibited.

c. For any items seized by customs or any other government agency.

d. When no inquiry or claim has been made by the mailer within 90 days from the date of mailing.

e. For damage that results from the quality of the contents; that is, inability, due to its nature, to withstand the ordinary incidents of international Express Mail carriage. See DMM 609.

f. When delivery was made under conditions prescribed for Express Mail International items by the country of destination.

g. When evidence of mailing has not been presented.

h. For any reason specified in DMM 609.

940 Postage Refunds

941 Postage Refunds for First-Class Mail International and Priority Mail International

941.1 General

A refund may be made when postage, extra service fees, or other charges have been paid on First-Class Mail International and Priority Mail International items:

a. For which full service was not rendered.

b. Which were paid in excess of the proper price.

941.2 Applications by Senders

Senders requesting postage refunds should submit to the postmaster at the office at which the items were mailed:

a. An application on PS Form 3533, *Application and Voucher for Refund of Postage, Fees, and Services,* in duplicate.

b. When available, the envelope or wrapper, or the portion thereof having names and addresses of sender and addressee, canceled postage, and postal markings.

c. Any other evidence of payment of the amount of postage, fees, or charges for which refund is desired.

941.3 Processing Refund Applications

941.31 Items Originating in United States

When the refund request relates to mail originating in the United States and there is no reason to believe that the other country is at fault, process the application as prescribed in DMM 604.

941.32 Items Originating in a Country Other Than the United States

When there is reason to believe that the other country is at fault, or when the request relates to mail originating in another country, forward the application with the wrapper and all supporting papers to the International Inquiry Center, US Postal Service, PO Box 39955, Denver, CO 80239-0955.

942 Postage Refunds for Express Mail International Items

942.1 Who May File

File requests for refunds as follows:

a. U.S. senders of Express Mail International items must complete the inquiry process (see 922) before filing for a postage refund. An inquiry **must** be initiated within 90 days of the date of mailing by calling the International Inquiry Center at 800-222-1811.

b. U.S. senders of Express Mail International items With Guarantee service that did not meet the guaranteed delivery date must initiate a request for postage refund no later than 30 days from the date of mailing by calling the International Inquiry Center at 800-222-1811.

942.2 Conditions

942.21 Express Mail International Refunds

The Postal Service will refund postage of Express Mail International items only when:

a. The inquiry process has confirmed that total loss, damage, or missing contents of an Express Mail International item has occurred.

b. The customer has initiated an inquiry within the requisite 90-day filing period.

c. The Expedited Service specialist has received verification from the Product Tracking System (PTS) or the International Inquiry Center that loss, damage, or missing contents has occurred.

d. The customer has received PS Form 3533, *Application and Voucher for Refund of Postage, Fees, and Services.*

942.22 Express Mail International With Guarantee Refunds

The Postal Service will refund postage of Express Mail International With Guarantee service items only when:

a. The customer has initiated a request for postage refund within the requisite 30-day filing period.

b. The International Inquiry Center received confirmation from the foreign postal administration that the item did not meet the specified delivery standard.

c. The customer has received PS Form 3533-GE, *Application and Voucher for Refund of Postage and Fees — Express Mail International With Guarantee Service.*

942.3 Applications by Senders

942.31 Express Mail International

For Express Mail International refunds, mailers requesting postage refunds must submit the following items to the postmaster at the office at which the item was mailed:

a. An application on PS Form 3533 in duplicate.

b. The mailer's receipt (original copy of the mailing label) showing evidence of the amount of postage for which refund is desired.

942.32 Express Mail International With Guarantee

For Express Mail International With Guarantee service refunds, mailers requesting postage refunds must submit the following items to the address noted below:

a. An application on PS Form 3533-GE.

b. The mailer's receipt or the original copy of the mailing label showing the guaranteed delivery date and the amount of postage paid.

Mailers must submit these items to the following address:

SCANNING AND IMAGING CENTER
US POSTAL SERVICE
PO BOX 5212
JANESVILLE WI 53547-5212

942.4 Processing of Refund

Express Mail International postage refund requests are processed under DMM 604. The mailer must complete Part I of PS Form 3533 in duplicate and submit it, along with the original customer copy of the mailing label (PS Label 11-B, *Express Mail Mailing Label — Post Office to Addressee),* to any Post Office facility. Refund requests for Express Mail International With Guarantee service are processed when a customer submits PS Form 3533-GE with appropriate documentation (see 942.2) to:

SCANNING AND IMAGING CENTER
US POSTAL SERVICE
PO BOX 5212
JANESVILLE WI 53547-5212

942.5 Unallowable Refunds — Express Mail International With No Service Guarantee

942.51 Postage Refunds — Express Mail International

Refunds for Express Mail International will *not* be made for the following:

a. Delayed Express Mail International items.

b. When the item contained prohibited matter.

c. When the item has been seized or confiscated by customs or any other government agency of the destination country.

942.52 Unallowable Refunds — Express Mail International With Guarantee Service

Refunds will *not* be made for the following:

a. Delivery was attempted but could not be made.

b. The delivery address or postal code was incomplete or inaccurate.

c. The item was detained or delayed by customs or any other government or law enforcement agency of the destination country.

d. The item had to be forwarded to another address.

e. Delay resulted from any defect or characteristic due to the nature of the shipment, even if known to USPS at acceptance.

f. The item was delayed by any circumstance beyond the control of USPS and the foreign postal administration, acts of God, *force majeure,* terrorist activities, strikes, labor actions, war, insurrection, or civil disobedience.

g. The item was held by customs at origin or destination for more than 24 hours. If the item was held by customs for less than 24 hours, the guarantee may be adjusted to account for the delay by customs.

h. The item was not deposited at a designated USPS Express Mail facility.

942.53 Consequential Damages

USPS is not liable for consequential or special damages or other indirect loss. Consequential damage or loss includes but is not limited to loss of income, profit, interest, markets, and use of contents. See DMM 609 and 503 and IMM 221.3 and 935.2 for limitations of indemnity coverage.

943 Processing Refund Applications

943.1 Items Originating in the United States

Requests for refunds for ordinary letters and for Registered Mail, Priority Mail International, Express Mail International, and Express Mail International With Guarantee service originating in the United States are handled as follows:

a. If there is no reason to believe that the other country is at fault, process the application under DMM 604.

b. If there is reason to believe a registered, insured, or ordinary parcel originating in the United States was returned in error, or if the parcel was returned with no annotation showing reason for return, call the International Inquiry Center at 800-222-1811 to initiate an inquiry.

c. Customers whose Express Mail International With Guarantee service did not meet the guaranteed delivery date must call 800-222-1811 within 30 days of the date of mailing to request a postage refund form (PS Form 3533-GE).

943.2 Items Originating in a Country Other Than the United States

When there is reason to believe the other country is at fault, or when the request relates to mail originating in another country, call the International Inquiry Center at 800-222-1811 to initiate an inquiry.

Index of Countries and Localities

Postage prices and other mailing conditions for the countries and localities listed below appear in the Individual Country Listings (ICLs). Localities that are not listed separately in the ICLs under their own heading are listed with the country identified in parentheses. Page numbers are provided for easy reference for countries that have an individual country listing. For the conditions of mailing for U.S. Possessions and Trust Territories, see DMM 608.

Country Name	Page Number
Abu Dhabi (United Arab Emirates)	672
Admiralty Islands (Papua New Guinea)	564
Afghanistan	243
Aitutaki, Cook Islands (New Zealand)	548
Ajman (United Arab Emirates)	672
Aland Island (Finland)	384
Albania	245
Alberta (Canada)	319
Alderney (Channel Islands) (Great Britain and Northern Ireland)	406
Algeria	247
Alhucemas (Spain)	623
Alofi Island (New Caledonia)	546
American Samoa, United States (Domestic Mail)	See DMM 608
Andaman Islands (India)	436
Andorra	250
Angola	252
Anguilla	254
Anjouan (Comoros)	337
Annobon Island (Equatorial Guinea)	371
Antigua (Antigua and Barbuda)	256
Antigua and Barbuda	256
Argentina	258
Armenia	261
Aruba	263
Ascension	265
Astypalaia (Greece)	409
Atafu (Western Samoa)	689
Atiu, Cook Islands (New Zealand)	548
Australia	266
Austria	268
Avarua (New Zealand)	548
Azerbaijan	271
Azores (Portugal)	576
Bahamas	273
Bahrain	275
Balearic Islands (Spain)	623
Baluchistan (Pakistan)	560
Bangladesh	277
Banks Island (Vanuatu)	678
Barbados	279
Barbuda (Antigua and Barbuda)	256

Country Name	Page Number
Barthelemy (Guadeloupe)	416
Belarus	281
Belgium	283
Belize	286
Benin	288
Bermuda	290
Bhutan	292
Bismark Archipelago (Papua New Guinea)	564
Bolivia	294
Bonaire (Netherlands Antilles)	544
Borabora (French Polynesia)	391
Borneo (Indonesia)	439
Bosnia-Herzegovina	296
Botswana	298
Bougainville (Papua New Guinea)	564
Bourbon (Reunion)	580
Brazil	300
British Columbia (Canada)	319
British Guiana (Guyana)	424
British Honduras (Belize)	286
British Virgin Islands	303
Brunei Darussalam	305
Buka (Papua New Guinea)	564
Bulgaria	307
Burkina Faso	309
Burma	311
Burundi	313
Caicos Islands (Turks and Caicos Islands)	664
Cambodia	315
Cameroon	317
Canada	319
Canary Islands (Spain)	623
Canton Island (Kiribati)	466
Cape Verde	322
Cayman Islands	324
Central African Republic	326
Ceuta (Spain)	623
Ceylon (Sri Lanka)	626
Chad	328
Chaferinas Islands (Spain)	623
Chalki (Greece)	409
Channel Islands (Jersey, Guernsey, Alderney, and Sark) (Great Britain and Northern Ireland)	406

Country Name	Page Number
Chile	330
China	332
Christiansted, US Virgin Islands, United States (Domestic Mail)	See DMM 608
Christmas Island (Australia)	266
Christmas Island (Kiribati)	466
Chuuk, Micronesia, United States (Domestic Mail)	See DMM 608
Cocos Island (Australia)	266
Colombia	334
Comoros	337
Congo, Democratic Republic of the	339
Congo, Republic of the	341
Cook Islands (New Zealand)	548
Corisco Island (Equatorial Guinea)	371
Corsica (France)	386
Costa Rica	343
Cote d'Ivoire	345
Crete (Greece)	409
Croatia	347
Cuba	349
Cumino Island (Malta)	512
Curacao (Netherlands Antilles)	544
Cyjrenaica (Libya)	488
Cyprus	353
Czech Republic	355
Dahomey (Benin)	288
Damao (India)	436
Danger Islands (New Zealand)	548
Denmark	357
Desirade Island (Guadeloupe)	416
Diu (India)	436
Djibouti	359
Dodecanese Islands (Greece)	409
Doha (Qatar)	578
Dominica	361
Dominican Republic	363
Dubai (United Arab Emirates)	672
East Timor (Indonesia)	439
Ebeye, Marshall Islands, United States (Domestic Mail)	See DMM 608
Ecuador	365
Egypt	367
Eire (Ireland)	446
El Salvador	369
Ellice Islands (Tuvalu)	666
Elobey Islands (Equatorial Guinea)	371
Enderbury Island (Kiribati)	466
England (Great Britain and Northern Ireland)	406
Equatorial Guinea	371
Eritrea	373
Estonia	375
Ethiopia	377
Fakaofo (Western Samoa)	689

Country Name	Page Number
Falkland Islands	379
Fanning Island (Kiribati)	466
Faroe Islands	380
Fernando Po (Equatorial Guinea)	371
Fezzan (Libya)	488
Fiji	382
Finland	384
Formosa (Taiwan)	640
France	386
Frederiksted, US Virgin Islands, United States (Domestic Mail)	See DMM 608
French Guiana	389
French Oceania (French Polynesia)	391
French Polynesia	391
French Somaliland (Djibouti)	359
French Territory of the Afars and Issas (Djibouti)	359
French West Indies (Guadeloupe)	416
French West Indies (Martinique)	515
Friendly Islands (Tonga)	650
Fujairah (United Arab Emirates)	672
Futuna (Wallis and Futuna Islands)	687
Gabon	393
Gambia	395
Gambier (French Polynesia)	391
Georgia, Republic of	397
Germany	399
Ghana	402
Gibraltar	404
Gilbert Islands (Kiribati)	466
Goa (India)	436
Gozo Island (Malta)	512
Grand Comoro (Comoros)	337
Great Britain and Northern Ireland	406
Greece	409
Greenland	412
Grenada	414
Grenadines (Saint Vincent and the Grenadines)	595
Guadeloupe	416
Guam, United States (Domestic Mail)	See DMM 608
Guatemala	418
Guernsey (Channel Islands) (Great Britain and Northern Ireland)	406
Guinea	420
Guinea-Bissau	422
Guyana	424
Hainan Island (China)	332
Haiti	426
Hashemite Kingdom (Jordan)	459
Hervey, Cook Islands (New Zealand)	548
Hivaoa (French Polynesia)	391
Holland (Netherlands)	541
Honduras	428
Hong Kong	430
Huahine (French Polynesia)	391

Country Name	Page Number
Huan Island (New Caledonia)	546
Hungary	432
Iceland	434
India	436
Indonesia	439
Iran	442
Iraq	444
Ireland	446
Irian Barat (Indonesia)	439
Isle of Man (Great Britain and Northern Ireland)	406
Isle of Pines (New Caledonia)	546
Isle of Pines, West Indies (Cuba)	349
Israel	449
Issas (Djibouti)	359
Italy	451
Ivory Coast (Cote d'Ivoire)	345
Jamaica	454
Japan	456
Jersey (Channel Islands) (Great Britain and Northern Ireland)	406
Johore (Malaysia)	506
Jordan	459
Kalymnos (Greece)	409
Kampuchea (Cambodia)	315
Karpathos (Greece)	409
Kassos (Greece)	409
Kastellorizon (Greece)	409
Kazakhstan	461
Kedah (Malaysia)	506
Keeling Islands (Australia)	266
Kelantan (Malaysia)	506
Kenya	464
Kingshill, US Virgin Islands, United States (Domestic Mail)	See DMM 608
Kiribati	466
Korea, Democratic People's Republic of (North Korea)	467
Korea, Republic of (South Korea)	468
Koror (Palau), United States (Domestic Mail)	See DMM 608
Kos (Greece)	409
Kosovo, Republic of	471
Kosrae, Micronesia, United States (Domestic Mail)	See DMM 608
Kowloon (Hong Kong)	430
Kuwait	473
Kwajalein, Marshall Islands, United States (Domestic Mail)	See DMM 608
Kyrgyzstan	475
Labrador (Canada)	319
Labuan (Malaysia)	506
Laos	478
Latvia	480
Lebanon	482
Leipsos (Greece)	409
Leros (Greece)	409
Les Saints Island (Guadeloupe)	416
Lesotho	484
Liberia	486
Libya	488
Liechtenstein	490
Lithuania	493
Lord Howe Island (Australia)	266
Loyalty Islands (New Caledonia)	546
Luxembourg	495
Macao	498
Macau (Macao)	498
Macedonia, Republic of	500
Madagascar	502
Madeira Islands (Portugal)	576
Majuro, Marshall Islands, United States (Domestic Mail)	See DMM 608
Malacca (Malaysia)	506
Malagasy Republic (Madagascar)	502
Malawi	504
Malaya (Malaysia)	506
Malaysia	506
Maldives	508
Mali	510
Malta	512
Manahiki (New Zealand)	548
Manchuria (China)	332
Manitoba (Canada)	319
Manua Islands, American Samoa, United States (Domestic Mail)	See DMM 608
Marie Galante (Guadeloupe)	416
Marquesas Islands (French Polynesia)	391
Marshall Islands, Republic of the, United States (Domestic Mail)	See DMM 608
Martinique	515
Mauritania	517
Mauritius	519
Mayotte (France)	386
Melilla (Spain)	623
Mexico	521
Micronesia, Federated States of, United States (Domestic Mail)	See DMM 608
Miquelon (Saint Pierre and Miquelon)	594
Moheli (Comoros)	337
Moldova	523
Monaco (France)	386
Mongolia	525
Montenegro	527
Montserrat	529
Moorea (French Polynesia)	391
Morocco	531
Mozambique	533
Muscat (Oman)	558
Myanmar (Burma)	311

Country Name	Page Number
Namibia	535
Nansil Islands (Japan)	456
Nauru	537
Negri Sembilan (Malaysia)	506
Nepal	539
Netherlands	541
Netherlands Antilles	544
Netherlands West Indies (Netherlands Antilles)	544
Nevis (Saint Christopher and Nevis)	589
New Britain (Papua New Guinea)	564
New Brunswick (Canada)	319
New Caledonia	546
New Hanover (Papua New Guinea)	564
New Hebrides (Vanuatu)	678
New Ireland (Papua New Guinea)	564
New South Wales (Australia)	266
New Zealand	548
Newfoundland (Canada)	319
Nicaragua	550
Niger	552
Nigeria	554
Nissiros (Greece)	409
Niue (New Zealand)	548
Norfolk Island (Australia)	266
North Borneo (Malaysia)	506
North Korea (Korea, Democratic People's Republic of)	467
Northern Ireland (Great Britain and Northern Ireland)	406
Northern Mariana Islands, Commonwealth of, United States (Domestic Mail)	See DMM 608
Northwest Territory (Canada)	319
Norway	556
Nova Scotia (Canada)	319
Nukahiva (French Polynesia)	391
Nukunonu (Western Samoa)	689
Nyasaland (Malawi)	504
Ocean Island (Kiribati)	466
Okinawa (Japan)	456
Oman	558
Ontario (Canada)	319
Pago Pago, American Samoa, United States (Domestic Mail)	See DMM 608
Pahang (Malaysia)	506
Pakistan	560
Palau, United States (Domestic Mail)	See DMM 608
Palmerston, Avarua (New Zealand)	548
Panama	562
Papua New Guinea	564
Paraguay	566
Parry, Cook Islands (New Zealand)	548
Patmos (Greece)	409
Pemba (Tanzania)	644
Penang (Malaysia)	506
Penghu Islands (Taiwan)	640
Penon de Velez de la Gomera (Spain)	623
Penrhyn, Tongareva (New Zealand)	548
Perak (Malaysia)	506
Perlis (Malaysia)	506
Persia (Iran)	442
Peru	568
Pescadores Islands (Taiwan)	640
Petite Terre (Guadeloupe)	416
Philippines	571
Pitcairn Island	573
Pohnpei, Micronesia, United States (Domestic Mail)	See DMM 608
Poland	574
Portugal	576
Prince Edward Island (Canada)	319
Province Wellesley (Malaysia)	506
Puerto Rico, United States (Domestic Mail)	See DMM 608
Pukapuka (New Zealand)	548
Qatar	578
Quebec (Canada)	319
Queensland (Australia)	266
Quemoy (Taiwan)	640
Raiatea (French Polynesia)	391
Rakaanga (New Zealand)	548
Rapa (French Polynesia)	391
Rarotonga, Cook Islands (New Zealand)	548
Ras al Kaimah (United Arab Emirates)	672
Redonda (Antigua and Barbuda)	256
Reunion	580
Rhodesia (Zimbabwe)	695
Rio Muni (Equatorial Guinea)	371
Rodos (Greece)	409
Rodrigues (Mauritius)	519
Romania	582
Rota, Northern Mariana Islands, United States (Domestic Mail)	See DMM 608
Russia	584
Rwanda	587
Saba (Netherlands Antilles)	544
Sabah (Malaysia)	506
Saint Barthelemy (Guadeloupe)	416
Saint Bartholomew (Guadeloupe)	416
Saint Christopher and Nevis	589
Saint Croix, US Virgin Islands, United States (Domestic Mail)	See DMM 608
Saint Eustatius (Netherlands Antilles)	544
Saint Helena	591
Saint John, US Virgin Islands, United States (Domestic Mail)	See DMM 608
Saint Kitts (Saint Christopher and Nevis)	589
Saint Lucia	592
Saint Maarten (Dutch) (Netherlands Antilles)	544
Saint Martin (French) (Guadeloupe)	416

Country Name	Page Number
Saint Pierre and Miquelon	594
Saint Thomas, US Virgin Islands, United States (Domestic Mail)	See DMM 608
Saint Vincent and the Grenadines	595
Sainte Marie de Madagascar (Madagascar)	502
Saipan, Northern Mariana Islands, United States (Domestic Mail)	See DMM 608
Salvador (El Salvador)	369
Samoa, American, United States (Domestic Mail)	See DMM 608
San Marino	597
Santa Cruz Islands (Solomon Island)	618
Sao Tome and Principe	600
Sarawak (Malaysia)	506
Sark (Channel Islands) (Great Britain and Northern Ireland)	406
Saskatchewan (Canada)	319
Saudi Arabia	601
Savage Island, Niue (New Zealand)	548
Savaii Island (Western Samoa)	689
Scotland (Great Britain and Northern Ireland)	406
Selangor (Malaysia)	506
Senegal	603
Serbia, Republic of	605
Seychelles	608
Sharja (United Arab Emirates)	672
Shikoku (Japan)	456
Siam (Thailand)	646
Sierra Leone	610
Sikkim (India)	436
Singapore	612
Slovak Republic (Slovakia)	614
Slovenia	616
Society Islands (French Polynesia)	391
Solomon Islands	618
Somali Democratic Republic (Somalia)	620
Somalia	620
Somaliland (Somalia)	620
South Africa	621
South Australia (Australia)	266
South Georgia (Falkland Islands)	379
South Korea (Korea, Republic of)	468
South-West Africa (Namibia)	535
Spain	623
Spitzbergen (Norway)	556
Sri Lanka	626
Sudan	628
Suriname	630
Suwarrow Islands (New Zealand)	548
Swain's Island, American Samoa, United States (Domestic Mail)	See DMM 608
Swan Islands (Honduras)	428
Swaziland	632
Sweden	634
Switzerland	636
Symi (Greece)	409
Syrian Arab Republic (Syria)	638
Tahaa (French Polynesia)	391
Tahiti (French Polynesia)	391
Taiwan	640
Tajikistan	642
Tanzania	644
Tasmania (Australia)	266
Tchad (Chad)	328
Thailand	646
Thursday Island (Australia)	266
Tibet (China)	332
Tilos (Greece)	409
Timor (Indonesia)	439
Tinian, Northern Mariana Islands, United States (Domestic Mail)	See DMM 608
Tobago (Trinidad and Tobago)	652
Togo	648
Tokelau (Union Group) (Western Samoa)	689
Tonga	650
Tongareva (New Zealand)	548
Tori Shima (Japan)	456
Torres Island (Vanuatu)	678
Trans-Jordan, Hashemite Kingdom (Jordan)	459
Transkei (South Africa)	621
Trengganu (Malaysia)	506
Trinidad and Tobago	652
Tripolitania (Libya)	488
Tristan da Cunha	654
Trucial States (United Arab Emirates)	672
Tuamotou (French Polynesia)	391
Tubuai (French Polynesia)	391
Tunisia	655
Turkey	658
Turkmenistan	661
Turks and Caicos Islands	664
Tutuila Island, American Samoa, United States (Domestic Mail)	See DMM 608
Tuvalu	666
Uganda	667
Ukraine	669
Umm al Quaiwain (United Arab Emirates)	672
Umm Said (Qatar)	578
Union Group (Western Samoa)	689
United Arab Emirates	672
United Kingdom (Great Britain and Northern Ireland)	406

Country Name	Page Number
United Nations, New York, United States (Domestic Mail)	See DMM 608
Upolu Island (Western Samoa)	689
Uruguay	674
Uzbekistan	676
Vanuatu	678
Vatican City	680
Venezuela	682
Victoria (Australia)	266
Vietnam	684
Virgin Islands (British)	303
Virgin Islands (US), United States (Domestic Mail)	See DMM 608
Wales (Great Britain and Northern Ireland)	406
Wallis and Futuna Islands	687
Wellesley, Province (Malaysia)	506
West New Guinea (Indonesia)	439
Western Australia (Australia)	266
Western Samoa	689
Yap, Micronesia, United States (Domestic Mail)	See DMM 608
Yemen	691
Yukon Territory (Canada)	319
Zafarani Islands (Spain)	623
Zambia	693
Zanzibar (Tanzania)	644
Zimbabwe	695

Country Name	Page Number

Country Price Groups and Weight Limits

Listed below are the countries and their price groups and weight limits for the four principal categories of international mail. Complete tables of prices and weights appear in the Individual Country Listings (ICLs).

n/a = Service is not available.

[1] Priority Mail International Flat Rate Service maximum weights: Flat Rate Envelopes and Small Flat Rate Priced Boxes, 4 lbs.; Medium and Large Flat Rate Boxes, 20 lbs.

[2] First-Class Mail International maximum weights: Letters, 3.5 ozs.; Large Envelopes (flats), 4 lbs.; Packages (small packets), 4 lbs. Note that the heading in the maximum weight column lists both ounces and pounds ("ozs. / lbs.") and that there are two numbers in the entry for each country ("3.5 / 4") — this indicates that the maximum weight for Letters is 3.5 ozs., and that the maximum weight for both Large Envelopes and Packages is 4 lbs.

[3] Ascension, Bolivia, and the Falkland Islands: Priority Mail International parcel services are not available. Priority Mail International Flat Rate Envelopes and Small Flat Rate Priced Boxes (maximum weight: 4 lbs. each) may be used.

[4] Cuba: Priority Mail International parcel services to Cuba are not available. Priority Mail International Flat Rate Envelopes and Small Flat Rate Priced Boxes (maximum weight: 4 lbs. each) may be used. Dutiable articles may not be mailed to Cuba except for gift parcels and humanitarian donations, which must comply with the requirements and restrictions published in 15 CFR § 740.12 (and which must not exceed 4 lbs.), and consumer communications devices, computers, and software, which must comply with the requirements and restrictions published in 15 CFR § 740.19 (and which must not exceed 4 lbs.). Potentially dutiable items may be confiscated upon entering Cuba or returned to sender.

[5] Korea, Democratic People's Republic of (North Korea): Priority Mail International parcel services are not available, including the Small Flat Rate Priced Boxes. Priority Mail International Flat Rate Envelopes (maximum weight: 4 lbs.) may be used. Dutiable items and merchandise are prohibited.

	Global Express Guaranteed		**Express Mail International**		**Priority Mail International [1]**		**First-Class Mail International**	
Country	**Price Group**	**Max. Wt. (lbs.)**	**Price Group**	**Max. Wt. (lbs.)**	**Price Group**	**Max. Wt. (lbs.)**	**Price Group**	**Max. Wt. [2] (ozs. / lbs.)**
Afghanistan	6	70	n/a	n/a	6	66	6	3.5 / 4
Albania	4	70	4	66	4	44	4	3.5 / 4
Algeria	4	70	8	44	8	44	8	3.5 / 4
Andorra	5	4	5	66	5	66	5	3.5 / 4
Angola	4	70	7	44	7	44	7	3.5 / 4
Anguilla	7	70	9	55	9	22	9	3.5 / 4
Antigua and Barbuda	7	70	n/a	n/a	9	22	9	3.5 / 4
Argentina	8	70	9	44	9	44	9	3.5 / 4
Armenia	4	70	4	44	4	44	4	3.5 / 4
Aruba	7	70	9	44	9	44	9	3.5 / 4
Ascension [3]	n/a	n/a	n/a	n/a	7	4	7	3.5 / 4
Australia	6	70	10	44	10	66	3	3.5 / 4
Austria	5	70	5	66	5	66	5	3.5 / 4
Azerbaijan	4	70	4	70	4	70	4	3.5 / 4
Bahamas	7	70	9	22	9	22	9	3.5 / 4
Bahrain	6	70	8	44	8	44	8	3.5 / 4

Country	Global Express Guaranteed		Express Mail International		Priority Mail International [1]		First-Class Mail International	
	Price Group	Max. Wt. (lbs.)	Price Group	Max. Wt. (lbs.)	Price Group	Max. Wt. (lbs.)	Price Group	Max. Wt. [2] (ozs. / lbs.)
Bangladesh	6	70	6	44	6	44	6	3.5 / 4
Barbados	7	70	9	66	9	44	9	3.5 / 4
Belarus	4	70	4	44	4	66	4	3.5 / 4
Belgium	3	70	5	66	5	66	5	3.5 / 4
Belize	8	70	9	66	9	44	9	3.5 / 4
Benin	4	70	7	66	7	66	7	3.5 / 4
Bermuda	7	70	9	44	9	44	9	3.5 / 4
Bhutan	6	70	6	66	6	66	6	3.5 / 4
Bolivia [3]	8	70	9	66	9	4	9	3.5 / 4
Bosnia-Herzegovina	4	70	4	66	4	44	4	3.5 / 4
Botswana	4	70	7	66	7	66	7	3.5 / 4
Brazil	8	70	15	66	15	66	9	3.5 / 4
British Virgin Islands	7	70	n/a	n/a	9	44	9	3.5 / 4
Brunei Darussalam	4	70	6	66	6	44	6	3.5 / 4
Bulgaria	4	70	4	66	4	70	4	3.5 / 4
Burkina Faso	4	70	7	70	7	66	7	3.5 / 4
Burma (Myanmar)	n/a	n/a	n/a	n/a	6	22	6	3.5 / 4
Burundi	4	70	7	66	7	66	7	3.5 / 4
Cambodia (Kampuchea)	8	70	6	66	6	66	6	3.5 / 4
Cameroon	4	70	7	44	7	66	7	3.5 / 4
Canada	1	70	1	66	1	66	1	3.5 / 4
Cape Verde	4	70	7	66	7	44	7	3.5 / 4
Cayman Islands	7	70	9	44	9	44	9	3.5 / 4
Central African Republic	n/a	n/a	7	66	7	66	7	3.5 / 4
Chad	4	70	7	66	7	44	7	3.5 / 4
Chile	8	70	9	66	9	44	9	3.5 / 4
China	6	70	14	66	14	66	3	3.5 / 4
Colombia	8	70	9	44	9	66	9	3.5 / 4
Comoros	n/a	n/a	n/a	n/a	7	44	7	3.5 / 4
Congo, Democratic Republic of the	4	66	7	66	7	66	7	3.5 / 4
Congo, Republic of the	4	70	7	66	7	44	7	3.5 / 4
Costa Rica	8	70	9	66	9	66	9	3.5 / 4
Cote d'Ivoire (Ivory Coast)	4	70	7	66	7	66	7	3.5 / 4
Croatia	4	70	4	66	4	66	4	3.5 / 4
Cuba [4]	n/a	n/a	n/a	n/a	9	4	9	3.5 / 4
Cyprus	6	70	4	70	4	70	4	3.5 / 4
Czech Republic	4	70	4	70	4	70	4	3.5 / 4
Denmark	5	70	5	66	5	66	5	3.5 / 4
Djibouti	4	70	7	44	7	44	7	3.5 / 4
Dominica	7	70	9	44	9	44	9	3.5 / 4
Dominican Republic	7	70	9	66	9	44	9	3.5 / 4

Country	Global Express Guaranteed		Express Mail International		Priority Mail International [1]		First-Class Mail International	
	Price Group	Max. Wt. (lbs.)	Price Group	Max. Wt. (lbs.)	Price Group	Max. Wt. (lbs.)	Price Group	Max. Wt. [2] (ozs. / lbs.)
Ecuador	8	70	9	66	9	66	9	3.5 / 4
Egypt	6	70	8	44	8	66	8	3.5 / 4
El Salvador	8	70	9	66	9	44	9	3.5 / 4
Equatorial Guinea	n/a	n/a	7	44	7	22	7	3.5 / 4
Eritrea	4	70	7	66	7	44	7	3.5 / 4
Estonia	4	70	4	66	4	70	4	3.5 / 4
Ethiopia	4	70	8	66	8	66	8	3.5 / 4
Falkland Islands [3]	n/a	n/a	n/a	n/a	9	4	9	3.5 / 4
Faroe Islands	5	70	5	44	5	70	5	3.5 / 4
Fiji	8	70	6	66	6	44	6	3.5 / 4
Finland	5	70	5	66	5	70	5	3.5 / 4
France	3	70	13	66	13	66	5	3.5 / 4
French Guiana	8	70	9	66	9	66	9	3.5 / 4
French Polynesia	4	70	6	66	6	66	6	3.5 / 4
Gabon	4	70	7	66	7	44	7	3.5 / 4
Gambia	4	70	n/a	n/a	7	66	7	3.5 / 4
Georgia, Republic of	4	70	4	66	4	44	4	3.5 / 4
Germany	3	70	16	66	16	70	5	3.5 / 4
Ghana	4	70	7	66	7	66	7	3.5 / 4
Gibraltar	4	70	n/a	n/a	5	44	5	3.5 / 4
Great Britain and Northern Ireland	3	70	11	66	11	66	5	3.5 / 4
Greece	5	70	5	66	5	44	5	3.5 / 4
Greenland	5	70	n/a	n/a	5	66	5	3.5 / 4
Grenada	7	70	9	66	9	44	9	3.5 / 4
Guadeloupe	7	70	9	66	9	66	9	3.5 / 4
Guatemala	8	70	9	66	9	44	9	3.5 / 4
Guinea	4	70	7	44	7	66	7	3.5 / 4
Guinea-Bissau	n/a	n/a	7	44	7	66	7	3.5 / 4
Guyana	8	70	9	66	9	44	9	3.5 / 4
Haiti	7	70	9	66	9	55	9	3.5 / 4
Honduras	8	70	9	44	9	44	9	3.5 / 4
Hong Kong	3	70	3	66	3	66	3	3.5 / 4
Hungary	4	70	4	66	4	44	4	3.5 / 4
Iceland	5	70	5	66	5	70	5	3.5 / 4
India	6	70	6	70	6	44	6	3.5 / 4
Indonesia	6	70	6	66	6	44	6	3.5 / 4
Iran	n/a	n/a	n/a	n/a	8	44	8	3.5 / 4
Iraq	6	70	8	44	8	44	8	3.5 / 4
Ireland	3	70	5	66	5	66	5	3.5 / 4
Israel	6	70	8	44	8	44	5	3.5 / 4
Italy	3	70	5	66	5	66	5	3.5 / 4

Country	Global Express Guaranteed		Express Mail International		Priority Mail International [1]		First-Class Mail International	
	Price Group	Max. Wt. (lbs.)	Price Group	Max. Wt. (lbs.)	Price Group	Max. Wt. (lbs.)	Price Group	Max. Wt. [2] (ozs. / lbs.)
Jamaica	7	70	9	66	9	22	9	3.5 / 4
Japan	3	70	12	66	12	66	3	3.5 / 4
Jordan	6	70	8	66	8	66	8	3.5 / 4
Kazakhstan	4	70	6	66	6	44	6	3.5 / 4
Kenya	4	70	7	70	7	70	7	3.5 / 4
Kiribati	n/a	n/a	n/a	n/a	6	44	6	3.5 / 4
Korea, Democratic People's Republic of (North Korea) [5]	n/a	n/a	n/a	n/a	6	4	6	3.5 / 4
Korea, Republic of (South Korea)	6	70	3	66	3	44	3	3.5 / 4
Kosovo, Republic of	4	70	n/a	n/a	5	70	5	3.5 / 4
Kuwait	6	70	8	66	8	66	8	3.5 / 4
Kyrgyzstan	4	70	6	66	6	44	6	3.5 / 4
Laos	8	70	6	66	6	44	6	3.5 / 4
Latvia	4	70	4	66	4	70	4	3.5 / 4
Lebanon	6	70	n/a	n/a	8	66	8	3.5 / 4
Lesotho	4	70	7	66	7	44	7	3.5 / 4
Liberia	4	70	7	44	7	44	7	3.5 / 4
Libya	4	70	n/a	n/a	8	44	8	3.5 / 4
Liechtenstein	5	70	5	66	5	66	5	3.5 / 4
Lithuania	4	70	4	70	4	70	4	3.5 / 4
Luxembourg	3	70	5	66	5	66	5	3.5 / 4
Macao	3	70	6	70	6	70	6	3.5 / 4
Macedonia (Republic of)	4	70	4	66	4	70	4	3.5 / 4
Madagascar	4	70	7	66	7	44	7	3.5 / 4
Malawi	4	70	7	44	7	66	7	3.5 / 4
Malaysia	6	70	6	66	6	66	6	3.5 / 4
Maldives	6	70	6	66	6	66	6	3.5 / 4
Mali	4	70	7	66	7	66	7	3.5 / 4
Malta	5	70	5	44	5	66	5	3.5 / 4
Martinique	7	70	9	66	9	66	9	3.5 / 4
Mauritania	4	70	7	66	7	44	7	3.5 / 4
Mauritius	4	70	7	66	7	44	7	3.5 / 4
Mexico	2	70	2	44	2	44	2	3.5 / 4
Moldova	4	70	4	70	4	70	4	3.5 / 4
Mongolia	4	70	6	66	6	66	6	3.5 / 4
Montenegro	4	70	n/a	n/a	5	70	5	3.5 / 4
Montserrat	7	70	n/a	n/a	9	44	9	3.5 / 4
Morocco	4	70	8	68	8	66	8	3.5 / 4
Mozambique	4	70	7	66	7	66	7	3.5 / 4
Namibia	4	70	7	22	7	44	7	3.5 / 4
Nauru	n/a	n/a	6	44	6	44	6	3.5 / 4

Country	Global Express Guaranteed		Express Mail International		Priority Mail International [1]		First-Class Mail International	
	Price Group	Max. Wt. (lbs.)	Price Group	Max. Wt. (lbs.)	Price Group	Max. Wt. (lbs.)	Price Group	Max. Wt. [2] (ozs. / lbs.)
Nepal	6	70	6	69	6	44	6	3.5 / 4
Netherlands	3	70	17	66	17	44	5	3.5 / 4
Netherlands Antilles	7	70	9	66	9	44	9	3.5 / 4
New Caledonia	8	70	6	66	6	66	6	3.5 / 4
New Zealand	6	70	10	66	10	66	6	3.5 / 4
Nicaragua	8	70	9	55	9	66	9	3.5 / 4
Niger	4	70	7	70	7	70	7	3.5 / 4
Nigeria	4	70	7	66	7	66	7	3.5 / 4
Norway	5	70	5	66	5	66	5	3.5 / 4
Oman	6	70	8	66	8	44	8	3.5 / 4
Pakistan	6	70	6	66	6	70	6	3.5 / 4
Panama	8	70	9	66	9	70	9	3.5 / 4
Papua New Guinea	8	70	6	55	6	44	6	3.5 / 4
Paraguay	8	70	9	55	9	66	9	3.5 / 4
Peru	8	70	9	70	9	70	9	3.5 / 4
Philippines	6	70	6	44	6	44	6	3.5 / 4
Pitcairn Island	n/a	n/a	n/a	n/a	6	22	6	3.5 / 4
Poland	4	70	4	44	4	44	4	3.5 / 4
Portugal	5	70	5	66	5	66	5	3.5 / 4
Qatar	6	70	8	66	8	70	8	3.5 / 4
Reunion	4	70	n/a	n/a	9	66	9	3.5 / 4
Romania	4	70	4	70	4	70	4	3.5 / 4
Russia	4	70	4	70	4	44	4	3.5 / 4
Rwanda	4	70	7	66	7	66	7	3.5 / 4
Saint Christopher and Nevis	7	70	9	66	9	44	9	3.5 / 4
Saint Helena	n/a	n/a	n/a	n/a	7	44	7	3.5 / 4
Saint Lucia	7	70	9	44	9	44	9	3.5 / 4
Saint Pierre and Miquelon	n/a	n/a	n/a	n/a	4	66	4	3.5 / 4
Saint Vincent and the Grenadines	7	70	9	44	9	22	9	3.5 / 4
San Marino	3	70	5	66	5	66	5	3.5 / 4
Sao Tome and Principe	n/a	n/a	n/a	n/a	7	44	7	3.5 / 4
Saudi Arabia	4	70	8	66	8	66	8	3.5 / 4
Senegal	4	70	7	66	7	66	7	3.5 / 4
Serbia, Republic of	4	70	5	66	5	70	5	3.5 / 4
Seychelles	4	70	7	66	7	70	7	3.5 / 4
Sierra Leone	n/a	n/a	7	66	7	66	7	3.5 / 4
Singapore	3	70	6	66	6	66	6	3.5 / 4
Slovak Republic (Slovakia)	4	70	5	66	5	66	5	3.5 / 4
Slovenia	4	70	5	66	5	66	5	3.5 / 4
Solomon Islands	n/a	n/a	6	66	6	44	6	3.5 / 4
Somalia	n/a	n/a	n/a	n/a	n/a	n/a	n/a	n/a

Country	Global Express Guaranteed		Express Mail International		Priority Mail International [1]		First-Class Mail International	
	Price Group	Max. Wt. (lbs.)	Price Group	Max. Wt. (lbs.)	Price Group	Max. Wt. (lbs.)	Price Group	Max. Wt. [2] (ozs. / lbs.)
South Africa	4	70	7	66	7	66	7	3.5 / 4
Spain	5	70	5	66	5	44	5	3.5 / 4
Sri Lanka	6	70	6	66	6	66	6	3.5 / 4
Sudan	n/a	n/a	7	66	7	44	7	3.5 / 4
Suriname	8	70	n/a	n/a	9	44	9	3.5 / 4
Swaziland	4	70	7	66	7	44	7	3.5 / 4
Sweden	5	70	5	66	5	66	5	3.5 / 4
Switzerland	5	70	5	66	5	66	5	3.5 / 4
Syrian Arab Republic (Syria)	n/a	n/a	8	44	8	70	8	3.5 / 4
Taiwan	3	70	6	33	6	44	6	3.5 / 4
Tajikistan	n/a	n/a	6	66	6	66	6	3.5 / 4
Tanzania	4	70	7	66	7	66	7	3.5 / 4
Thailand	6	70	6	66	6	66	6	3.5 / 4
Togo	4	70	7	66	7	70	7	3.5 / 4
Tonga	4	70	6	66	6	44	6	3.5 / 4
Trinidad and Tobago	7	70	9	66	9	44	9	3.5 / 4
Tristan da Cunha	n/a	n/a	n/a	n/a	7	22	7	3.5 / 4
Tunisia	4	70	8	66	8	66	8	3.5 / 4
Turkey	6	70	4	66	4	66	4	3.5 / 4
Turkmenistan	n/a	n/a	6	66	6	44	6	3.5 / 4
Turks and Caicos Islands	7	70	9	66	9	44	9	3.5 / 4
Tuvalu	n/a	n/a	n/a	n/a	6	55	6	3.5 / 4
Uganda	4	70	7	66	7	66	7	3.5 / 4
Ukraine	4	70	4	44	4	66	4	3.5 / 4
United Arab Emirates	6	70	8	70	8	70	8	3.5 / 4
Uruguay	8	70	9	44	9	66	9	3.5 / 4
Uzbekistan	4	70	6	66	6	70	6	3.5 / 4
Vanuatu	8	70	6	55	6	44	6	3.5 / 4
Vatican City	3	70	5	66	5	44	5	3.5 / 4
Venezuela	8	70	9	66	9	66	9	3.5 / 4
Vietnam	6	70	6	66	6	70	6	3.5 / 4
Wallis and Futuna Islands	4	70	n/a	n/a	6	66	6	3.5 / 4
Western Samoa	n/a	n/a	6	44	6	44	6	3.5 / 4
Yemen	6	70	8	66	8	66	8	3.5 / 4
Zambia	4	70	7	66	7	66	7	3.5 / 4
Zimbabwe	4	70	7	44	7	44	7	3.5 / 4

Afghanistan

Country Conditions for Mailing

Prohibitions (130)
Coins; banknotes; currency notes (paper money); securities payable to bearer; platinum, gold or silver, manufactured or not.
Infectious materials.
Perishable biological substances.
Radioactive materials.

Restrictions
Traveler's checks, precious stones, jewelry, and other valuable articles are admitted only in registered First-Class Mail International shipments.

Observations
First-Class Mail International shipments may not contain dutiable articles.

Customs Forms Required (123)
First-Class Mail International items and Priority Mail International Flat Rate Envelopes and Small Flat Rate Priced Boxes:
PS Form 2976 (see 123.61)
Priority Mail International parcels:
PS Form 2976-A inside 2976-E (envelope)

Global Express Guaranteed (210) Price Group 6

Refer to Notice 123, *Price List*, for the applicable retail, commercial base, or commercial plus price.
Weight Limit: 70 lbs.

Insurance (212.5)

Insured Amount not over	Fee	Insured Amount not over	Fee
$100	No Fee	For document reconstruction insurance or non-document insurance coverage above $800, add $1.00 per $100 or fraction thereof, up to a maximum of $2,499 per shipment.	
200	$1.00		
300	2.00		
400	3.00		
500	4.00		
600	5.00		
700	6.00		
800	7.00	$2,499 max.	$24.00

Value Limit (212.1)
The maximum value of a GXG shipment to this country is $2,499 or a lesser amount if limited by content or value.

Size Limits (211.22)
The surface area of the address side of the item to be mailed must be large enough to completely contain the Global Express Guaranteed Air Waybill/Shipping Invoice (shipping label), postage, endorsement, and any applicable markings. The shipping label is approximately 5.5 inches high and 9.5 inches long.
Maximum length: 46 inches
Maximum width: 35 inches
Maximum height: 46 inches
Maximum length and girth combined: 108 inches

General Conditions for Mailing
See Publication 141, *Global Express Guaranteed Service Guide,* for information about areas served in the destination country, allowable contents, packaging and labeling requirements, tracking and tracing, service standards, and other conditions for mailing.

Express Mail International (220)
Not Available

Priority Mail International (230) Price Group 6

Refer to Notice 123, *Price List*, for the applicable retail, commercial base, or commercial plus price.
Weight Limit: 66 lbs.

Note: *Ordinary Priority Mail International includes indemnity at no cost based on weight. (See 230.)*

Priority Mail International — Flat Rate
Flat Rate Envelopes or Small Flat Rate Priced Boxes: The maximum weight is 4 pounds. Refer to Notice 123, *Price List*, for the applicable retail, commercial base, or commercial plus price.

Flat Rate Boxes — Medium and Large: The maximum weight is 20 pounds, or the limit set by the individual country, whichever is less. Refer to Notice 123, *Price List*, for the retail, commercial base, or commercial plus price.

Insurance (232.92) NOT Available

Size Limits (231.22)
Maximum length: 42 inches
Maximum length and girth combined: 79 inches

First-Class Mail International (240) Price Group 6
For the prices and maximum weights for letters, large envelopes (flats), packages (small packets), and postcards, see Notice 123, *Price List*.

Size Limits
Letters: See 241.212
Postcards: See 241.221
Large Envelopes (Flats): See 241.232
Packages (Small Packets): See 241.242 and 241.243

Airmail M-bags (260) — Direct Sack to One Addressee Price Group 6

Refer to Notice 123, *Price List*, for the applicable retail, commercial base, or commercial plus price.
Weight Limit: 66 lbs.

Matter for the Blind (270)
Free when sent as First-Class Mail International, including Priority Mail International Flat Rate Envelopes and Small Flat Rate Priced Boxes. Weight limit: 4 pounds.
Free when sent as Priority Mail International. Weight limit: 15 pounds.

Extra Services

Certificate of Mailing (313)

Individual Pieces	Fee
Individual article (PS Form 3817)	$1.15
Firm mailing books (PS Form 3877), per article listed (minimum 3)	0.44
Duplicate copy of PS Form 3817 or PS Form 3877 (per page)	1.15
Bulk Quantities	**Fee**
First 1,000 pieces (or fraction thereof)	$6.70
Each additional 1,000 pieces (or fraction thereof)	0.80
Duplicate copy of PS Form 3606	1.15

COD and Certified

NOT for International Mail

International Business Reply Service (382)

Fee: Envelopes up to 2 ounces $1.50; Cards $1.00

International Postal Money Order (371)

NOT Available

International Reply Coupons (381)

Fee: $2.20

Registered Mail (330)

Fee: $11.75

Maximum Indemnity: $47.33
Available for First-Class Mail International, including postcards and Flat Rate Envelopes and Small Flat Rate Priced Boxes, and matter for the blind or other physically handicapped persons. Not applicable to M-bags.

Restricted Delivery (350)

NOT Available

Return Receipt (340)

Fee: $2.35

Available for registered mail only.

Albania

Country Conditions for Mailing

Prohibitions (130)

Currency of the Albanian State Bank (Banknotes in lek).
Extravagant clothes and other articles contrary to Albanians' taste.
Items sent by political emigres.
Literature, publications, and other articles prejudicial to the State public order.
Perishable infectious biological substances.
Perishable noninfectious biological substances.
Photographic films, including plates and paper intended for photography.
Publications containing obscene or indecent articles.
Radioactive materials.
Used articles.

Restrictions

Hunting arms require an import permit.
Medicines for personal use are admitted provided the addressee has a medical certificate.

Observations

1. First-Class Mail International shipments may not contain dutiable articles.
2. Priority Mail International service extends only to:

Berat	Konispol	Milot
Bilisht	Korce	Peqin
Delvine	(Coritoza)	Permet
Durres	Kruje	Peshkopi
(Durazzo)	Kucove	Puke
Elbasan	Kukes	Sarande
Fier	Kurvelesh	Shijak
Gjirokaster	Lesh (Alessio)	Shkoder
(Argirokastro)	Leskovik	(Scutari)
Himare	Libohove	Tepelene
Kavaje	Librazhd	Tirana
Klos	Lushnje	Vlore
Kolonje	Mallakaster	

Customs Forms Required (123)

First-Class Mail International items and Priority Mail International Flat Rate Envelopes and Small Flat Rate Priced Boxes:
PS Form 2976 (see 123.61)
Priority Mail International parcels:
PS Form 2976-A inside 2976-E (envelope)

Global Express Guaranteed (210) Price Group 4

Refer to Notice 123, *Price List*, for the applicable retail, commercial base, or commercial plus price.
Weight Limit: 70 lbs.

Insurance (212.5)

Insured Amount not over	Fee	Insured Amount not over	Fee
$100	No Fee	For document reconstruction insurance or non-document insurance coverage above $800, add $1.00 per $100 or fraction thereof, up to a maximum of $2,499 per shipment.	
200	$1.00		
300	2.00		
400	3.00		
500	4.00		
600	5.00		
700	6.00		
800	7.00	$2,499 max.	$24.00

Value Limit (212.1)

The maximum value of a GXG shipment to this country is $2,499 or a lesser amount if limited by content or value.

Size Limits (211.22)

The surface area of the address side of the item to be mailed must be large enough to completely contain the Global Express Guaranteed Air Waybill/Shipping Invoice (shipping label), postage, endorsement, and any applicable markings. The shipping label is approximately 5.5 inches high and 9.5 inches long.
Maximum length: 46 inches
Maximum width: 35 inches
Maximum height: 46 inches
Maximum length and girth combined: 108 inches

General Conditions for Mailing

See Publication 141, *Global Express Guaranteed Service Guide,* for information about areas served in the destination country, allowable contents, packaging and labeling requirements, tracking and tracing, service standards, and other conditions for mailing.

Express Mail International (220) Price Group 4

Refer to Notice 123, *Price List*, for the applicable retail, commercial base, or commercial plus price.
Weight Limit: 66 lbs.

Express Mail International — Flat Rate Envelope and Flat Rate Boxes

The maximum weight for the Express Mail International Flat Rate Envelope and the Express Mail International Flat Rate Boxes is 20 pounds. Refer to Notice 123, *Price List*, for the applicable retail, commercial base, or commercial plus price.

Insurance (222.8)

Available for **Express Mail International merchandise shipments** only

Insured Amount not over	Fee	Insured Amount not over	Fee
$100	No Fee	For insurance coverage above $2,000, add $1.50 for each $500 or fraction thereof, up to a maximum of $5,000 per shipment.	
200	$0.85		
500	2.35		
1,000	3.85		
1,500	5.35		
2,000	6.85	$5,000 max.	$15.85

Articles Admitted	Required Customs Form/Endorsement
Correspondence and business papers.	PS Form 2976, *Customs — CN 22 and Sender's Declaration.* Endorse item clearly next to mailing label as BUSINESS PAPERS.
Merchandise samples without commercial value and not subject to customs duty.	PS Form 2976, *Customs — CN 22 and Sender's Declaration.*
Merchandise and all articles subject to customs duty.	PS Form 2976-A, *Customs Declaration and Dispatch Note CP 72,* inside a PS Form 2976-E, *Customs Declaration Envelope CP 91.* Include a commercial invoice in each item.

Size Limits (221.52)
Maximum length: 36 inches
Maximum length and girth combined: 79 inches

Notes:
1. Postal employees must tell customers that there is no service guarantee on any Express Mail International item.
2. Items are delivered Monday through Saturday. There is no delivery on Sunday or national holidays.
3. All items admissable in international mail to Albania including correspondence, business papers, and merchandise, are accepted in Express Mail International. See the Country Conditions for Mailing for Albania for specific prohibitions and restrictions.
4. Coins; banknotes; currency notes, including paper money; securities of any kind payable to bearer; traveler's checks; platinum, gold, and silver; precious stones; jewelry; watches; and other valuable articles are prohibited in Express Mail International shipments. All items prohibited in regular international mail are also prohibited in Express Mail International to Albania.

Reciprocal Service Name: EMS

Country Code: AL

Areas Served: Tirana

Priority Mail International (230) Price Group 4

Refer to Notice 123, *Price List*, for the applicable retail, commercial base, or commercial plus price.
Weight Limit: 44 lbs.

Note: *Ordinary Priority Mail International includes indemnity at no cost based on weight. (See 230.)*

Priority Mail International — Flat Rate
Flat Rate Envelopes or Small Flat Rate Priced Boxes: The maximum weight is 4 pounds. Refer to Notice 123, *Price List*, for the applicable retail, commercial base, or commercial plus price.

Flat Rate Boxes — Medium and Large: The maximum weight is 20 pounds, or the limit set by the individual country, whichever is less. Refer to Notice 123, *Price List*, for the retail, commercial base, or commercial plus price.

Insurance (232.92) NOT Available

Size Limits (231.22)
Maximum length: 42 inches
Maximum length and girth combined: 79 inches

First-Class Mail International (240) Price Group 4
For the prices and maximum weights for letters, large envelopes (flats), packages (small packets), and postcards, see Notice 123, *Price List*.

Size Limits
Letters: See 241.212
Postcards: See 241.221
Large Envelopes (Flats): See 241.232
Packages (Small Packets): See 241.242 and 241.243

Airmail M-bags (260) — Direct Sack to One Addressee Price Group 4

Refer to Notice 123, *Price List*, for the applicable retail, commercial base, or commercial plus price.
Weight Limit: 66 lbs.

Matter for the Blind (270)
Free when sent as First-Class Mail International, including Priority Mail International Flat Rate Envelopes and Small Flat Rate Priced Boxes. Weight limit: 4 pounds.
Free when sent as Priority Mail International. Weight limit: 15 pounds.

Extra Services

Certificate of Mailing (313)

Individual Pieces	Fee
Individual article (PS Form 3817)	$1.15
Firm mailing books (PS Form 3877), per article listed (minimum 3)	0.44
Duplicate copy of PS Form 3817 or PS Form 3877 (per page)	1.15
Bulk Quantities	**Fee**
First 1,000 pieces (or fraction thereof)	$6.70
Each additional 1,000 pieces (or fraction thereof)	0.80
Duplicate copy of PS Form 3606	1.15

COD and Certified **NOT** for International Mail

International Business Reply Service (382)
Fee: Envelopes up to 2 ounces $1.50; Cards $1.00

International Postal Money Order (371)
Use MO Form MP1
Maximum Amount Available: $700 **Fee:** $4.45
Money Order Inquiry: **Fee:** $5.50

International Reply Coupons (381) **Fee:** $2.20

Registered Mail (330) **Fee:** $11.75
Maximum Indemnity: $47.33
Available for First-Class Mail International, including postcards and Flat Rate Envelopes and Small Flat Rate Priced Boxes, and matter for the blind or other physically handicapped persons. Not applicable to M-bags.

Restricted Delivery (350) **Fee:** $4.55
Available for registered mail with a return receipt.
Endorsements: A remettre en main propre.
Per t'u dorezuar ne doren e vet.

Return Receipt (340) **Fee:** $2.35
Available for registered mail only.

Algeria

Country Conditions for Mailing

Prohibitions (130)

Articles made of tortoise-shell, mother of pearl, ivory, bone meerschaum and amber (succin), natural or reconstructed, worked jade and mineral substances similar to jade.
Canned vegetables, fish, plums and nuts.
Funeral urns.
Household articles made of tin.
Perishable infectious biological substances.
Perishable noninfectious biological substances.
Pictures and printed matter of pornographic or immoral nature, or which tend to incite crime or juvenile delinquency.
Radioactive materials.
Saccharine in tablets or packets.
Used clothing, accessories, blankets, linen, textile furnishings, footwear and headwear.
Watches and clocks.

Restrictions

Articles of gold or platinum, jewelry and precious stones must be licensed by the Algerian Ministry of Finance.
Coins, banknotes, negotiable securities, checks and other instruments of payment, may only be imported by the Central Bank of Algeria or approved intermediary banks.
Medicines for human or veterinary use, dietetic products, serums, vaccines and similar produce; medical, surgical, and dental instruments and prostheses require prior approval from the Ministry of Public Health and subject to the visa of the Central Algerian Pharmacy.

Observations

Import permits or licenses are required for many types of goods; therefore, the sender should ascertain from the addressee before mailing whether the necessary documents are held.

Customs Forms Required (123)

First-Class Mail International items and Priority Mail International Flat Rate Envelopes and Small Flat Rate Priced Boxes:
PS Form 2976 (see 123.61)
Priority Mail International parcels:
PS Form 2976-A inside 2976-E (envelope)

Global Express Guaranteed (210) Price Group 4

Refer to Notice 123, *Price List*, for the applicable retail, commercial base, or commercial plus price.
Weight Limit: 70 lbs.

Insurance (212.5)

Insured Amount not over	Fee	Insured Amount not over	Fee
$100	No Fee	For document reconstruction insurance or non-document insurance coverage above $800, add $1.00 per $100 or fraction thereof, up to a maximum of $2,499 per shipment.	
200	$1.00		
300	2.00		
400	3.00		
500	4.00		
600	5.00		
700	6.00		
800	7.00	$2,499 max.	$24.00

Value Limit (212.1)

The maximum value of a GXG shipment to this country is $2,499 or a lesser amount if limited by content or value.

Size Limits (211.22)

The surface area of the address side of the item to be mailed must be large enough to completely contain the Global Express Guaranteed Air Waybill/Shipping Invoice (shipping label), postage, endorsement, and any applicable markings. The shipping label is approximately 5.5 inches high and 9.5 inches long.
Maximum length: 46 inches
Maximum width: 35 inches
Maximum height: 46 inches
Maximum length and girth combined: 108 inches

General Conditions for Mailing

See Publication 141, *Global Express Guaranteed Service Guide,* for information about areas served in the destination country, allowable contents, packaging and labeling requirements, tracking and tracing, service standards, and other conditions for mailing.

Express Mail International (220) Price Group 8

Refer to Notice 123, *Price List*, for the applicable retail, commercial base, or commercial plus price.
Weight Limit: 44 lbs.

Express Mail International — Flat Rate Envelope and Flat Rate Boxes

The maximum weight for the Express Mail International Flat Rate Envelope and the Express Mail International Flat Rate Boxes is 20 pounds. Refer to Notice 123, *Price List*, for the applicable retail, commercial base, or commercial plus price.

Insurance (222.8)

Available for **Express Mail International merchandise shipments** only

Insured Amount not over	Fee	Insured Amount not over	Fee
$100	No Fee	For insurance coverage above $2,000, add $1.50 for each $500 or fraction thereof, up to a maximum of $5,000 per shipment.	
200	$0.85		
500	2.35		
1,000	3.85		
1,500	5.35		
2,000	6.85	$5,000 max.	$15.85

Articles Admitted	Required Customs Form/Endorsement
Correspondence and business papers.	PS Form 2976, *Customs — CN 22 and Sender's Declaration.* Endorse item clearly next to mailing label as BUSINESS PAPERS.
Merchandise samples without commercial value and not subject to customs duty.	PS Form 2976, *Customs — CN 22 and Sender's Declaration.*
Merchandise and all articles subject to customs duty.	PS Form 2976-A, *Customs Declaration and Dispatch Note CP 72,* inside a PS Form 2976-E, *Customs Declaration Envelope CP 91.* Include a commercial invoice in each item.

Size Limits (221.52)

Maximum length: 36 inches
Maximum length and girth combined: 79 inches

Note:
Coins; banknotes; currency notes, including paper money; securities of any kind payable to bearer; traveler's checks; platinum, gold, and silver; precious stones; jewelry; watches; and other valuable articles are prohibited in Express Mail International shipments. All items prohibited in regular international mail are also prohibited in Express Mail International to Algeria.

Reciprocal Service Name: EMS

Country Code: DZ

Areas Served: See the following list for areas served.

Adrar RP
Ain Benian
Ain Defla RP
Ain Smara
Ain Temouchent RP
Alger aeroport Express Mail International
Alger Didouche Mourad
Alger RP
Algiers and suburbs, as well as all main towns of Wilaya (department)
Annaba aeroport Express Mail International
Annaba Amirouche
Annaba-Menadia
Annaba RP
Arzew
Batna RP
Bechar RP
Bejaia RP
Berrahal (Annaba)
Bilda RP
Biskra RP
Bordj Bou Arreridj RP
Bordj Bounaam
Bouira RP
Bou Ismail
Boumerdes RP
Cheraga
Chlef RP
Constantine aeroport Express Mail International
Constentine Daksi
Constantine RP
Constantine Sidi Mabrouk
Dar El Beida
Didouche Mourad
Djelfa RP
Douera
El Attaf
El Bayadh RP
El-Biar
El Hadjar (Annaba)
El Harrach
El Khroub
El Khroub Djeffal Amar
El Madania
El Oued RP
El Tarf RP
Fouka
Ghardaia RP
Guelma RP
Haasi Messaoud
Hadjout
Haidra
Hamma Bouziane
Hussein-Dey
In Amenas
Jijel RP
Kais
Khemisti
Khenchela RP
Kolea
Kouba
Laghouat RP
Lardjen
Layoune
Mascara RP
Medea RP
Mila RP
Mostaganem RP
MSila RP
Naama RP
Oran
Oran aeroport Express Mail International
Oum El Bouaghi RP
Relizane RP
Rouiba
Saida RP
Setif RP
Sidi Bel Abbes-Sidi Yacine
Skikda RP
Souk Ahras RP
Staoueli
Tamanrasset RP
Tebessa RP
Theniet El Had
Tiaret RP
Tindouf RP
Tipaza RP
Tissemsilt RP
Tizi Ouzou RP
Tlemcen RP
Zeralda
Zighout Youcef

Priority Mail International (230) Price Group 8

Refer to Notice 123, *Price List*, for the applicable retail, commercial base, or commercial plus price.
Weight Limit: 44 lbs.

Note: *Ordinary Priority Mail International includes indemnity at no cost based on weight. (See 230.)*

Priority Mail International — Flat Rate

Flat Rate Envelopes or Small Flat Rate Priced Boxes: The maximum weight is 4 pounds. Refer to Notice 123, *Price List*, for the applicable retail, commercial base, or commercial plus price.

Flat Rate Boxes — Medium and Large: The maximum weight is 20 pounds, or the limit set by the individual country, whichever is less. Refer to Notice 123, *Price List*, for the retail, commercial base, or commercial plus price.

Insurance (232.92) NOT Available

Size Limits (231.22)

Maximum length: 42 inches
Maximum length and girth combined: 79 inches

First-Class Mail International (240) Price Group 8

For the prices and maximum weights for letters, large envelopes (flats), packages (small packets), and postcards, see Notice 123, *Price List*.

Size Limits

Letters: See 241.212
Postcards: See 241.221
Large Envelopes (Flats): See 241.232
Packages (Small Packets): See 241.242 and 241.243

Airmail M-bags (260) — Direct Sack to One Addressee Price Group 8

Refer to Notice 123, *Price List*, for the applicable retail, commercial base, or commercial plus price.
Weight Limit: 66 lbs.

Matter for the Blind (270)

Free when sent as First-Class Mail International, including Priority Mail International Flat Rate Envelopes and Small Flat Rate Priced Boxes. Weight limit: 4 pounds.
Free when sent as Priority Mail International. Weight limit: 15 pounds.

Extra Services

Certificate of Mailing (313)

Individual Pieces	**Fee**
Individual article (PS Form 3817)	$1.15
Firm mailing books (PS Form 3877), per article listed (minimum 3)	0.44
Duplicate copy of PS Form 3817 or PS Form 3877 (per page)	1.15
Bulk Quantities	**Fee**
First 1,000 pieces (or fraction thereof)	$6.70
Each additional 1,000 pieces (or fraction thereof)	0.80
Duplicate copy of PS Form 3606	1.15

COD and Certified **NOT** for International Mail

International Business Reply Service (382)

Fee: Envelopes up to 2 ounces $1.50; Cards $1.00

International Postal Money Order (371)

NOT Available

International Reply Coupons (381) **Fee:** $2.20

Registered Mail (330) **Fee:** $11.75

Maximum Indemnity: $47.33
Available for First-Class Mail International, including postcards and Flat Rate Envelopes and Small Flat Rate Priced Boxes, and matter for the blind or other physically handicapped persons. Not applicable to M-bags.

Restricted Delivery (350) NOT Available

Return Receipt (340) **Fee:** $2.35

Available for registered mail only.

Andorra

Country Conditions for Mailing

Prohibitions (130)
Arms and weapons.
Human remains.
Live plants and animals.

Restrictions
No list furnished.

Observations
1. A parcel may be addressed to a street address or to a post office box. A local telephone number for the addressee should be provided when the item is addressed to a street address and must be provided when the item is addressed to a post office box.
2. For parcels, an invoice, in duplicate, is required for all commercial shipments regardless of value and all personal shipments valued at $300 or more. The invoices must be affixed to the outside of the parcel or may be enclosed in PS Form 2976-E with the customs declaration.

Customs Forms Required (123)
First-Class Mail International items and Priority Mail International Flat Rate Envelopes and Small Flat Rate Priced Boxes:
PS Form 2976 (see 123.61)
Priority Mail International parcels:
PS Form 2976-A inside 2976-E (envelope)

Global Express Guaranteed (210) Price Group 5
Note: A GXG shipment to this country may contain documents only — non-document items are prohibited.

Refer to Notice 123, *Price List*, for the applicable retail, commercial base, or commercial plus price.
Weight Limit: 4 lbs.

Insurance (212.5)

Insured Amount not over	Fee	Insured Amount not over	Fee
$100	No Fee	For document reconstruction insurance coverage above $800, add $1.00 per $100 or fraction thereof, up to a maximum of $2,499 per shipment.	
200	$1.00		
300	2.00		
400	3.00		
500	4.00		
600	5.00		
700	6.00		
800	7.00	$2,499 max.	$24.00

Value Limit (212.1)
The maximum value of a GXG shipment to this country is $2,499 or a lesser amount if limited by content or value.

Size Limits (211.22)
The surface area of the address side of the item to be mailed must be large enough to completely contain the Global Express Guaranteed Air Waybill/Shipping Invoice (shipping label), postage, endorsement, and any applicable markings. The shipping label is approximately 5.5 inches high and 9.5 inches long.
Maximum length: 46 inches
Maximum width: 35 inches
Maximum height: 46 inches
Maximum length and girth combined: 108 inches

General Conditions for Mailing
See Publication 141, *Global Express Guaranteed Service Guide,* for information about areas served in the destination country, allowable contents, packaging and labeling requirements, tracking and tracing, service standards, and other conditions for mailing.

Express Mail International (220) Price Group 5

Refer to Notice 123, *Price List*, for the applicable retail, commercial base, or commercial plus price.
Weight Limit: 66 lbs.

Express Mail International — Flat Rate Envelope and Flat Rate Boxes
The maximum weight for the Express Mail International Flat Rate Envelope and the Express Mail International Flat Rate Boxes is 20 pounds. Refer to Notice 123, *Price List*, for the applicable retail, commercial base, or commercial plus price.

Insurance (222.8)
Available for **Express Mail International merchandise shipments** only

Insured Amount not over	Fee	Insured Amount not over	Fee
$100	No Fee	For insurance coverage above $2,000, add $1.50 for each $500 or fraction thereof, up to a maximum of $5,000 per shipment.	
200	$0.85		
500	2.35		
1,000	3.85		
1,500	5.35		
2,000	6.85	$5,000 max.	$15.85

Articles Admitted	Required Customs Form/Endorsement
Correspondence and business papers.	PS Form 2976, *Customs — CN 22 and Sender's Declaration.* Endorse item clearly next to mailing label as BUSINESS PAPERS.
Merchandise samples without commercial value and not subject to customs duty.	PS Form 2976, *Customs — CN 22 and Sender's Declaration.*
Merchandise and all articles subject to customs duty.	PS Form 2976-A, *Customs Declaration and Dispatch Note CP 72,* inside a PS Form 2976-E, *Customs Declaration Envelope CP 91.* Include a commercial invoice in each item.

Size Limits (221.52)
Maximum length: 60 inches
Maximum length and girth combined: 108 inches

Note:
Coins; banknotes; currency notes, including paper money; securities of any kind payable to bearer; traveler's checks; platinum, gold, and silver; precious stones; jewelry; watches; and other valuable articles are prohibited in Express Mail International shipments. All items prohibited in regular international mail are also prohibited in Express Mail International to Andorra.

Reciprocal Service Name: Postal Express

Country Code: AD

Areas Served: All

Priority Mail International (230) Price Group 5

Refer to Notice 123, *Price List*, for the applicable retail, commercial base, or commercial plus price.
Weight Limit: 66 lbs.

Note: *Ordinary Priority Mail International includes indemnity at no cost based on weight. (See 230.)*

Priority Mail International — Flat Rate
Flat Rate Envelopes or Small Flat Rate Priced Boxes: The maximum weight is 4 pounds. Refer to Notice 123, *Price List*, for the applicable retail, commercial base, or commercial plus price.

Flat Rate Boxes — Medium and Large: The maximum weight is 20 pounds, or the limit set by the individual country, whichever is less. Refer to Notice 123, *Price List*, for the retail, commercial base, or commercial plus price.

Insurance (232.92)
Available for **Priority Mail International merchandise parcels** only (see 323.72 for markings)

Insured Amount not over	Fee	Insured Amount not over	Fee
$50	$2.45		
100	3.60	Add $1.15 for each additional $100 or fraction of insurance coverage.	
200	4.75		
300	5.90		
400	7.05		
500	8.20	$5,000 max.	$59.95

Size Limits (231.22)
Maximum length: 60 inches
Maximum length and girth combined: 108 inches

First-Class Mail International (240) Price Group 5
For the prices and maximum weights for letters, large envelopes (flats), packages (small packets), and postcards, see Notice 123, *Price List*.

Size Limits
Letters: See 241.212
Postcards: See 241.221
Large Envelopes (Flats): See 241.232
Packages (Small Packets): See 241.242 and 241.243

Airmail M-bags (260) — Direct Sack to One Addressee Price Group 5

Refer to Notice 123, *Price List*, for the applicable retail, commercial base, or commercial plus price.
Weight Limit: 66 lbs.

Matter for the Blind (270)
Free when sent as First-Class Mail International, including Priority Mail International Flat Rate Envelopes and Small Flat Rate Priced Boxes. Weight limit: 4 pounds.
Free when sent as Priority Mail International. Weight limit: 15 pounds.

Extra Services

Certificate of Mailing (313)

Individual Pieces	Fee
Individual article (PS Form 3817)	$1.15
Firm mailing books (PS Form 3877), per article listed (minimum 3)	0.44
Duplicate copy of PS Form 3817 or PS Form 3877 (per page)	1.15
Bulk Quantities	**Fee**
First 1,000 pieces (or fraction thereof)	$6.70
Each additional 1,000 pieces (or fraction thereof)	0.80
Duplicate copy of PS Form 3606	1.15

COD and Certified **NOT** for International Mail

International Business Reply Service (382)
Fee: Envelopes up to 2 ounces $1.50; Cards $1.00

International Postal Money Order (371)
NOT Available

International Reply Coupons (381) **Fee:** $2.20

Registered Mail (330) **Fee:** $11.75
Maximum Indemnity: $47.33
Available for First-Class Mail International, including postcards and Flat Rate Envelopes and Small Flat Rate Priced Boxes, and matter for the blind or other physically handicapped persons. Not applicable to M-bags.

Restricted Delivery (350) NOT Available

Return Receipt (340) **Fee:** $2.35
Available for registered mail and insured Priority Mail International parcels only.

Angola

Country Conditions for Mailing

Prohibitions (130)
Arms, ammunition.
Banknotes, currency (paper money), and coins unless addressed to the National Bank of Angola.
Books, printed matter, films and drawings prejudicial to the law of the country.
Perishable infectious biological substances.
Radioactive materials.
Roulette and other apparatus for games.
Tobacco.

Restrictions
Patent medicines are admitted only under permit issued by the Angola Department of Health.

Observations
None

Customs Forms Required (123)
First-Class Mail International items and Priority Mail International Flat Rate Envelopes and Small Flat Rate Priced Boxes:
PS Form 2976 (see 123.61)
Priority Mail International parcels:
PS Form 2976-A inside 2976-E (envelope)

Global Express Guaranteed (210) Price Group 4

Refer to Notice 123, *Price List*, for the applicable retail, commercial base, or commercial plus price.
Weight Limit: 70 lbs.

Insurance (212.5)

Insured Amount not over	Fee	Insured Amount not over	Fee
$100	No Fee	For document reconstruction insurance or non-document insurance coverage above $800, add $1.00 per $100 or fraction thereof, up to a maximum of $2,499 per shipment.	
200	$1.00		
300	2.00		
400	3.00		
500	4.00		
600	5.00		
700	6.00		
800	7.00	$2,499 max.	$24.00

Value Limit (212.1)
The maximum value of a GXG shipment to this country is $2,499 or a lesser amount if limited by content or value.

Size Limits (211.22)
The surface area of the address side of the item to be mailed must be large enough to completely contain the Global Express Guaranteed Air Waybill/Shipping Invoice (shipping label), postage, endorsement, and any applicable markings. The shipping label is approximately 5.5 inches high and 9.5 inches long.
Maximum length: 46 inches
Maximum width: 35 inches
Maximum height: 46 inches
Maximum length and girth combined: 108 inches

General Conditions for Mailing
See Publication 141, *Global Express Guaranteed Service Guide,* for information about areas served in the destination country, allowable contents, packaging and labeling requirements, tracking and tracing, service standards, and other conditions for mailing.

Express Mail International (220) Price Group 7

Refer to Notice 123, *Price List*, for the applicable retail, commercial base, or commercial plus price.
Weight Limit: 44 lbs.

Express Mail International — Flat Rate Envelope and Flat Rate Boxes
The maximum weight for the Express Mail International Flat Rate Envelope and the Express Mail International Flat Rate Boxes is 20 pounds. Refer to Notice 123, *Price List*, for the applicable retail, commercial base, or commercial plus price.

Insurance (222.8)
Available for **Express Mail International merchandise shipments** only

Insured Amount not over	Fee	Insured Amount not over	Fee
$100	No Fee	For insurance coverage above $2,000, add $1.50 for each $500 or fraction thereof, up to a maximum of $5,000 per shipment.	
200	$0.85		
500	2.35		
1,000	3.85		
1,500	5.35		
2,000	6.85	$5,000 max.	$15.85

Articles Admitted	Required Customs Form/Endorsement
Correspondence and business papers.	PS Form 2976, *Customs — CN 22 and Sender's Declaration.* Endorse item clearly next to mailing label as BUSINESS PAPERS.
Merchandise samples without commercial value and not subject to customs duty.	PS Form 2976, *Customs — CN 22 and Sender's Declaration.*
Merchandise and all articles subject to customs duty.	PS Form 2976-A, *Customs Declaration and Dispatch Note CP 72,* inside a PS Form 2976-E, *Customs Declaration Envelope CP 91.* Include a commercial invoice in each item.

Size Limits (221.52)
Maximum length: 36 inches
Maximum length and girth combined: 79 inches

Note:
Coins; banknotes; currency notes, including paper money; securities of any kind payable to bearer; traveler's checks; platinum, gold, and silver; precious stones; jewelry; watches; and other valuable articles are prohibited in Express Mail International shipments. All items prohibited in regular international mail are also prohibited in Express Mail International to Angola.

Reciprocal Service Name: EMS

Country Code: AO

Areas Served: All

Priority Mail International (230) Price Group 7

Refer to Notice 123, *Price List*, for the applicable retail, commercial base, or commercial plus price.
Weight Limit: 44 lbs.

Note: *Ordinary Priority Mail International includes indemnity at no cost based on weight. (See 230.)*

Priority Mail International — Flat Rate

Flat Rate Envelopes or Small Flat Rate Priced Boxes: The maximum weight is 4 pounds. Refer to Notice 123, *Price List*, for the applicable retail, commercial base, or commercial plus price.

Flat Rate Boxes — Medium and Large: The maximum weight is 20 pounds, or the limit set by the individual country, whichever is less. Refer to Notice 123, *Price List*, for the retail, commercial base, or commercial plus price.

Insurance (232.92) NOT Available

Size Limits (231.22)

Maximum length: 42 inches
Maximum length and girth combined: 79 inches

First-Class Mail International (240) Price Group 7

For the prices and maximum weights for letters, large envelopes (flats), packages (small packets), and postcards, see Notice 123, *Price List*.

Size Limits

Letters: See 241.212
Postcards: See 241.221
Large Envelopes (Flats): See 241.232
Packages (Small Packets): See 241.242 and 241.243

Airmail M-bags (260) — Direct Sack to One Addressee Price Group 7

Refer to Notice 123, *Price List*, for the applicable retail, commercial base, or commercial plus price.
Weight Limit: 66 lbs.

Matter for the Blind (270)

Free when sent as First-Class Mail International, including Priority Mail International Flat Rate Envelopes and Small Flat Rate Priced Boxes. Weight limit: 4 pounds.
Free when sent as Priority Mail International. Weight limit: 15 pounds.

Extra Services

Certificate of Mailing (313)

Individual Pieces	Fee
Individual article (PS Form 3817)	$1.15
Firm mailing books (PS Form 3877), per article listed (minimum 3)	0.44
Duplicate copy of PS Form 3817 or PS Form 3877 (per page)	1.15
Bulk Quantities	**Fee**
First 1,000 pieces (or fraction thereof)	$6.70
Each additional 1,000 pieces (or fraction thereof)	0.80
Duplicate copy of PS Form 3606	1.15

COD and Certified **NOT** for International Mail

International Business Reply Service (382)

Fee: Envelopes up to 2 ounces $1.50; Cards $1.00

International Postal Money Order (371)

NOT Available

International Reply Coupons (381) **Fee:** $2.20

Registered Mail (330) **Fee:** $11.75

Maximum Indemnity: $47.33
Available for First-Class Mail International, including postcards and Flat Rate Envelopes and Small Flat Rate Priced Boxes, and matter for the blind or other physically handicapped persons. Not applicable to M-bags.

Restricted Delivery (350) NOT Available

Return Receipt (340) **Fee:** $2.35

Available for registered mail only.

Anguilla

Country Conditions for Mailing

Prohibitions (130)
Perishable infectious biological substances.
Perishable noninfectious biological substances.
Radioactive materials.

Restrictions
No list furnished.

Observations
None

Customs Forms Required (123)
First-Class Mail International items and Priority Mail International Flat Rate Envelopes and Small Flat Rate Priced Boxes:
PS Form 2976 (see 123.61)
Priority Mail International parcels:
PS Form 2976-A inside 2976-E (envelope)

Global Express Guaranteed (210) Price Group 7

Refer to Notice 123, *Price List*, for the applicable retail, commercial base, or commercial plus price.
Weight Limit: 70 lbs.

Insurance (212.5)

Insured Amount not over	Fee	Insured Amount not over	Fee
$100	No Fee	For document reconstruction insurance or non-document insurance coverage above $800, add $1.00 per $100 or fraction thereof, up to a maximum of $2,499 per shipment.	
200	$1.00		
300	2.00		
400	3.00		
500	4.00		
600	5.00		
700	6.00		
800	7.00	$2,499 max.	$24.00

Value Limit (212.1)
The maximum value of a GXG shipment to this country is $2,499 or a lesser amount if limited by content or value.

Size Limits (211.22)
The surface area of the address side of the item to be mailed must be large enough to completely contain the Global Express Guaranteed Air Waybill/Shipping Invoice (shipping label), postage, endorsement, and any applicable markings. The shipping label is approximately 5.5 inches high and 9.5 inches long.
Maximum length: 46 inches
Maximum width: 35 inches
Maximum height: 46 inches
Maximum length and girth combined: 108 inches

General Conditions for Mailing
See Publication 141, *Global Express Guaranteed Service Guide,* for information about areas served in the destination country, allowable contents, packaging and labeling requirements, tracking and tracing, service standards, and other conditions for mailing.

Express Mail International (220) Price Group 9

Refer to Notice 123, *Price List*, for the applicable retail, commercial base, or commercial plus price.
Weight Limit: 55 lbs.

Express Mail International — Flat Rate Envelope and Flat Rate Boxes
The maximum weight for the Express Mail International Flat Rate Envelope and the Express Mail International Flat Rate Boxes is 20 pounds. Refer to Notice 123, *Price List*, for the applicable retail, commercial base, or commercial plus price.

Insurance (222.8)
Available for **Express Mail International merchandise shipments** only

Insured Amount not over	Fee	Insured Amount not over	Fee
$100	No Fee	For insurance coverage above $2,000, add $1.50 for each $500 or fraction thereof, up to a maximum of $5,000 per shipment.	
200	$0.85		
500	2.35		
1,000	3.85		
1,500	5.35		
2,000	6.85	$5,000 max.	$15.85

Articles Admitted	Required Customs Form/Endorsement
Business correspondence, commercial papers and documents.	PS Form 2976, Customs — CN 22 and Sender's Declaration. Next to mailing label, endorse item as BUSINESS PAPERS.
Merchandise samples without commercial value.	PS Form 2976, *Customs — CN 22 and Sender's Declaration.*
Merchandise and all articles subject to customs duty.	PS Form 2976-A, *Customs Declaration and Dispatch Note CP 72,* inside a PS Form 2976-E, *Customs Declaration Envelope CP 91.* An invoice must also be attached to the outside of all commercial shipments.

Size Limits (221.52)
Maximum length: 36 inches
Maximum length and girth combined: 79 inches

Notes:
1. Items are delivered Monday through Friday. There is no delivery on Saturdays, Sundays, or on national holidays.
2. All items that are admissible in international mail service to Anguilla, including correspondence, business papers, printed matter items, and merchandise, may also be enclosed in Express Mail International shipments. See Prohibitions and Restrictions under the Country Conditions for Mailing.
3. Coins; banknotes; currency notes, including paper money; securities of any kind payable to bearer; traveler's checks; platinum, gold, and silver; precious stones; jewelry; watches; and other valuable articles are prohibited in Express Mail International shipments that are mailed to Anguilla.

Reciprocal Service Name: EMS

Country Code: AI

Areas Served: All

Priority Mail International (230) Price Group 9

Refer to Notice 123, *Price List*, for the applicable retail, commercial base, or commercial plus price.
Weight Limit: 22 lbs.

Note: *Ordinary Priority Mail International includes indemnity at no cost based on weight. (See 230.)*

Priority Mail International — Flat Rate

Flat Rate Envelopes or Small Flat Rate Priced Boxes: The maximum weight is 4 pounds. Refer to Notice 123, *Price List*, for the applicable retail, commercial base, or commercial plus price.

Flat Rate Boxes — Medium and Large: The maximum weight is 20 pounds, or the limit set by the individual country, whichever is less. Refer to Notice 123, *Price List*, for the retail, commercial base, or commercial plus price.

Insurance (232.92)

Available for **Priority Mail International merchandise parcels** only (see 323.72 for markings)

Insured Amount not over	**Fee**
$50	$2.45
100	3.60
200	4.75
300	5.90
400	7.05
415 max.	8.20

Size Limits (231.22)

Maximum length: 42 inches
Maximum length and girth combined: 79 inches

First-Class Mail International (240) Price Group 9

For the prices and maximum weights for letters, large envelopes (flats), packages (small packets), and postcards, see Notice 123, *Price List*.

Size Limits

Letters: See 241.212
Postcards: See 241.221
Large Envelopes (Flats): See 241.232
Packages (Small Packets): See 241.242 and 241.243

Airmail M-bags (260) — Direct Sack to One Addressee Price Group 9

Refer to Notice 123, *Price List*, for the applicable retail, commercial base, or commercial plus price.
Weight Limit: 66 lbs.

Matter for the Blind (270)

Free when sent as First-Class Mail International, including Priority Mail International Flat Rate Envelopes and Small Flat Rate Priced Boxes. Weight limit: 4 pounds.
Free when sent as Priority Mail International. Weight limit: 15 pounds.

Extra Services

Certificate of Mailing (313)

Individual Pieces	**Fee**
Individual article (PS Form 3817)	$1.15
Firm mailing books (PS Form 3877), per article listed (minimum 3)	0.44
Duplicate copy of PS Form 3817 or PS Form 3877 (per page)	1.15
Bulk Quantities	**Fee**
First 1,000 pieces (or fraction thereof)	$6.70
Each additional 1,000 pieces (or fraction thereof)	0.80
Duplicate copy of PS Form 3606	1.15

COD and Certified

NOT for International Mail

International Business Reply Service (382)

Fee: Envelopes up to 2 ounces $1.50; Cards $1.00

International Postal Money Order (371)

Use MO Form MP1
Maximum Amount Available: $700 **Fee:** $4.45
Money Order Inquiry: **Fee:** $5.50

International Reply Coupons (381)

Fee: $2.20

Registered Mail (330)

Fee: $11.75

Maximum Indemnity: $47.33
Available for First-Class Mail International, including postcards and Flat Rate Envelopes and Small Flat Rate Priced Boxes, and matter for the blind or other physically handicapped persons. Not applicable to M-bags.

Restricted Delivery (350)

NOT Available

Return Receipt (340)

Fee: $2.35

Available for registered mail and insured Priority Mail International parcels only.

Antigua and Barbuda
(includes Redonda)

Country Conditions for Mailing

Prohibitions (130)
Coins except when sent in insured Priority Mail International parcels.

Restrictions
Fruits, nuts, dried, tinned, crystallized or otherwise preserved fruit must be accompanied by a certificate of origin issued by a competent authority and testifying that the articles originate from the U.S.A.

Observations
None

Customs Forms Required (123)
First-Class Mail International items and Priority Mail International Flat Rate Envelopes and Small Flat Rate Priced Boxes:
PS Form 2976 (see 123.61)
Priority Mail International parcels:
PS Form 2976-A inside 2976-E (envelope)

Global Express Guaranteed (210) Price Group 7

Refer to Notice 123, *Price List*, for the applicable retail, commercial base, or commercial plus price.
Weight Limit: 70 lbs.

Insurance (212.5)

Insured Amount not over	Fee	Insured Amount not over	Fee
$100	No Fee	For document reconstruction insurance or non-document insurance coverage above $800, add $1.00 per $100 or fraction thereof, up to a maximum of $2,499 per shipment.	
200	$1.00		
300	2.00		
400	3.00		
500	4.00		
600	5.00		
700	6.00		
800	7.00	$2,499 max.	$24.00

Value Limit (212.1)
The maximum value of a GXG shipment to this country is $2,499 or a lesser amount if limited by content or value.

Size Limits (211.22)
The surface area of the address side of the item to be mailed must be large enough to completely contain the Global Express Guaranteed Air Waybill/Shipping Invoice (shipping label), postage, endorsement, and any applicable markings. The shipping label is approximately 5.5 inches high and 9.5 inches long.
Maximum length: 46 inches
Maximum width: 35 inches
Maximum height: 46 inches
Maximum length and girth combined: 108 inches

General Conditions for Mailing
See Publication 141, *Global Express Guaranteed Service Guide,* for information about areas served in the destination country, allowable contents, packaging and labeling requirements, tracking and tracing, service standards, and other conditions for mailing.

Express Mail International (220)
Not Available

Priority Mail International (230) Price Group 9

Refer to Notice 123, *Price List*, for the applicable retail, commercial base, or commercial plus price.
Weight Limit: 22 lbs.

Note: *Ordinary Priority Mail International includes indemnity at no cost based on weight. (See 230.)*

Priority Mail International — Flat Rate
Flat Rate Envelopes or Small Flat Rate Priced Boxes: The maximum weight is 4 pounds. Refer to Notice 123, *Price List*, for the applicable retail, commercial base, or commercial plus price.

Flat Rate Boxes — Medium and Large: The maximum weight is 20 pounds, or the limit set by the individual country, whichever is less. Refer to Notice 123, *Price List*, for the retail, commercial base, or commercial plus price.

Insurance (232.92)
Available for **Priority Mail International merchandise parcels** only (see 323.72 for markings)

Insured Amount not over	Fee
$50	$2.45
60 max.	3.60

Size Limits (231.22)
Maximum length: 42 inches
Maximum length and girth combined: 79 inches

First-Class Mail International (240) Price Group 9
For the prices and maximum weights for letters, large envelopes (flats), packages (small packets), and postcards, see Notice 123, *Price List*.

Size Limits
Letters: See 241.212
Postcards: See 241.221
Large Envelopes (Flats): See 241.232
Packages (Small Packets): See 241.242 and 241.243

Airmail M-bags (260) — Direct Sack to One Addressee Price Group 9

Refer to Notice 123, *Price List*, for the applicable retail, commercial base, or commercial plus price.
Weight Limit: 66 lbs.

Matter for the Blind (270)
Free when sent as First-Class Mail International, including Priority Mail International Flat Rate Envelopes and Small Flat Rate Priced Boxes. Weight limit: 4 pounds.
Free when sent as Priority Mail International. Weight limit: 15 pounds.

Extra Services

Certificate of Mailing (313)

Individual Pieces	Fee
Individual article (PS Form 3817)	$1.15
Firm mailing books (PS Form 3877), per article listed (minimum 3)	0.44
Duplicate copy of PS Form 3817 or PS Form 3877 (per page)	1.15
Bulk Quantities	**Fee**
First 1,000 pieces (or fraction thereof)	$6.70
Each additional 1,000 pieces (or fraction thereof)	0.80
Duplicate copy of PS Form 3606	1.15

COD and Certified

NOT for International Mail

International Business Reply Service (382)

Fee: Envelopes up to 2 ounces $1.50; Cards $1.00

International Postal Money Order (371)

Use MO Form MP1

Maximum Amount Available: $700 **Fee:** $4.45

Money Order Inquiry: **Fee:** $5.50

International Reply Coupons (381)

Fee: $2.20

Registered Mail (330)

Fee: $11.75

Maximum Indemnity: $47.33

Available for First-Class Mail International, including postcards and Flat Rate Envelopes and Small Flat Rate Priced Boxes, and matter for the blind or other physically handicapped persons. Not applicable to M-bags.

Restricted Delivery (350)

NOT Available

Return Receipt (340)

Fee: $2.35

Available for registered mail and insured Priority Mail International parcels only.

Argentina

Country Conditions for Mailing

Prohibitions (130)

Coins; banknotes; currency notes; securities payable to bearer; traveler's checks; platinum, gold, and silver; precious stones; jewelry; and other valuable articles except in insured Priority Mail International.
Furs and skins of chinchillas and vicunas.
Radioactive materials.
Radio and television receivers, phonographs and combinations.
Ready-made clothes and fabrics unless they are typical family presents and have no commercial value.
Perishable infectious biological substances.

Restrictions

Bees, plants, seeds must be accompanied by a health certificate countersigned by the Argentine Consul.

Observations

1. Argentine customs legislation stipulates that in all cases the addressee must be present to authorize the opening, checking, and customs clearance of packages. To expedite the examination of such packages, the sender should write in a suitable place on the customs Declaration, the phrase "Peutetre Ouvert D' Office" (May Be Opened Officially), followed by his signature.
2. Each commercial shipment must be accompanied by a consular invoice in duplicate. These invoices must include a declaration signed by the seller or his representative reading: "I declare under oath that all the information given in this invoice is true and the prices indicated are those that actually have been paid (or will have to be paid). I also declare that no arrangements have been made that would make possible any alterations in these prices." The following articles do not require consular invoices:
   a. Books, reviews, newspapers, printed papers and scientific and literary periodicals, on condition that no import duty is payable.
   b. New or used effects or articles imported for noncommercial purposes or not of a saleable nature or value, intended for personal use or consumption and which, by reason of their quantity or type, give no grounds for thinking that they are intended for sale, and which do not exceed the value above which import duty would have to be paid.
   c. Goods in transit for other countries.
   d. Samples without saleable value (unused).
   e. Brochures, posters, printed papers, diaries, almanacs, negatives, photographs, films and other miscellaneous publicity articles advertising foreign goods or concerns, which are marked to prohibit their free sale.
   f. Spare parts and accessories for supplying or repairing foreign ships or aircraft in Argentina, if these are considered indispensable for continuing the journey.
   g. Customs, properties and other belongings of visiting theatrical companies.
   h. Goods returned to Argentina after definitive or temporary export unless a return invoice was explicitly requested when authorization for temporary export was granted.
   i. Educational equipment or materials intended for schools or scientific research institutes, whether as purchases, gifts, loans or technical or financial aid, on condition that the Argentine Ministry for Foreign Affairs and Religion gives permission beforehand.
3. Used linen and clothing must be accompanied by a certificate of disinfection issued by a competent authority in the country of origin and countersigned by an Argentine consular service. In areas without an Argentine consular service, a disinfection certificate issued by the competent authorities is sufficient. The wrapper must be marked "Disinfection Certificate Enclosed."

Customs Forms Required (123)

First-Class Mail International items and Priority Mail International Flat Rate Envelopes and Small Flat Rate Priced Boxes:
PS Form 2976 (see 123.61)
Priority Mail International parcels:
PS Form 2976-A inside 2976-E (envelope)

Global Express Guaranteed (210) Price Group 8

Refer to Notice 123, *Price List*, for the applicable retail, commercial base, or commercial plus price.
Weight Limit: 70 lbs.

Insurance (212.5)

Insured Amount not over	Fee	Insured Amount not over	Fee
$100	No Fee	For document reconstruction insurance or non-document insurance coverage above $800, add $1.00 per $100 or fraction thereof, up to a maximum of $1,000 per shipment.	
200	$1.00		
300	2.00		
400	3.00		
500	4.00		
600	5.00		
700	6.00		
800	7.00	$1,000 max.	$9.00

Value Limit (212.1)

The maximum value of a GXG shipment to Argentina is $1,000 or a lesser amount if limited by content or value.

Size Limits (211.22)

The surface area of the address side of the item to be mailed must be large enough to completely contain the Global Express Guaranteed Air Waybill/Shipping Invoice (shipping label), postage, endorsement, and any applicable markings. The shipping label is approximately 5.5 inches high and 9.5 inches long.
Maximum length: 46 inches
Maximum width: 35 inches
Maximum height: 46 inches
Maximum length and girth combined: 108 inches

General Conditions for Mailing

See Publication 141, *Global Express Guaranteed Service Guide,* for information about areas served in the destination country, allowable contents, packaging and labeling requirements, tracking and tracing, service standards, and other conditions for mailing.

Express Mail International (220) Price Group 9

Refer to Notice 123, *Price List*, for the applicable retail, commercial base, or commercial plus price.
Weight Limit: 44 lbs.

Express Mail International — Flat Rate Envelope and Flat Rate Boxes

The maximum weight for the Express Mail International Flat Rate Envelope and the Express Mail International Flat Rate Boxes is 20 pounds. Refer to Notice 123, *Price List*, for the applicable retail, commercial base, or commercial plus price.

Insurance (222.8)

Available for **Express Mail International merchandise shipments** only

Insured Amount not over	Fee	Insured Amount not over	Fee
$100	No Fee	For insurance coverage above $2,000, add $1.50 for each $500 or fraction thereof, up to a maximum of $5,000 per shipment.	
200	$0.85		
500	2.35		
1,000	3.85		
1,500	5.35		
2,000	6.85	$5,000 max.	$15.85

Articles Admitted	Required Customs Form/Endorsement
Business papers and documents.	No form required. Endorse item clearly next to mailing label as BUSINESS PAPERS.
Merchandise samples, microfilm, microfiche, magnetic disks and tapes for computers, brochures with technical information on merchandise, and industrial plans and drawings.	PS Form 2976, *Customs — CN 22 and Sender's Declaration.*
Merchandise and all articles subject to customs duty.	PS Form 2976-A, *Customs Declaration and Dispatch Note CP 72,* inside a PS Form 2976-E, *Customs Declaration Envelope CP 91.* Include a commercial invoice in each item.

Size Limits (221.52)

Maximum length: 36 inches
Maximum length and girth combined: 79 inches

Note:

Coins; banknotes; currency notes, including paper money; securities of any kind payable to bearer; traveler's checks; platinum, gold, and silver; precious stones; jewelry; watches; and other valuable articles are prohibited in Express Mail International shipments to Argentina.

Reciprocal Service Name: Door to Door

Country Code: AR

Areas Served: All

Priority Mail International (230) Price Group 9

Refer to Notice 123, *Price List*, for the applicable retail, commercial base, or commercial plus price.
Weight Limit: 44 lbs.

Note: *Ordinary Priority Mail International includes indemnity at no cost based on weight. (See 230.)*

Priority Mail International — Flat Rate

Flat Rate Envelopes or Small Flat Rate Priced Boxes: The maximum weight is 4 pounds. Refer to Notice 123, *Price List*, for the applicable retail, commercial base, or commercial plus price.

Flat Rate Boxes — Medium and Large: The maximum weight is 20 pounds, or the limit set by the individual country, whichever is less. Refer to Notice 123, *Price List*, for the retail, commercial base, or commercial plus price.

Insurance (232.92)

Available for **Priority Mail International merchandise parcels** only (see 323.72 for markings)

Insured Amount not over	Fee	Insured Amount not over	Fee
$50	$2.45	Add $1.15 for each additional $100 or fraction of insurance coverage.	
100	3.60		
200	4.75		
300	5.90		
400	7.05		
500	8.20	$5,000 max.	$59.95

Size Limits (231.22)

Maximum length: 42 inches
Maximum length and girth combined: 79 inches

First-Class Mail International (240) Price Group 9

For the prices and maximum weights for letters, large envelopes (flats), packages (small packets), and postcards, see Notice 123, *Price List*.

Size Limits

Letters: See 241.212
Postcards: See 241.221
Large Envelopes (Flats): See 241.232
Packages (Small Packets): See 241.242 and 241.243

Airmail M-bags (260) — Direct Sack to One Addressee Price Group 9

Refer to Notice 123, *Price List*, for the applicable retail, commercial base, or commercial plus price.
Weight Limit: 66 lbs.

Matter for the Blind (270)

Free when sent as First-Class Mail International, including Priority Mail International Flat Rate Envelopes and Small Flat Rate Priced Boxes. Weight limit: 4 pounds.
Free when sent as Priority Mail International. Weight limit: 15 pounds.

Extra Services

Certificate of Mailing (313)

Individual Pieces	Fee
Individual article (PS Form 3817)	$1.15
Firm mailing books (PS Form 3877), per article listed (minimum 3)	0.44
Duplicate copy of PS Form 3817 or PS Form 3877 (per page)	1.15
Bulk Quantities	**Fee**
First 1,000 pieces (or fraction thereof)	$6.70
Each additional 1,000 pieces (or fraction thereof)	0.80
Duplicate copy of PS Form 3606	1.15

COD and Certified

NOT for International Mail

International Business Reply Service (382)

Fee: Envelopes up to 2 ounces $1.50; Cards $1.00

International Postal Money Order (371)

NOT Available

International Reply Coupons (381)

Fee: $2.20

Registered Mail (330)

Fee: $11.75

Maximum Indemnity: $47.33
Available for First-Class Mail International, including postcards and Flat Rate Envelopes and Small Flat Rate Priced Boxes, and matter for the blind or other physically handicapped persons. Not applicable to M-bags.

Restricted Delivery (350)

NOT Available

Return Receipt (340)

Fee: $2.35

Available for registered mail and insured Priority Mail International parcels only.

Armenia

Country Conditions for Mailing

Prohibitions (130)

Explosive, combustible, or toxic materials.
Food that spoils easily.
Narcotics and other dangerous substances.
Perishable infectious biological substances.
Perishable noninfectious biological substances.
Photosensitive materials.
Postal items containing securities of any kind payable to the bearer; traveler's cheques; platinum, gold or silver, whether manufactured or not; precious stones; jewels; or other valuable articles.
Printed and typographic materials and reproductions of paintings harmful to the interest of the State and to the rights of its citizens; immoral articles.
Radioactive materials.
The dram (AMD) of the Republic of Armenia and foreign currencies.
Weapons of all kinds, military ammunition, combat material, and uniforms.

Restrictions

None furnished.

Observations

None

Customs Forms Required (123)

First-Class Mail International items and Priority Mail International Flat Rate Envelopes and Small Flat Rate Priced Boxes:
PS Form 2976 (see 123.61)
Priority Mail International parcels:
PS Form 2976-A inside 2976-E (envelope)

Global Express Guaranteed (210) Price Group 4

Refer to Notice 123, *Price List*, for the applicable retail, commercial base, or commercial plus price.
Weight Limit: 70 lbs.

Insurance (212.5)

Insured Amount not over	Fee	Insured Amount not over	Fee
$100	No Fee	For document reconstruction insurance or non-document insurance coverage above $800, add $1.00 per $100 or fraction thereof, up to a maximum of $2,499 per shipment.	
200	$1.00		
300	2.00		
400	3.00		
500	4.00		
600	5.00		
700	6.00		
800	7.00	$2,499 max.	$24.00

Value Limit (212.1)

The maximum value of a GXG shipment to this country is $2,499 or a lesser amount if limited by content or value.

Size Limits (211.22)

The surface area of the address side of the item to be mailed must be large enough to completely contain the Global Express Guaranteed Air Waybill/Shipping Invoice (shipping label), postage, endorsement, and any applicable markings. The shipping label is approximately 5.5 inches high and 9.5 inches long.
Maximum length: 46 inches
Maximum width: 35 inches
Maximum height: 46 inches
Maximum length and girth combined: 108 inches

General Conditions for Mailing

See Publication 141, *Global Express Guaranteed Service Guide,* for information about areas served in the destination country, allowable contents, packaging and labeling requirements, tracking and tracing, service standards, and other conditions for mailing.

Express Mail International (220) Price Group 4

Refer to Notice 123, *Price List*, for the applicable retail, commercial base, or commercial plus price.
Weight Limit: 44 lbs.

Express Mail International — Flat Rate Envelope and Flat Rate Boxes

The maximum weight for the Express Mail International Flat Rate Envelope and the Express Mail International Flat Rate Boxes is 20 pounds. Refer to Notice 123, *Price List*, for the applicable retail, commercial base, or commercial plus price.

Insurance (222.8)

Available for **Express Mail International merchandise shipments** only

Insured Amount not over	Fee	Insured Amount not over	Fee
$100	No Fee	For insurance coverage above $2,000, add $1.50 for each $500 or fraction thereof, up to a maximum of $5,000 per shipment.	
200	$0.85		
500	2.35		
1,000	3.85		
1,500	5.35		
2,000	6.85	$5,000 max.	$15.85

Articles Admitted	Required Customs Form/Endorsement
Correspondence, business papers, and documents.	PS Form 2976, *Customs — CN 22 and Sender's Declaration.* Endorse item clearly next to mailing label as BUSINESS PAPERS.
Merchandise samples without commercial value and not subject to customs duty.	PS Form 2976-A, *Customs Declaration and Dispatch Note CP 72,* inside a PS Form 2976-E, *Customs Declaration Envelope CP 91.*
Merchandise and all articles subject to customs duty.	PS Form 2976-A, *Customs Declaration and Dispatch Note CP 72,* inside a PS Form 2976-E, *Customs Declaration Envelope CP 91.*

Size Limits (221.52)

Maximum length: 36 inches
Maximum length and girth combined: 79 inches

Notes:

1. Addressees are required to obtain import licenses/permits to receive most goods.
2. Coins; banknotes; currency notes, including paper money; securities of any kind payable to bearer; traveler's checks; platinum, gold, and silver; precious stones; jewelry; watches; and other valuable articles are prohibited in Express Mail International shipments to Armenia.

Reciprocal Service Name: EMS

Country Code: AM

Areas Served:

Express Mail International is available ***only*** to the following location:
375000 Yerevan

Priority Mail International (230) Price Group 4

Refer to Notice 123, *Price List*, for the applicable retail, commercial base, or commercial plus price.
Weight Limit: 44 lbs.

Note: *Ordinary Priority Mail International includes indemnity at no cost based on weight. (See 230.)*

Priority Mail International — Flat Rate

Flat Rate Envelopes or Small Flat Rate Priced Boxes: The maximum weight is 4 pounds. Refer to Notice 123, *Price List*, for the applicable retail, commercial base, or commercial plus price.

Flat Rate Boxes — Medium and Large: The maximum weight is 20 pounds, or the limit set by the individual country, whichever is less. Refer to Notice 123, *Price List*, for the retail, commercial base, or commercial plus price.

Insurance (232.92)

Available for **Priority Mail International merchandise parcels** only (see 323.72 for markings)

Insured Amount not over	Fee	Insured Amount not over	Fee
$50	$2.45		
100	3.60	Add $1.15 for each additional $100 or fraction of insurance coverage.	
200	4.75		
300	5.90		
400	7.05		
500	8.20	$875 max.	$12.80

Size Limits (231.22)

Maximum length: 42 inches
Maximum length and girth combined: 79 inches

First-Class Mail International (240) Price Group 4

For the prices and maximum weights for letters, large envelopes (flats), packages (small packets), and postcards, see Notice 123, *Price List*.

Size Limits

Letters: See 241.212
Postcards: See 241.221
Large Envelopes (Flats): See 241.232
Packages (Small Packets): See 241.242 and 241.243

Airmail M-bags (260) — Direct Sack to One Addressee Price Group 4

Refer to Notice 123, *Price List*, for the applicable retail, commercial base, or commercial plus price.
Weight Limit: 66 lbs.

Matter for the Blind (270)

Free when sent as First-Class Mail International, including Priority Mail International Flat Rate Envelopes and Small Flat Rate Priced Boxes. Weight limit: 4 pounds.
Free when sent as Priority Mail International. Weight limit: 15 pounds.

Extra Services

Certificate of Mailing (313)

Individual Pieces	Fee
Individual article (PS Form 3817)	$1.15
Firm mailing books (PS Form 3877), per article listed (minimum 3)	0.44
Duplicate copy of PS Form 3817 or PS Form 3877 (per page)	1.15
Bulk Quantities	**Fee**
First 1,000 pieces (or fraction thereof)	$6.70
Each additional 1,000 pieces (or fraction thereof)	0.80
Duplicate copy of PS Form 3606	1.15

COD and Certified **NOT** for International Mail

International Business Reply Service (382)

Fee: Envelopes up to 2 ounces $1.50; Cards $1.00

International Postal Money Order (371)

NOT Available

International Reply Coupons (381) **Fee:** $2.20

Registered Mail (330) **Fee:** $11.75

Maximum Indemnity: $47.33
Available for First-Class Mail International, including postcards and Flat Rate Envelopes and Small Flat Rate Priced Boxes, and matter for the blind or other physically handicapped persons. Not applicable to M-bags.

Restricted Delivery (350) **Fee:** $4.55

Available for registered mail with a return receipt.
Endorsements: A remettre en main propre.

Return Receipt (340) **Fee:** $2.35

Available for registered mail and insured Priority Mail International parcels only.

Aruba

Country Conditions for Mailing

Prohibitions (130)

Coins; banknotes; currency; securities of any kind payable to bearer; traveler's checks; platinum, gold, and silver (manufactured or not); precious stones; jewelry; and other valuable articles, **unless they are sent in registered First-Class Mail International.**
Copper, bronze, or nickel coins.
Perishable infectious biological substances.
Perishable noninfectious biological substances.
Radioactive materials.

Restrictions

Importation of arms requires special permission.

Observations

None

Customs Forms Required (123)

First-Class Mail International items and Priority Mail International Flat Rate Envelopes and Small Flat Rate Priced Boxes:
PS Form 2976 (see 123.61)
Priority Mail International parcels:
PS Form 2976-A inside 2976-E (envelope)

Global Express Guaranteed (210) Price Group 7

Refer to Notice 123, *Price List*, for the applicable retail, commercial base, or commercial plus price.
Weight Limit: 70 lbs.

Insurance (212.5)

Insured Amount not over	Fee	Insured Amount not over	Fee
$100	No Fee	For document reconstruction insurance or non-document insurance coverage above $800, add $1.00 per $100 or fraction thereof, up to a maximum of $2,499 per shipment.	
200	$1.00		
300	2.00		
400	3.00		
500	4.00		
600	5.00		
700	6.00		
800	7.00	$2,499 max.	$24.00

Value Limit (212.1)

The maximum value of a GXG shipment to this country is $2,499 or a lesser amount if limited by content or value.

Size Limits (211.22)

The surface area of the address side of the item to be mailed must be large enough to completely contain the Global Express Guaranteed Air Waybill/Shipping Invoice (shipping label), postage, endorsement, and any applicable markings. The shipping label is approximately 5.5 inches high and 9.5 inches long.
Maximum length: 46 inches
Maximum width: 35 inches
Maximum height: 46 inches
Maximum length and girth combined: 108 inches

General Conditions for Mailing

See Publication 141, *Global Express Guaranteed Service Guide,* for information about areas served in the destination country, allowable contents, packaging and labeling requirements, tracking and tracing, service standards, and other conditions for mailing.

Express Mail International (220) Price Group 9

Refer to Notice 123, *Price List*, for the applicable retail, commercial base, or commercial plus price.
Weight Limit: 44 lbs.

Express Mail International — Flat Rate Envelope and Flat Rate Boxes

The maximum weight for the Express Mail International Flat Rate Envelope and the Express Mail International Flat Rate Boxes is 20 pounds. Refer to Notice 123, *Price List*, for the applicable retail, commercial base, or commercial plus price.

Insurance (222.8)

Available for **Express Mail International merchandise shipments** only

Insured Amount not over	Fee	Insured Amount not over	Fee
$100	No Fee	For insurance coverage above $2,000, add $1.50 for each $500 or fraction thereof, up to a maximum of $5,000 per shipment.	
200	$0.85		
500	2.35		
1,000	3.85		
1,500	5.35		
2,000	6.85	$5,000 max.	$15.85

Articles Admitted	Required Customs Form/Endorsement
Correspondence and business papers.	PS Form 2976, *Customs — CN 22 and Sender's Declaration.* Endorse item clearly next to mailing label as DOCUMENTS WITHOUT COMMERCIAL VALUE.
Merchandise samples without commercial value and not subject to customs duty.	PS Form 2976, *Customs — CN 22 and Sender's Declaration.*
Merchandise and all articles subject to customs duty.	PS Form 2976-A, *Customs Declaration and Dispatch Note CP 72,* inside a PS Form 2976-E, *Customs Declaration Envelope CP 91.* Include a commercial invoice in each item.

Size Limits (221.52)

Maximum length: 36 inches
Maximum length and girth combined: 79 inches

Note:

Coins; banknotes; currency notes, including paper money; securities of any kind payable to bearer; traveler's checks; platinum, gold, and silver; precious stones; jewelry; watches; and other valuable articles are prohibited in Express Mail International shipments to Aruba.

Reciprocal Service Name: EMS

Country Code: AW

Areas Served: All

Priority Mail International (230) Price Group 9

Refer to Notice 123, *Price List*, for the applicable retail, commercial base, or commercial plus price.
Weight Limit: 44 lbs.

Note: *Ordinary Priority Mail International includes indemnity at no cost based on weight. (See 230.)*

Priority Mail International — Flat Rate

Flat Rate Envelopes or Small Flat Rate Priced Boxes: The maximum weight is 4 pounds. Refer to Notice 123, *Price List*, for the applicable retail, commercial base, or commercial plus price.

Flat Rate Boxes — Medium and Large: The maximum weight is 20 pounds, or the limit set by the individual country, whichever is less. Refer to Notice 123, *Price List*, for the retail, commercial base, or commercial plus price.

Insurance (232.92)

Available for **Priority Mail International merchandise parcels** only (see 323.72 for markings)

Insured Amount not over	**Fee**	**Insured Amount** not over	**Fee**
$50	$2.45	Add $1.15 for each additional $100 or fraction of insurance coverage.	
100	3.60		
200	4.75		
300	5.90		
400	7.05		
500	8.20	$830 max.	$12.80

Size Limits (231.22)

Maximum length: 42 inches
Maximum length and girth combined: 79 inches

First-Class Mail International (240) Price Group 9

For the prices and maximum weights for letters, large envelopes (flats), packages (small packets), and postcards, see Notice 123, *Price List*.

Size Limits

Letters: See 241.212
Postcards: See 241.221
Large Envelopes (Flats): See 241.232
Packages (Small Packets): See 241.242 and 241.243

Airmail M-bags (260) — Direct Sack to One Addressee Price Group 9

Refer to Notice 123, *Price List*, for the applicable retail, commercial base, or commercial plus price.
Weight Limit: 66 lbs.

Matter for the Blind (270)

Free when sent as First-Class Mail International, including Priority Mail International Flat Rate Envelopes and Small Flat Rate Priced Boxes. Weight limit: 4 pounds.
Free when sent as Priority Mail International. Weight limit: 15 pounds.

Extra Services

Certificate of Mailing (313)

Individual Pieces	**Fee**
Individual article (PS Form 3817)	$1.15
Firm mailing books (PS Form 3877), per article listed (minimum 3)	0.44
Duplicate copy of PS Form 3817 or PS Form 3877 (per page)	1.15
Bulk Quantities	**Fee**
First 1,000 pieces (or fraction thereof)	$6.70
Each additional 1,000 pieces (or fraction thereof)	0.80
Duplicate copy of PS Form 3606	1.15

COD and Certified

NOT for International Mail

International Business Reply Service (382)

Fee: Envelopes up to 2 ounces $1.50; Cards $1.00

International Postal Money Order (371)

NOT Available

International Reply Coupons (381)

Fee: $2.20

Registered Mail (330)

Fee: $11.75

Maximum Indemnity: $47.33
Available for First-Class Mail International, including postcards and Flat Rate Envelopes and Small Flat Rate Priced Boxes, and matter for the blind or other physically handicapped persons. Not applicable to M-bags.

Restricted Delivery (350)

NOT Available

Return Receipt (340)

Fee: $2.35

Available for registered mail and insured Priority Mail International parcels only.

Ascension

Country Conditions for Mailing

Prohibitions (130)
No list furnished.

Restrictions
No list furnished.

Observations
None

Customs Forms Required (123)
First-Class Mail International items and Priority Mail International Flat Rate Envelopes and Small Flat Rate Priced Boxes:
PS Form 2976 (see 123.61)

Global Express Guaranteed (210)
Not Available

Express Mail International (220)
Not Available

Priority Mail International (230) **Price Group 7**
Available only for Priority Mail International Flat Rate Envelope and Small Flat Rate Priced Boxes.

Flat Rate Envelopes or Small Flat Rate Priced Boxes: The maximum weight is 4 pounds. Refer to Notice 123, *Price List*, for the applicable retail, commercial base, or commercial plus price.

Insurance (232.92) NOT Available

First-Class Mail International (240) **Price Group 7**
For the prices and maximum weights for letters, large envelopes (flats), packages (small packets), and postcards, see Notice 123, *Price List*.

Size Limits
Letters: See 241.212
Postcards: See 241.221
Large Envelopes (Flats): See 241.232
Packages (Small Packets): See 241.242 and 241.243

Airmail M-bags (260) — Direct Sack to One Addressee **Price Group 7**

Refer to Notice 123, *Price List*, for the applicable retail, commercial base, or commercial plus price.
Weight Limit: 66 lbs.

Matter for the Blind (270)
Free when sent as First-Class Mail International, including Priority Mail International Flat Rate Envelopes and Small Flat Rate Priced Boxes. Weight limit: 4 pounds.
Free when sent as Priority Mail International. Weight limit: 15 pounds.

Extra Services

Certificate of Mailing (313)

Individual Pieces	**Fee**
Individual article (PS Form 3817)	$1.15
Firm mailing books (PS Form 3877), per article listed (minimum 3)	0.44
Duplicate copy of PS Form 3817 or PS Form 3877 (per page)	1.15
Bulk Quantities	**Fee**
First 1,000 pieces (or fraction thereof)	$6.70
Each additional 1,000 pieces (or fraction thereof)	0.80
Duplicate copy of PS Form 3606	1.15

COD and Certified **NOT** for International Mail

International Business Reply Service (382)
Fee: Envelopes up to 2 ounces $1.50; Cards $1.00

International Postal Money Order (371)
NOT Available

International Reply Coupons (381) **Fee:** $2.20

Registered Mail (330) **Fee:** $11.75
Maximum Indemnity: $47.33
Available for First-Class Mail International, including postcards and Flat Rate Envelopes and Small Flat Rate Priced Boxes, and matter for the blind or other physically handicapped persons. Not applicable to M-bags.

Restricted Delivery (350) NOT Available

Return Receipt (340) **Fee:** $2.35
Available for registered mail only.

Australia

Country Conditions for Mailing

Prohibitions (130)

Coins; bank notes; currency notes (paper money); securities of any kind payable to bearer; traveler's checks; platinum, gold, and silver (except for jewelry items meeting the requirement in "Restrictions" below); precious stones (except when contained in jewelry items meeting the requirement in "Restrictions" below); and other valuable articles are prohibited.
Fruit cartons (used or new).
Goods bearing the name "Anzac."
Goods produced wholly or partly in prisons or by convict labor.
Perishable infectious biological substances.
Radioactive materials.
Registered philatelic articles with fictitious addresses.
Seditious literature.
Silencers for firearms.
Used bedding.

Restrictions

Jewelry is permitted only when sent as an insured parcel using Priority Mail International service. In addition, Australian Customs regulations prohibit importation of jewelry that is made with ivory or from endangered species, such as snake, elephant, or crocodile, that does not have an accompanying Import/Export Permit in relation to the Convention on International Trade in Endangered Species of Wild Fauna and Flora (CITES).
Meat and other animal products; powdered or concentrated milk; and other dairy products requires permission to import from the Australian quarantine authorities.
Permission of the Australian Director-General of Health is required to import medicines.

Observations

Duty may be levied on catalogs, price lists, circulars, and all advertising introduced into Australia through the mail, regardless of the class of mail used.

Customs Forms Required (123)

First-Class Mail International items and Priority Mail International Flat Rate Envelopes and Small Flat Rate Priced Boxes:
PS Form 2976 (see 123.61)
Priority Mail International parcels:
PS Form 2976-A inside 2976-E (envelope)

Global Express Guaranteed (210) Price Group 6

Refer to Notice 123, *Price List*, for the applicable retail, commercial base, or commercial plus price.
Weight Limit: 70 lbs.

Insurance (212.5)

Insured Amount not over	Fee	Insured Amount not over	Fee
$100	No Fee	For document reconstruction insurance or non-document insurance coverage above $800, add $1.00 per $100 or fraction thereof, up to a maximum of $2,499 per shipment.	
200	$1.00		
300	2.00		
400	3.00		
500	4.00		
600	5.00		
700	6.00		
800	7.00	$2,499 max.	$24.00

Value Limit (212.1)

The maximum value of a GXG shipment to this country is $2,499 or a lesser amount if limited by content or value.

Size Limits (211.22)

The surface area of the address side of the item to be mailed must be large enough to completely contain the Global Express Guaranteed Air Waybill/Shipping Invoice (shipping label), postage, endorsement, and any applicable markings. The shipping label is approximately 5.5 inches high and 9.5 inches long.
Maximum length: 46 inches
Maximum width: 35 inches
Maximum height: 46 inches
Maximum length and girth combined: 108 inches

General Conditions for Mailing

See Publication 141, *Global Express Guaranteed Service Guide,* for information about areas served in the destination country, allowable contents, packaging and labeling requirements, tracking and tracing, service standards, and other conditions for mailing.

Express Mail International (220) Price Group 10

Refer to Notice 123, *Price List*, for the applicable retail, commercial base, or commercial plus price.
Weight Limit: 44 lbs.

Express Mail International — Flat Rate Envelope and Flat Rate Boxes

The maximum weight for the Express Mail International Flat Rate Envelope and the Express Mail International Flat Rate Boxes is 20 pounds. Refer to Notice 123, *Price List*, for the applicable retail, commercial base, or commercial plus price.

Insurance (222.8)

Available for **Express Mail International merchandise shipments** only

Insured Amount not over	Fee	Insured Amount not over	Fee
$100	No Fee	For insurance coverage above $2,000, add $1.50 for each $500 or fraction thereof, up to a maximum of $5,000 per shipment.	
200	$0.85		
500	2.35		
1,000	3.85		
1,500	5.35		
2,000	6.85	$5,000 max.	$15.85

Articles Admitted	Required Customs Form/Endorsement
Business and commercial papers.	No form required. Endorse item clearly next to mailing label as BUSINESS PAPERS.
Merchandise samples without commercial value microfilm, microfiche, and computer data.	PS Form 2976-A, *Customs Declaration and Dispatch Note CP 72,* inside a PS Form 2976-E, *Customs Declaration Envelope CP 91.*
Merchandise and all articles subject to customs duty.	PS Form 2976-A, *Customs Declaration and Dispatch Note CP 72,* inside a PS Form 2976-E, *Customs Declaration Envelope CP 91.*

Size Limits (221.52)

Maximum length: 36 inches
Maximum length and girth combined: 79 inches

Notes:

1. Coins; banknotes; currency notes, including paper money; securities of any kind payable to bearer; traveler's checks; platinum, gold, and silver; precious stones; jewelry; watches; and other valuable articles are prohibited in Express Mail International shipments to Australia.
2. Express Mail International With Guarantee service — which offers a date-certain, postage-refund guarantee — is available to Australia.

Reciprocal Service Name: Express Post

Country Code: AU

Areas Served:

All except Lord Howe Island and the Australian Antarctic territories.

Priority Mail International (230) Price Group 10

Refer to Notice 123, *Price List*, for the applicable retail, commercial base, or commercial plus price.
Weight Limit: 66 lbs.

Note: *Ordinary Priority Mail International includes indemnity at no cost based on weight. (See 230.)*

Priority Mail International — Flat Rate

Flat Rate Envelopes or Small Flat Rate Priced Boxes: The maximum weight is 4 pounds. Refer to Notice 123, *Price List*, for the applicable retail, commercial base, or commercial plus price.

Flat Rate Boxes — Medium and Large: The maximum weight is 20 pounds, or the limit set by the individual country, whichever is less. Refer to Notice 123, *Price List*, for the retail, commercial base, or commercial plus price.

Insurance (232.92)

Available for **Priority Mail International merchandise parcels** only (see 323.72 for markings)

Insured Amount not over	Fee	Insured Amount not over	Fee
$50	$2.45		
100	3.60	Add $1.15 for each additional $100 or fraction of insurance coverage.	
200	4.75		
300	5.90		
400	7.05		
500	8.20	$3,644 max.	$45.00

Size Limits (231.22)

Maximum length: 42 inches
Maximum length and girth combined: 79 inches

First-Class Mail International (240) Price Group 3

For the prices and maximum weights for letters, large envelopes (flats), packages (small packets), and postcards, see Notice 123, *Price List*.

Size Limits

Letters: See 241.212
Postcards: See 241.221
Large Envelopes (Flats): See 241.232
Packages (Small Packets): See 241.242 and 241.243

Airmail M-bags (260) — Direct Sack to One Addressee Price Group 3

Refer to Notice 123, *Price List*, for the applicable retail, commercial base, or commercial plus price.
Weight Limit: 66 lbs.

Matter for the Blind (270)

Free when sent as First-Class Mail International, including Priority Mail International Flat Rate Envelopes and Small Flat Rate Priced Boxes. Weight limit: 4 pounds.
Free when sent as Priority Mail International. Weight limit: 15 pounds.

Extra Services

Certificate of Mailing (313)

Individual Pieces	Fee
Individual article (PS Form 3817)	$1.15
Firm mailing books (PS Form 3877), per article listed (minimum 3)	0.44
Duplicate copy of PS Form 3817 or PS Form 3877 (per page)	1.15
Bulk Quantities	**Fee**
First 1,000 pieces (or fraction thereof)	$6.70
Each additional 1,000 pieces (or fraction thereof)	0.80
Duplicate copy of PS Form 3606	1.15

COD and Certified **NOT** for International Mail

International Business Reply Service (382)

Fee: Envelopes up to 2 ounces $1.50; Cards $1.00

International Postal Money Order (371)

NOT Available

International Reply Coupons (381) **Fee:** $2.20

Registered Mail (330) **Fee:** $11.75

Maximum Indemnity: $47.33
Available for First-Class Mail International, including postcards and Flat Rate Envelopes and Small Flat Rate Priced Boxes, and matter for the blind or other physically handicapped persons. Not applicable to M-bags.

Restricted Delivery (350) **Fee:** $4.55

Available for registered mail with a return receipt.
Endorsements: A remettre en main propre.

Return Receipt (340) **Fee:** $2.35

Available for registered mail and insured Priority Mail International parcels only.

Austria

Country Conditions for Mailing

Prohibitions (130)

Arms and weapons.
Certain books and printed matter which are prohibited by order of the courts in Austria.
Firearms, parts and accessories thereof, or replica firearms.
Foreign lottery tickets and publicity material relating thereto.
Human remains.
Live bees, leeches, silkworms, and flies of the family Drosophilidae.
Live plants and animals.

Restrictions

Articles made of precious metals (gold, silver or platinum) must be of the fineness required by the Austrian regulations.
Austrian coins, gold coins require permission of the Austrian National Bank.
Meat and animal products; plants and parts of plants; fruit, onion and flower bulbs; and other root plants must be accompanied by a certificate of origin and plant-health certificate. Shipments containing processed meat products (salami, tinned meats, etc.) up to a weight of 3 kg. (6 lbs., 9 oz.) when sent to private persons are exempt from this requirement.
Medicines intended for personal use are permitted only under an import license.

Observations

1. A parcel may be addressed to a street address or to a post office box. A local telephone number for the addressee should be provided when the item is addressed to a street address and must be provided when the item is addressed to a post office box.
2. For Priority Mail International parcels, an invoice, in duplicate, is required for all commercial shipments regardless of value and all personal shipments valued at $300 or more. The invoices must be affixed to the outside of the parcel or may be enclosed in PS Form 2976-E with the customs declaration.
3. Gifts shipments are exempt from charges and fees provided the value of the shipment does not exceed 29 euros; they may not contain more than 40 cigarettes or 10 cigars or 50 grams of tobacco, or more than 50 grams of a selection of these products. Gift shipments should be clearly marked **GESCHENKSENDUNG** on the customs declaration.

Customs Forms Required (123)

First-Class Mail International items and Priority Mail International Flat Rate Envelopes and Small Flat Rate Priced Boxes:
PS Form 2976 (see 123.61)
Priority Mail International parcels:
PS Form 2976-A inside 2976-E (envelope)

Global Express Guaranteed (210) Price Group 5

Refer to Notice 123, *Price List*, for the applicable retail, commercial base, or commercial plus price.
Weight Limit: 70 lbs.

Insurance (212.5)

Insured Amount not over	Fee	Insured Amount not over	Fee
$100	No Fee	For document reconstruction insurance or non-document insurance coverage above $800, add $1.00 per $100 or fraction thereof, up to a maximum of $2,499 per shipment.	
200	$1.00		
300	2.00		
400	3.00		
500	4.00		
600	5.00		
700	6.00		
800	7.00	$2,499 max.	$24.00

Value Limit (212.1)

The maximum value of a GXG shipment to this country is $2,499 or a lesser amount if limited by content or value.

Size Limits (211.22)

The surface area of the address side of the item to be mailed must be large enough to completely contain the Global Express Guaranteed Air Waybill/Shipping Invoice (shipping label), postage, endorsement, and any applicable markings. The shipping label is approximately 5.5 inches high and 9.5 inches long.
Maximum length: 46 inches
Maximum width: 35 inches
Maximum height: 46 inches
Maximum length and girth combined: 108 inches

General Conditions for Mailing

See Publication 141, *Global Express Guaranteed Service Guide,* for information about areas served in the destination country, allowable contents, packaging and labeling requirements, tracking and tracing, service standards, and other conditions for mailing.

Express Mail International (220) Price Group 5

Refer to Notice 123, *Price List*, for the applicable retail, commercial base, or commercial plus price.
Weight Limit: 66 lbs.

Express Mail International — Flat Rate Envelope and Flat Rate Boxes

The maximum weight for the Express Mail International Flat Rate Envelope and the Express Mail International Flat Rate Boxes is 20 pounds. Refer to Notice 123, *Price List*, for the applicable retail, commercial base, or commercial plus price.

Insurance (222.8)

Available for **Express Mail International merchandise shipments** only

Insured Amount not over	Fee	Insured Amount not over	Fee
$100	No Fee	For insurance coverage above $2,000, add $1.50 for each $500 or fraction thereof, up to a maximum of $5,000 per shipment.	
200	$0.85		
500	2.35		
1,000	3.85		
1,500	5.35		
2,000	6.85	$5,000 max.	$15.85

Articles Admitted	Required Customs Form/Endorsement
Correspondence and business papers.	PS Form 2976, *Customs — CN 22 and Sender's Declaration.*
Merchandise samples without commercial value and not subject to customs duty.	PS Form 2976-A, *Customs Declaration and Dispatch Note CP 72,* inside a PS Form 2976-E, *Customs Declaration Envelope CP 91.*
Merchandise and all articles subject to customs duty.	PS Form 2976-A, *Customs Declaration and Dispatch Note CP 72,* inside a PS Form 2976-E, *Customs Declaration Envelope CP 91.* An invoice, in duplicate, is required for all commercial shipments regardless of value and all personal shipments valued at $300 or more. The invoices must be either affixed to the outside of the parcel or enclosed in PS Form 2976-E with the customs declaration.

Size Limits (221.52)
Maximum length: 60 inches
Maximum length and girth combined: 108 inches

Notes:
1. An invoice, in duplicate, is required for all commercial shipments regardless of value and for all personal shipments valued at $300 or more. The invoices must be either affixed to the outside of the parcel or enclosed in PS Form 2976-E with the customs declaration.
2. Arms, weapons, and human remains are prohibited.
3. Coins; banknotes; currency notes, including paper money; securities of any kind payable to bearer; traveler's checks; platinum, gold, and silver; precious stones; jewelry; watches; and other valuable articles are prohibited in Express Mail International shipments to Austria.
4. An Express Mail International shipment may be addressed to a street address or to a post office box. A local telephone number for the addressee should be provided when the item is addressed to a street address and must be provided when the item is addressed to a post office box.

Reciprocal Service Name: There is no reciprocal service.

Country Code: AT

Areas Served: All

Priority Mail International (230) Price Group 5

Refer to Notice 123, *Price List*, for the applicable retail, commercial base, or commercial plus price.
Weight Limit: 66 lbs.

Note: *Ordinary Priority Mail International includes indemnity at no cost based on weight. (See 230.)*

Priority Mail International — Flat Rate
Flat Rate Envelopes or Small Flat Rate Priced Boxes: The maximum weight is 4 pounds. Refer to Notice 123, *Price List*, for the applicable retail, commercial base, or commercial plus price.

Flat Rate Boxes — Medium and Large: The maximum weight is 20 pounds, or the limit set by the individual country, whichever is less. Refer to Notice 123, *Price List*, for the retail, commercial base, or commercial plus price.

Insurance (232.92)
Available for **Priority Mail International merchandise parcels** only (see 323.72 for markings)

Insured Amount not over	Fee	Insured Amount not over	Fee
$50	$2.45		
100	3.60	Add $1.15 for each additional $100 or fraction of insurance coverage.	
200	4.75		
300	5.90		
400	7.05		
500	8.20	$5,000 max.	$59.95

Size Limits (231.22)
Maximum length: 60 inches
Maximum length and girth combined: 108 inches

First-Class Mail International (240) Price Group 5
For the prices and maximum weights for letters, large envelopes (flats), packages (small packets), and postcards, see Notice 123, *Price List*.

Size Limits
Letters: See 241.212
Postcards: See 241.221
Large Envelopes (Flats): See 241.232
Packages (Small Packets): See 241.242 and 241.243

Airmail M-bags (260) — Direct Sack to One Addressee Price Group 5

Refer to Notice 123, *Price List*, for the applicable retail, commercial base, or commercial plus price.
Weight Limit: 66 lbs.

Matter for the Blind (270)
Free when sent as First-Class Mail International, including Priority Mail International Flat Rate Envelopes and Small Flat Rate Priced Boxes. Weight limit: 4 pounds.
Free when sent as Priority Mail International. Weight limit: 15 pounds.

Extra Services

Certificate of Mailing (313)

Individual Pieces	Fee
Individual article (PS Form 3817)	$1.15
Firm mailing books (PS Form 3877), per article listed (minimum 3)	0.44
Duplicate copy of PS Form 3817 or PS Form 3877 (per page)	1.15
Bulk Quantities	**Fee**
First 1,000 pieces (or fraction thereof)	$6.70
Each additional 1,000 pieces (or fraction thereof)	0.80
Duplicate copy of PS Form 3606	1.15

COD and Certified

NOT for International Mail

International Business Reply Service (382)

Fee: Envelopes up to 2 ounces $1.50; Cards $1.00

International Postal Money Order (371)

NOT Available

International Reply Coupons (381)

Fee: $2.20

Registered Mail (330)

Fee: $11.75

Maximum Indemnity: $47.33
Available for First-Class Mail International, including postcards and Flat Rate Envelopes and Small Flat Rate Priced Boxes, and matter for the blind or other physically handicapped persons. Not applicable to M-bags.

Restricted Delivery (350)

Fee: $4.55

Available for registered mail with a return receipt.
Endorsements: A remettre en main propre.

Return Receipt (340)

Fee: $2.35

Available for registered mail and insured Priority Mail International parcels only.

Azerbaijan

Country Conditions for Mailing

Prohibitions (130)

Articles for smoking opium and hashish.
Explosives.
Films containing technology on the manufacture of narcotics, psychotropic or toxic substances, explosives, or arms or ammunitions.
Films promoting immorality, violence, or terror.
Firearms, ammunition, cutting and stabbing arms, and other articles designed for attack or defense (knuckledusters, stiletto blades, balls of paralyzing fluid, etc.), explosives, war materiel.
Narcotics and psychotropic substances; articles for their use.
Printed matter (books, newspapers, pictures and other products of the printing industry; manuscripts, typescripts, and plans) promoting immorality, violence, or terror.
Radioactive materials.
Rare plants listed in the Red Book of the Republic of Azerbaijan, antlers, and horns of the species Cervidae.

Restrictions

Articles subject to customs duty may not be sent in ordinary or registered First-Class Mail International items, including the Priority Mail International Flat Rate Envelope and Small Flat Rate Priced Boxes.
Biological and veterinary products used in veterinary medicine and raw materials of animal or plant origin can be imported with authorization from the competent veterinary bodies and State bodies in charge of plant quarantine.
Hunting weapons and ammunition for them require prior authority of the Ministry of the Internal Affairs of Azerbaijan.
Medicaments and vitamin preparations require authorization from the Ministry of Health of Republic of Azerbaijan.
Radio-electronic media and high-frequency apparatus require prior authority by the Ministry of Posts and Telecommunications of the Republic of Azerbaijan.
Seeds, plants, root tubers, bulk and other plant parts, fruits, legumes, and fresh vegetables must have prior authorization by the relevant State body in charge of plant quarantine in Azerbaijan.

Observations

None

Customs Forms Required (123)

First-Class Mail International items and Priority Mail International Flat Rate Envelopes and Small Flat Rate Priced Boxes:
PS Form 2976 (see 123.61)
Priority Mail International parcels:
PS Form 2976-A inside 2976-E (envelope)

Global Express Guaranteed (210) Price Group 4

Refer to Notice 123, *Price List*, for the applicable retail, commercial base, or commercial plus price.
Weight Limit: 70 lbs.

Insurance (212.5)

Insured Amount not over	Fee	Insured Amount not over	Fee
$100	No Fee	For document reconstruction insurance or non-document insurance coverage above $800, add $1.00 per $100 or fraction thereof, up to a maximum of $2,499 per shipment.	
200	$1.00		
300	2.00		
400	3.00		
500	4.00		
600	5.00		
700	6.00		
800	7.00	$2,499 max.	$24.00

Value Limit (212.1)

The maximum value of a GXG shipment to this country is $2,499 or a lesser amount if limited by content or value.

Size Limits (211.22)

The surface area of the address side of the item to be mailed must be large enough to completely contain the Global Express Guaranteed Air Waybill/Shipping Invoice (shipping label), postage, endorsement, and any applicable markings. The shipping label is approximately 5.5 inches high and 9.5 inches long.
Maximum length: 46 inches
Maximum width: 35 inches
Maximum height: 46 inches
Maximum length and girth combined: 108 inches

General Conditions for Mailing

See Publication 141, *Global Express Guaranteed Service Guide,* for information about areas served in the destination country, allowable contents, packaging and labeling requirements, tracking and tracing, service standards, and other conditions for mailing.

Express Mail International (220) Price Group 4

Refer to Notice 123, *Price List*, for the applicable retail, commercial base, or commercial plus price.
Weight Limit: 70 lbs.

Express Mail International — Flat Rate Envelope and Flat Rate Boxes

The maximum weight for the Express Mail International Flat Rate Envelope and the Express Mail International Flat Rate Boxes is 20 pounds. Refer to Notice 123, *Price List*, for the applicable retail, commercial base, or commercial plus price.

Insurance (222.8)

Available for **Express Mail International merchandise shipments** only

Insured Amount not over	Fee	Insured Amount not over	Fee
$100	No Fee	For insurance coverage above $2,000, add $1.50 for each $500 or fraction thereof, up to a maximum of $5,000 per shipment.	
200	$0.85		
500	2.35		
1,000	3.85		
1,500	5.35		
2,000	6.85	$5,000 max.	$15.85

Articles Admitted	Required Customs Form/Endorsement
Correspondence, business papers, and documents.	PS Form 2976, *Customs — CN 22 and Sender's Declaration.* Endorse item clearly next to mailing label as BUSINESS PAPERS.
Merchandise samples without commercial value.	PS Form 2976-A, *Customs Declaration and Dispatch Note CP 72,* inside a PS Form 2976-E, *Customs Declaration Envelope CP 91.*
Merchandise and all articles subject to customs duty.	PS Form 2976-A, *Customs Declaration and Dispatch Note CP 72,* inside a PS Form 2976-E, *Customs Declaration Envelope CP 91.*

Size Limits (221.52)
Maximum length: 20 inches
Maximum length and girth combined: 68 inches

Notes:
1. Addressees are required to obtain import licenses/permits to receive most goods.
2. Coins; banknotes; currency notes, including paper money; securities of any kind payable to bearer; traveler's checks; platinum, gold, and silver; precious stones; jewelry; watches; and other valuable articles are prohibited in Express Mail International shipments to Azerbaijan.

Reciprocal Service Name: EMS

Country Code: AZ

Areas Served:
Express Mail International is available ***only*** to the following location:
370000 Baku

Priority Mail International (230) Price Group 4

Refer to Notice 123, *Price List*, for the applicable retail, commercial base, or commercial plus price.
Weight Limit: 70 lbs.

Note: *Ordinary Priority Mail International includes indemnity at no cost based on weight. (See 230.)*

Priority Mail International — Flat Rate
Flat Rate Envelopes or Small Flat Rate Priced Boxes: The maximum weight is 4 pounds. Refer to Notice 123, *Price List*, for the applicable retail, commercial base, or commercial plus price.

Flat Rate Boxes — Medium and Large: The maximum weight is 20 pounds, or the limit set by the individual country, whichever is less. Refer to Notice 123, *Price List*, for the retail, commercial base, or commercial plus price.

Insurance (232.92)
Available for **Priority Mail International merchandise parcels** only (see 323.72 for markings)

Insured Amount not over	Fee	Insured Amount not over	Fee
$50	$2.45	Add $1.15 for each additional $100 or fraction of insurance coverage.	
100	3.60		
200	4.75		
300	5.90		
400	7.05		
500	8.20	$2,915 max.	$36.95

Size Limits (231.22)
Maximum length: 60 inches
Maximum length and girth combined: 108 inches

First-Class Mail International (240) Price Group 4
For the prices and maximum weights for letters, large envelopes (flats), packages (small packets), and postcards, see Notice 123, *Price List*.

Size Limits
Letters: See 241.212
Postcards: See 241.221
Large Envelopes (Flats): See 241.232
Packages (Small Packets): See 241.242 and 241.243

Airmail M-bags (260) — Direct Sack to One Addressee Price Group 4

Refer to Notice 123, *Price List*, for the applicable retail, commercial base, or commercial plus price.
Weight Limit: 66 lbs.

Matter for the Blind (270)
Free when sent as First-Class Mail International, including Priority Mail International Flat Rate Envelopes and Small Flat Rate Priced Boxes. Weight limit: 4 pounds.
Free when sent as Priority Mail International. Weight limit: 15 pounds.

Extra Services

Certificate of Mailing (313)

Individual Pieces	Fee
Individual article (PS Form 3817)	$1.15
Firm mailing books (PS Form 3877), per article listed (minimum 3)	0.44
Duplicate copy of PS Form 3817 or PS Form 3877 (per page)	1.15
Bulk Quantities	**Fee**
First 1,000 pieces (or fraction thereof)	$6.70
Each additional 1,000 pieces (or fraction thereof)	0.80
Duplicate copy of PS Form 3606	1.15

COD and Certified **NOT** for International Mail

International Business Reply Service (382)
Fee: Envelopes up to 2 ounces $1.50; Cards $1.00

International Postal Money Order (371)
NOT Available

International Reply Coupons (381) **Fee:** $2.20

Registered Mail (330) **Fee:** $11.75
Maximum Indemnity: $47.33
Available for First-Class Mail International, including postcards and Flat Rate Envelopes and Small Flat Rate Priced Boxes, and matter for the blind or other physically handicapped persons. Not applicable to M-bags.

Restricted Delivery (350) **Fee:** $4.55
Available for registered mail with a return receipt.
Endorsements: A remettre en main propre.

Return Receipt (340) **Fee:** $2.35
Available for registered mail and insured Priority Mail International parcels only.

Bahamas

Country Conditions for Mailing

Prohibitions (130)
Obscene or indecent articles, books, pictures, printed matter.
Perishable infectious biological substances.
Perishable noninfectious biological substances.
Radioactive materials.
Skimmed milk in tins.

Restrictions
No list furnished.

Observations
None

Customs Forms Required (123)
First-Class Mail International items and Priority Mail International Flat Rate Envelopes and Small Flat Rate Priced Boxes:
PS Form 2976 (see 123.61)
Priority Mail International parcels:
PS Form 2976-A inside 2976-E (envelope)

Global Express Guaranteed (210) Price Group 7

Refer to Notice 123, *Price List*, for the applicable retail, commercial base, or commercial plus price.
Weight Limit: 70 lbs.

Insurance (212.5)

Insured Amount not over	Fee	Insured Amount not over	Fee
$100	No Fee	For document reconstruction insurance or non-document insurance coverage above $800, add $1.00 per $100 or fraction thereof, up to a maximum of $2,499 per shipment.	
200	$1.00		
300	2.00		
400	3.00		
500	4.00		
600	5.00		
700	6.00		
800	7.00	$2,499 max.	$24.00

Value Limit (212.1)
The maximum value of a GXG shipment to this country is $2,499 or a lesser amount if limited by content or value.

Size Limits (211.22)
The surface area of the address side of the item to be mailed must be large enough to completely contain the Global Express Guaranteed Air Waybill/Shipping Invoice (shipping label), postage, endorsement, and any applicable markings. The shipping label is approximately 5.5 inches high and 9.5 inches long.
Maximum length: 46 inches
Maximum width: 35 inches
Maximum height: 46 inches
Maximum length and girth combined: 108 inches

General Conditions for Mailing
See Publication 141, *Global Express Guaranteed Service Guide,* for information about areas served in the destination country, allowable contents, packaging and labeling requirements, tracking and tracing, service standards, and other conditions for mailing.

Express Mail International (220) Price Group 9

Refer to Notice 123, *Price List*, for the applicable retail, commercial base, or commercial plus price.
Weight Limit: 22 lbs.

Express Mail International — Flat Rate Envelope and Flat Rate Boxes
The maximum weight for the Express Mail International Flat Rate Envelope and the Express Mail International Flat Rate Boxes is 20 pounds. Refer to Notice 123, *Price List*, for the applicable retail, commercial base, or commercial plus price.

Insurance (222.8)
Available for **Express Mail International merchandise shipments** only

Insured Amount not over	Fee	Insured Amount not over	Fee
$100	No Fee	For insurance coverage above $2,000, add $1.50 for each $500 or fraction thereof, up to a maximum of $5,000 per shipment.	
200	$0.85		
500	2.35		
1,000	3.85		
1,500	5.35		
2,000	6.85	$5,000 max.	$15.85

Articles Admitted	Required Customs Form/Endorsement
Correspondence, business papers, and computer data.	No form required. Endorse item clearly next to mailing label as BUSINESS PAPERS.
Merchandise samples without commercial value.	PS Form 2976, *Customs — CN 22 and Sender's Declaration*.
Merchandise and all articles subject to customs duty.	PS Form 2976-A, *Customs Declaration and Dispatch Note CP 72,* inside a PS Form 2976-E, *Customs Declaration Envelope CP 91.*

Size Limits (221.52)
Maximum length: 36 inches
Maximum length and girth combined: 79 inches

Note:
Coins; banknotes; currency notes, including paper money; securities of any kind payable to bearer; traveler's checks; platinum, gold, and silver; precious stones; jewelry; watches; and other valuable articles are prohibited in Express Mail International shipments to the Bahamas.

Reciprocal Service Name: High Speed Mail (EMS)

Country Code: BS

Areas Served:
Freeport
Nassau
Paradise Island

Priority Mail International (230) Price Group 9

Refer to Notice 123, *Price List*, for the applicable retail, commercial base, or commercial plus price.
Weight Limit: 22 lbs.

Note: *Ordinary Priority Mail International includes indemnity at no cost based on weight. (See 230.)*

Priority Mail International — Flat Rate

Flat Rate Envelopes or Small Flat Rate Priced Boxes: The maximum weight is 4 pounds. Refer to Notice 123, *Price List*, for the applicable retail, commercial base, or commercial plus price.

Flat Rate Boxes — Medium and Large: The maximum weight is 20 pounds, or the limit set by the individual country, whichever is less. Refer to Notice 123, *Price List*, for the retail, commercial base, or commercial plus price.

Insurance (232.92)

Available for **Priority Mail International merchandise parcels** only (see 323.72 for markings)

Insured Amount not over	Fee	Insured Amount not over	Fee
$50	$2.45	Add $1.15 for each additional $100 or fraction of insurance coverage.	
100	3.60		
200	4.75		
300	5.90		
400	7.05		
500	8.20	$1,458 max.	$19.70
*** Note: Insurance for parcels addressed to locations other than Nassau or Freeport is limited to $560 max. (fee: $9.35).**			

Size Limits (231.22)

Maximum length: 42 inches
Maximum length and girth combined: 79 inches

First-Class Mail International (240) Price Group 9

For the prices and maximum weights for letters, large envelopes (flats), packages (small packets), and postcards, see Notice 123, *Price List*.

Size Limits

Letters: See 241.212
Postcards: See 241.221
Large Envelopes (Flats): See 241.232
Packages (Small Packets): See 241.242 and 241.243

Airmail M-bags (260) — Direct Sack to One Addressee Price Group 9

Refer to Notice 123, *Price List*, for the applicable retail, commercial base, or commercial plus price.
Weight Limit: 66 lbs.

Matter for the Blind (270)

Free when sent as First-Class Mail International, including Priority Mail International Flat Rate Envelopes and Small Flat Rate Priced Boxes. Weight limit: 4 pounds.
Free when sent as Priority Mail International. Weight limit: 15 pounds.

Extra Services

Certificate of Mailing (313)

Individual Pieces	Fee
Individual article (PS Form 3817)	$1.15
Firm mailing books (PS Form 3877), per article listed (minimum 3)	0.44
Duplicate copy of PS Form 3817 or PS Form 3877 (per page)	1.15
Bulk Quantities	**Fee**
First 1,000 pieces (or fraction thereof)	$6.70
Each additional 1,000 pieces (or fraction thereof)	0.80
Duplicate copy of PS Form 3606	1.15

COD and Certified

NOT for International Mail

International Business Reply Service (382)

Fee: Envelopes up to 2 ounces $1.50; Cards $1.00

International Postal Money Order (371)

Use MO Form MP1
Maximum Amount Available: $700 **Fee:** $4.45
Money Order Inquiry: **Fee:** $5.50

International Reply Coupons (381)

Fee: $2.20

Registered Mail (330)

Fee: $11.75

Maximum Indemnity: $47.33
Available for First-Class Mail International, including postcards and Flat Rate Envelopes and Small Flat Rate Priced Boxes, and matter for the blind or other physically handicapped persons. Not applicable to M-bags.

Restricted Delivery (350)

NOT Available

Return Receipt (340)

Fee: $2.35

Available for registered mail and insured Priority Mail International parcels only.

Bahrain

Country Conditions for Mailing

Prohibitions (130)
Arms and ammunition.
Cultured, imitation, artificial, or bleached pearls.
Perishable infectious biological substances.
Perishable noninfectious biological substances.
Radioactive materials.

Restrictions
No list furnished.

Observations
None

Customs Forms Required (123)
First-Class Mail International items and Priority Mail International Flat Rate Envelopes and Small Flat Rate Priced Boxes:
PS Form 2976 (see 123.61)
Priority Mail International parcels:
PS Form 2976-A inside 2976-E (envelope)

Global Express Guaranteed (210) Price Group 6

Refer to Notice 123, *Price List*, for the applicable retail, commercial base, or commercial plus price.
Weight Limit: 70 lbs.

Insurance (212.5)

Insured Amount not over	Fee	Insured Amount not over	Fee
$100	No Fee	For document reconstruction insurance or non-document insurance coverage above $800, add $1.00 per $100 or fraction thereof, up to a maximum of $2,499 per shipment.	
200	$1.00		
300	2.00		
400	3.00		
500	4.00		
600	5.00		
700	6.00		
800	7.00	$2,499 max.	$24.00

Value Limit (212.1)
The maximum value of a GXG shipment to this country is $2,499 or a lesser amount if limited by content or value.

Size Limits (211.22)
The surface area of the address side of the item to be mailed must be large enough to completely contain the Global Express Guaranteed Air Waybill/Shipping Invoice (shipping label), postage, endorsement, and any applicable markings. The shipping label is approximately 5.5 inches high and 9.5 inches long.
Maximum length: 46 inches
Maximum width: 35 inches
Maximum height: 46 inches
Maximum length and girth combined: 108 inches

General Conditions for Mailing
See Publication 141, *Global Express Guaranteed Service Guide,* for information about areas served in the destination country, allowable contents, packaging and labeling requirements, tracking and tracing, service standards, and other conditions for mailing.

Express Mail International (220) Price Group 8

Refer to Notice 123, *Price List*, for the applicable retail, commercial base, or commercial plus price.
Weight Limit: 44 lbs.

Express Mail International — Flat Rate Envelope and Flat Rate Boxes
The maximum weight for the Express Mail International Flat Rate Envelope and the Express Mail International Flat Rate Boxes is 20 pounds. Refer to Notice 123, *Price List*, for the applicable retail, commercial base, or commercial plus price.

Insurance (222.8)
Available for **Express Mail International merchandise shipments** only

Insured Amount not over	Fee	Insured Amount not over	Fee
$100	No Fee	For insurance coverage above $2,000, add $1.50 for each $500 or fraction thereof, up to a maximum of $5,000 per shipment.	
200	$0.85		
500	2.35		
1,000	3.85		
1,500	5.35		
2,000	6.85	$5,000 max.	$15.85

Articles Admitted	Required Customs Form/Endorsement
Business documents, business letters, non-negotiable instruments, computer printouts, cancelled checks, periodicals, and newspapers.	No form required. Endorse item clearly next to mailing label as BUSINESS PAPERS.
Merchandise samples without commercial value, microfilm, and microfiche.	PS Form 2976, *Customs — CN 22 and Sender's Declaration*.
Merchandise and all articles subject to customs duty.	PS Form 2976-A, *Customs Declaration and Dispatch Note CP 72,* inside a PS Form 2976-E, *Customs Declaration Envelope CP 91.* Identify contents completely and state whether import license, if required, is attached.

Size Limits (221.52)
Maximum length: 36 inches
Maximum length and girth combined: 79 inches

Note:
Coins; banknotes; currency notes, including paper money; securities of any kind payable to bearer; traveler's checks; platinum, gold, and silver; precious stones; jewelry; watches; and other valuable articles are prohibited in Express Mail International shipments to Bahrain.

Reciprocal Service Name: Barid/Mumtaz Post

Country Code: BH

Areas Served: All

Priority Mail International (230) Price Group 8

Refer to Notice 123, *Price List*, for the applicable retail, commercial base, or commercial plus price.
Weight Limit: 44 lbs.

Note: *Ordinary Priority Mail International includes indemnity at no cost based on weight. (See 230.)*

Priority Mail International — Flat Rate

Flat Rate Envelopes or Small Flat Rate Priced Boxes: The maximum weight is 4 pounds. Refer to Notice 123, *Price List*, for the applicable retail, commercial base, or commercial plus price.

Flat Rate Boxes — Medium and Large: The maximum weight is 20 pounds, or the limit set by the individual country, whichever is less. Refer to Notice 123, *Price List*, for the retail, commercial base, or commercial plus price.

Insurance (232.92) NOT Available

Size Limits (231.22)

Maximum length: 42 inches
Maximum length and girth combined: 79 inches

First-Class Mail International (240) Price Group 8

For the prices and maximum weights for letters, large envelopes (flats), packages (small packets), and postcards, see Notice 123, *Price List*.

Size Limits

Letters: See 241.212
Postcards: See 241.221
Large Envelopes (Flats): See 241.232
Packages (Small Packets): See 241.242 and 241.243

Airmail M-bags (260) — Direct Sack to One Addressee Price Group 8

Refer to Notice 123, *Price List*, for the applicable retail, commercial base, or commercial plus price.
Weight Limit: 66 lbs.

Matter for the Blind (270)

Free when sent as First-Class Mail International, including Priority Mail International Flat Rate Envelopes and Small Flat Rate Priced Boxes. Weight limit: 4 pounds.
Free when sent as Priority Mail International. Weight limit: 15 pounds.

Extra Services

Certificate of Mailing (313)

Individual Pieces	**Fee**
Individual article (PS Form 3817)	$1.15
Firm mailing books (PS Form 3877), per article listed (minimum 3)	0.44
Duplicate copy of PS Form 3817 or PS Form 3877 (per page)	1.15
Bulk Quantities	**Fee**
First 1,000 pieces (or fraction thereof)	$6.70
Each additional 1,000 pieces (or fraction thereof)	0.80
Duplicate copy of PS Form 3606	1.15

COD and Certified **NOT** for International Mail

International Business Reply Service (382)

Fee: Envelopes up to 2 ounces $1.50; Cards $1.00

International Postal Money Order (371)

NOT Available

International Reply Coupons (381) **Fee:** $2.20

Registered Mail (330) **Fee:** $11.75

Maximum Indemnity: $47.33
Available for First-Class Mail International, including postcards and Flat Rate Envelopes and Small Flat Rate Priced Boxes, and matter for the blind or other physically handicapped persons. Not applicable to M-bags.

Restricted Delivery (350) **Fee:** $4.55

Available for registered mail with a return receipt.
Endorsements: A remettre en main propre.

Return Receipt (340) **Fee:** $2.35

Available for registered mail only.

Bangladesh

Country Conditions for Mailing

Prohibitions (130)

American cotton.
Arms, ammunition.
Coffee plants, coffee seeds and coffee beans.
Coins; banknotes; currency notes; traveler's checks; gold, silver, platinum, manufactured or not; securities payable to bearer; precious stones; and other valuable articles.
Hemp.
Obscene books, pamphlets, papers, drawings, paintings, figures, or articles.
Perishable infectious biological substances.
Perishable noninfectious biological substances.
Piece goods ordinarily sold by the yard or by the piece manufactured outside of Bangladesh and not stamped to indicate the length in meters, yards, or fractions thereof.
Quinine, colored pink.
Radioactive materials.

Restrictions

No list furnished.

Observations

None

Customs Forms Required (123)

First-Class Mail International items and Priority Mail International Flat Rate Envelopes and Small Flat Rate Priced Boxes:
PS Form 2976 (see 123.61)
Priority Mail International parcels:
PS Form 2976-A inside 2976-E (envelope)

Global Express Guaranteed (210) Price Group 6

Refer to Notice 123, *Price List*, for the applicable retail, commercial base, or commercial plus price.

Weight Limit: 70 lbs.

Insurance (212.5)

Insured Amount not over	Fee	Insured Amount not over	Fee
$100	No Fee	For document reconstruction insurance or non-document insurance coverage above $800, add $1.00 per $100 or fraction thereof, up to a maximum of $2,499 per shipment.	
200	$1.00		
300	2.00		
400	3.00		
500	4.00		
600	5.00		
700	6.00		
800	7.00	$2,499 max.	$24.00

Value Limit (212.1)

The maximum value of a GXG shipment to this country is $2,499 or a lesser amount if limited by content or value.

Size Limits (211.22)

The surface area of the address side of the item to be mailed must be large enough to completely contain the Global Express Guaranteed Air Waybill/Shipping Invoice (shipping label), postage, endorsement, and any applicable markings. The shipping label is approximately 5.5 inches high and 9.5 inches long.
Maximum length: 46 inches
Maximum width: 35 inches
Maximum height: 46 inches
Maximum length and girth combined: 108 inches

General Conditions for Mailing

See Publication 141, *Global Express Guaranteed Service Guide,* for information about areas served in the destination country, allowable contents, packaging and labeling requirements, tracking and tracing, service standards, and other conditions for mailing.

Express Mail International (220) Price Group 6

Refer to Notice 123, *Price List*, for the applicable retail, commercial base, or commercial plus price.

Weight Limit: 44 lbs.

Express Mail International — Flat Rate Envelope and Flat Rate Boxes

The maximum weight for the Express Mail International Flat Rate Envelope and the Express Mail International Flat Rate Boxes is 20 pounds. Refer to Notice 123, *Price List*, for the applicable retail, commercial base, or commercial plus price.

Insurance (222.8)

Available for **Express Mail International merchandise shipments** only

Insured Amount not over	Fee	Insured Amount not over	Fee
$100	No Fee	For insurance coverage above $2,000, add $1.50 for each $500 or fraction thereof, up to a maximum of $5,000 per shipment.	
200	$0.85		
500	2.35		
1,000	3.85		
1,500	5.35		
2,000	6.85	$5,000 max.	$15.85

Articles Admitted	Required Customs Form/Endorsement
Personal correspondence, business papers, and documents.	PS Form 2976, *Customs — CN 22 and Sender's Declaration*.
Merchandise samples without commercial value.	PS Form 2976-A, *Customs Declaration and Dispatch Note CP 72,* inside a PS Form 2976-E, *Customs Declaration Envelope CP 91.*
Merchandise and all articles subject to customs duty.	PS Form 2976-A, *Customs Declaration and Dispatch Note CP 72,* inside a PS Form 2976-E, *Customs Declaration Envelope CP 91.*

Size Limits (221.52)

Maximum length: 36 inches
Maximum length and girth combined: 79 inches

Note:

Coins; banknotes; currency notes, including paper money; securities of any kind payable to bearer; traveler's checks; platinum, gold, and silver; precious stones; jewelry; watches; and other valuable articles are prohibited in Express Mail International shipments to Bangladesh.

Reciprocal Service Name: Guaranteed Express Post (GEP) Service

Country Code: BD

Areas Served:

City	Postal Zone
Barisal	
Bogra	
Chittagong	4000, 4100, 4202, 4204–4216, 4218, 4220, and 4221
Comilla	
Dhaka	1000, 1100, 1203–1219, 1221, 1222, and 1225
Dinajpur	
Faridpur	
Hobigoni	
Jamalpur	
Jessore	
Khulna	9000, 9100, and 9201–9207
Kushtia	
Mymensingh	
Noakhali	
Pabna	
Rajshahi	6000, 6100, and 6201–6206
Rangpur	
Sylhet	
Tangail	

Priority Mail International (230) Price Group 6

Refer to Notice 123, *Price List*, for the applicable retail, commercial base, or commercial plus price.

Weight Limit: 44 lbs.

Note: *Ordinary Priority Mail International includes indemnity at no cost based on weight. (See 230.)*

Priority Mail International — Flat Rate

Flat Rate Envelopes or Small Flat Rate Priced Boxes: The maximum weight is 4 pounds. Refer to Notice 123, *Price List*, for the applicable retail, commercial base, or commercial plus price.

Flat Rate Boxes — Medium and Large: The maximum weight is 20 pounds, or the limit set by the individual country, whichever is less. Refer to Notice 123, *Price List*, for the retail, commercial base, or commercial plus price.

Insurance (232.92)

Available for **Priority Mail International merchandise parcels** only (see 323.72 for markings)

Insured Amount not over	Fee	Insured Amount not over	Fee
$50	$2.45		
100	3.60	Add $1.15 for each additional $100 or fraction of insurance coverage.	
200	4.75		
300	5.90		
400	7.05		
500	8.20	$5,000 max.	$59.95

Size Limits (231.22)

Maximum length: 42 inches
Maximum length and girth combined: 79 inches

First-Class Mail International (240) Price Group 6

For the prices and maximum weights for letters, large envelopes (flats), packages (small packets), and postcards, see Notice 123, *Price List*.

Size Limits

Letters: See 241.212
Postcards: See 241.221
Large Envelopes (Flats): See 241.232
Packages (Small Packets): See 241.242 and 241.243

Airmail M-bags (260) — Direct Sack to One Addressee Price Group 6

Refer to Notice 123, *Price List*, for the applicable retail, commercial base, or commercial plus price.

Weight Limit: 66 lbs.

Matter for the Blind (270)

Free when sent as First-Class Mail International, including Priority Mail International Flat Rate Envelopes and Small Flat Rate Priced Boxes. Weight limit: 4 pounds.
Free when sent as Priority Mail International. Weight limit: 15 pounds.

Extra Services

Certificate of Mailing (313)

Individual Pieces	Fee
Individual article (PS Form 3817)	$1.15
Firm mailing books (PS Form 3877), per article listed (minimum 3)	0.44
Duplicate copy of PS Form 3817 or PS Form 3877 (per page)	1.15
Bulk Quantities	**Fee**
First 1,000 pieces (or fraction thereof)	$6.70
Each additional 1,000 pieces (or fraction thereof)	0.80
Duplicate copy of PS Form 3606	1.15

COD and Certified

NOT for International Mail

International Business Reply Service (382)

Fee: Envelopes up to 2 ounces $1.50; Cards $1.00

International Postal Money Order (371)

NOT Available

International Reply Coupons (381)

Fee: $2.20

Registered Mail (330)

Fee: $11.75

Maximum Indemnity: $47.33
Available for First-Class Mail International, including postcards and Flat Rate Envelopes and Small Flat Rate Priced Boxes, and matter for the blind or other physically handicapped persons. Not applicable to M-bags.

Restricted Delivery (350)

NOT Available

Return Receipt (340)

Fee: $2.35

Available for registered mail and insured Priority Mail International parcels only.

Barbados

Country Conditions for Mailing

Prohibitions (130)
Radioactive materials.

Restrictions
No list furnished.

Observations
None

Customs Forms Required (123)
First-Class Mail International items and Priority Mail International Flat Rate Envelopes and Small Flat Rate Priced Boxes:
PS Form 2976 (see 123.61)
Priority Mail International parcels:
PS Form 2976-A inside 2976-E (envelope)

Global Express Guaranteed (210) Price Group 7

Refer to Notice 123, *Price List*, for the applicable retail, commercial base, or commercial plus price.

Weight Limit: 70 lbs.

Insurance (212.5)

Insured Amount not over	Fee	Insured Amount not over	Fee
$100	No Fee	For document reconstruction insurance or non-document insurance coverage above $800, add $1.00 per $100 or fraction thereof, up to a maximum of $2,499 per shipment.	
200	$1.00		
300	2.00		
400	3.00		
500	4.00		
600	5.00		
700	6.00		
800	7.00	$2,499 max.	$24.00

Value Limit (212.1)
The maximum value of a GXG shipment to this country is $2,499 or a lesser amount if limited by content or value.

Size Limits (211.22)
The surface area of the address side of the item to be mailed must be large enough to completely contain the Global Express Guaranteed Air Waybill/Shipping Invoice (shipping label), postage, endorsement, and any applicable markings. The shipping label is approximately 5.5 inches high and 9.5 inches long.
Maximum length: 46 inches
Maximum width: 35 inches
Maximum height: 46 inches
Maximum length and girth combined: 108 inches

General Conditions for Mailing
See Publication 141, *Global Express Guaranteed Service Guide,* for information about areas served in the destination country, allowable contents, packaging and labeling requirements, tracking and tracing, service standards, and other conditions for mailing.

Express Mail International (220) Price Group 9

Refer to Notice 123, *Price List*, for the applicable retail, commercial base, or commercial plus price.

Weight Limit: 66 lbs.

Express Mail International — Flat Rate Envelope and Flat Rate Boxes

The maximum weight for the Express Mail International Flat Rate Envelope and the Express Mail International Flat Rate Boxes is 20 pounds. Refer to Notice 123, *Price List*, for the applicable retail, commercial base, or commercial plus price.

Insurance (222.8)
Available for **Express Mail International merchandise shipments** only

Insured Amount not over	Fee	Insured Amount not over	Fee
$100	No Fee	For insurance coverage above $2,000, add $1.50 for each $500 or fraction thereof, up to a maximum of $5,000 per shipment.	
200	$0.85		
500	2.35		
1,000	3.85		
1,500	5.35		
2,000	6.85	$5,000 max.	$15.85

Articles Admitted	Required Customs Form/Endorsement
Business papers and documents.	No forms required. Endorse item clearly next to mailing label as BUSINESS PAPERS.
Merchandise samples without commercial value, microfilm, and microfiche.	PS Form 2976, *Customs — CN 22 and Sender's Declaration*.
Merchandise, advertising materials, and all articles subject to customs duty.	PS Form 2976-A, *Customs Declaration and Dispatch Note CP 72,* inside a PS Form 2976-E, *Customs Declaration Envelope CP 91.*

Size Limits (221.52)
Maximum length: 36 inches
Maximum length and girth combined: 79 inches

Note:
Coins; banknotes; currency notes, including paper money; securities of any kind payable to bearer; traveler's checks; platinum, gold, and silver; precious stones; jewelry; watches; and other valuable articles are prohibited in Express Mail International shipments to Barbados.

Reciprocal Service Name: Express Mail Service

Country Code: BB

Areas Served: All

Priority Mail International (230) Price Group 9

Refer to Notice 123, *Price List*, for the applicable retail, commercial base, or commercial plus price.

Weight Limit: 44 lbs.

Note: *Ordinary Priority Mail International includes indemnity at no cost based on weight. (See 230.)*

Priority Mail International — Flat Rate

Flat Rate Envelopes or Small Flat Rate Priced Boxes: The maximum weight is 4 pounds. Refer to Notice 123, *Price List*, for the applicable retail, commercial base, or commercial plus price.

Flat Rate Boxes — Medium and Large: The maximum weight is 20 pounds, or the limit set by the individual country, whichever is less. Refer to Notice 123, *Price List*, for the retail, commercial base, or commercial plus price.

Insurance (232.92)

Available for **Priority Mail International merchandise parcels** only (see 323.72 for markings)

Insured Amount not over	Fee
$50	$2.45
100	3.60
200	4.75
238 max.	5.90

Size Limits (231.22)

Maximum length: 42 inches
Maximum length and girth combined: 79 inches

First-Class Mail International (240) Price Group 9

For the prices and maximum weights for letters, large envelopes (flats), packages (small packets), and postcards, see Notice 123, *Price List*.

Size Limits

Letters: See 241.212
Postcards: See 241.221
Large Envelopes (Flats): See 241.232
Packages (Small Packets): See 241.242 and 241.243

Airmail M-bags (260) — Direct Sack to One Addressee Price Group 9

Refer to Notice 123, *Price List*, for the applicable retail, commercial base, or commercial plus price.
Weight Limit: 66 lbs.

Matter for the Blind (270)

Free when sent as First-Class Mail International, including Priority Mail International Flat Rate Envelopes and Small Flat Rate Priced Boxes. Weight limit: 4 pounds.
Free when sent as Priority Mail International. Weight limit: 15 pounds.

Extra Services

Certificate of Mailing (313)

Individual Pieces	Fee
Individual article (PS Form 3817)	$1.15
Firm mailing books (PS Form 3877), per article listed (minimum 3)	0.44
Duplicate copy of PS Form 3817 or PS Form 3877 (per page)	1.15
Bulk Quantities	**Fee**
First 1,000 pieces (or fraction thereof)	$6.70
Each additional 1,000 pieces (or fraction thereof)	0.80
Duplicate copy of PS Form 3606	1.15

COD and Certified **NOT** for International Mail

International Business Reply Service (382)

Fee: Envelopes up to 2 ounces $1.50; Cards $1.00

International Postal Money Order (371)

Use MO Form MP1
Maximum Amount Available: $700 **Fee:** $4.45
Money Order Inquiry: **Fee:** $5.50

International Reply Coupons (381) **Fee:** $2.20

Registered Mail (330) **Fee:** $11.75

Maximum Indemnity: $47.33
Available for First-Class Mail International, including postcards and Flat Rate Envelopes and Small Flat Rate Priced Boxes, and matter for the blind or other physically handicapped persons. Not applicable to M-bags.

Restricted Delivery (350) NOT Available

Return Receipt (340) **Fee:** $2.35

Available for registered mail and insured Priority Mail International parcels only.

Belarus

Country Conditions for Mailing

Prohibitions (130)

Alcoholic liquids.
All arms and ammunition and parts and accessories thereof.
Articles of cultural value.
Currencies of the Republic of Belarus and the Russian Federation.
Explosive or combustible substances or other dangerous matter.
Metallized yarn made with or made of gold thread; ornamental trimming or woven fabric made with or made of gold thread.
Opium and other substances containing narcotics.
Perishable items.
Photographic and cinematographic films, undeveloped photographic plates, photographic paper.
Plants and plant seeds.
Precious stones in any form and condition, natural diamonds, except for jewelry.
Printed books, newspapers, pictures and other products of the printing industry; manuscripts, typescripts, and plans containing information that may be harmful to the political and economic interests of the country and to the health and morality of its citizens.
Radioactive materials.
The government of Belarus has instituted a temporary ban against the importation of all animal products that are for human and animal consumption. This includes meats, poultry, milk and dairy products, feeds, and other animal byproducts.
Tobacco and manufactured tobacco products.
Weapons of any kind, ammunition and parts thereof.

Restrictions

Articles subject to customs duty may not be sent in ordinary or registered First-Class Mail International items, including the Priority Mail International Flat Rate Envelope and Small Flat Rate Priced Boxes.
Cancelled and uncancelled stamps may be sent as part of a prescribed philatelic exchange.
Coins, bank notes, currency notes (paper money); securities of any kind payable to bearer; traveler's checks, platinum, gold, and silver (manufactured or not); precious stones, jewelry, and other valuable articles are admitted only in insured Priority Mail International parcels. Importation of foreign currency is limited to a maximum equivalent of 200 USD.
Medicaments and vitamin preparations require authorization issued by the Public Health of Belarus.
Veterinary preparations, biological materials, and collectors' items of animal origin require written authorization issued by the State Veterinary Inspectorate of the Ministry of Agriculture and Foods in Belarus.

Observations

Depending on the nature and origin, many articles are regulated and admitted only on presentation of permission from the authorized bodies in Belarus.

Customs Forms Required (123)

First-Class Mail International items and Priority Mail International Flat Rate Envelopes and Small Flat Rate Priced Boxes:
PS Form 2976 (see 123.61)
Priority Mail International parcels:
PS Form 2976-A inside 2976-E (envelope)

Global Express Guaranteed (210) Price Group 4

Refer to Notice 123, *Price List*, for the applicable retail, commercial base, or commercial plus price.
Weight Limit: 70 lbs.

Insurance (212.5)

Insured Amount not over	Fee	Insured Amount not over	Fee
$100	No Fee	For document reconstruction insurance or non-document insurance coverage above $800, add $1.00 per $100 or fraction thereof, up to a maximum of $2,499 per shipment.	
200	$1.00		
300	2.00		
400	3.00		
500	4.00		
600	5.00		
700	6.00		
800	7.00	$2,499 max.	$24.00

Value Limit (212.1)

The maximum value of a GXG shipment to this country is $2,499 or a lesser amount if limited by content or value.

Size Limits (211.22)

The surface area of the address side of the item to be mailed must be large enough to completely contain the Global Express Guaranteed Air Waybill/Shipping Invoice (shipping label), postage, endorsement, and any applicable markings. The shipping label is approximately 5.5 inches high and 9.5 inches long.
Maximum length: 46 inches
Maximum width: 26 inches
Maximum height: 35 inches
Maximum length and girth combined: 108 inches

General Conditions for Mailing

See Publication 141, *Global Express Guaranteed Service Guide,* for information about areas served in the destination country, allowable contents, packaging and labeling requirements, tracking and tracing, service standards, and other conditions for mailing.

Express Mail International (220) Price Group 4

Refer to Notice 123, *Price List*, for the applicable retail, commercial base, or commercial plus price.
Weight Limit: 44 lbs.

Express Mail International — Flat Rate Envelope and Flat Rate Boxes

The maximum weight for the Express Mail International Flat Rate Envelope and the Express Mail International Flat Rate Boxes is 20 pounds. Refer to Notice 123, *Price List*, for the applicable retail, commercial base, or commercial plus price.

Insurance (222.8)

Available for **Express Mail International merchandise shipments** only

Insured Amount not over	Fee	Insured Amount not over	Fee
$100	No Fee	For insurance coverage above $2,000, add $1.50 for each $500 or fraction thereof, up to a maximum of $5,000 per shipment.	
200	$0.85		
500	2.35		
1,000	3.85		
1,500	5.35		
2,000	6.85	$5,000 max.	$15.85

Articles Admitted	Required Customs Form/Endorsement
Correspondence, business papers, and documents.	PS Form 2976, Customs — *CN 22 and Sender's Declaration*. Endorse item clearly next to mailing label as BUSINESS PAPERS.
Merchandise samples without commercial value.	PS Form 2976-A, *Customs Declaration and Dispatch Note CP 72,* inside a PS Form 2976-E, *Customs Declaration Envelope CP 91.*
Merchandise and all articles subject to customs duty.	PS Form 2976-A, *Customs Declaration and Dispatch Note CP 72,* inside a PS Form 2976-E, *Customs Declaration Envelope CP 91.*

Size Limits (221.52)
Maximum length: 36 inches
Maximum length and girth combined: 79 inches

Notes:
1. Addressees are required to obtain import licenses/permits to receive most goods.
2. Coins; banknotes; currency notes, including paper money; securities of any kind payable to bearer; traveler's checks; platinum, gold, and silver; precious stones; jewelry; watches; and other valuable articles are prohibited in Express Mail International shipments to Belarus.

Reciprocal Service Name: EMS

Country Code: BY

Areas Served: All

Priority Mail International (230) Price Group 4

Refer to Notice 123, *Price List*, for the applicable retail, commercial base, or commercial plus price.
Weight Limit: 66 lbs.

Note: *Ordinary Priority Mail International includes indemnity at no cost based on weight. (See 230.)*

Priority Mail International — Flat Rate
Flat Rate Envelopes or Small Flat Rate Priced Boxes: The maximum weight is 4 pounds. Refer to Notice 123, *Price List*, for the applicable retail, commercial base, or commercial plus price.

Flat Rate Boxes — Medium and Large: The maximum weight is 20 pounds, or the limit set by the individual country, whichever is less. Refer to Notice 123, *Price List*, for the retail, commercial base, or commercial plus price.

Insurance (232.92)
Available for **Priority Mail International merchandise parcels** only (see 323.72 for markings)

Insured Amount not over	Fee	Insured Amount not over	Fee
$50	$2.45		
100	3.60	Add $1.15 for each additional $100 or fraction of insurance coverage.	
200	4.75		
300	5.90		
400	7.05		
500	8.20	$1,312 max.	$18.55

Size Limits (231.22)
Maximum length: 42 inches
Maximum length and girth combined: 79 inches

First-Class Mail International (240) Price Group 4
For the prices and maximum weights for letters, large envelopes (flats), packages (small packets), and postcards, see Notice 123, *Price List*.

Size Limits
Letters: See 241.212
Postcards: See 241.221
Large Envelopes (Flats): See 241.232
Packages (Small Packets): See 241.242 and 241.243

Airmail M-bags (260) — Direct Sack to One Addressee Price Group 4

Refer to Notice 123, *Price List*, for the applicable retail, commercial base, or commercial plus price.
Weight Limit: 66 lbs.

Matter for the Blind (270)
Free when sent as First-Class Mail International, including Priority Mail International Flat Rate Envelopes and Small Flat Rate Priced Boxes. Weight limit: 4 pounds.
Free when sent as Priority Mail International. Weight limit: 15 pounds.

Extra Services

Certificate of Mailing (313)

Individual Pieces	Fee
Individual article (PS Form 3817)	$1.15
Firm mailing books (PS Form 3877), per article listed (minimum 3)	0.44
Duplicate copy of PS Form 3817 or PS Form 3877 (per page)	1.15
Bulk Quantities	**Fee**
First 1,000 pieces (or fraction thereof)	$6.70
Each additional 1,000 pieces (or fraction thereof)	0.80
Duplicate copy of PS Form 3606	1.15

COD and Certified **NOT** for International Mail

International Business Reply Service (382)
Fee: Envelopes up to 2 ounces $1.50; Cards $1.00

International Postal Money Order (371)
NOT Available

International Reply Coupons (381) **Fee:** $2.20

Registered Mail (330) **Fee:** $11.75
Maximum Indemnity: $47.33
Available for First-Class Mail International, including postcards and Flat Rate Envelopes and Small Flat Rate Priced Boxes, and matter for the blind or other physically handicapped persons. Not applicable to M-bags.

Restricted Delivery (350) **Fee:** $4.55
Available for registered mail with a return receipt.
Endorsements: A remettre en main propre.

Return Receipt (340) **Fee:** $2.35
Available for registered mail and insured Priority Mail International parcels only.

Belgium

Country Conditions for Mailing

Prohibitions (130)
Arms and weapons.
Bronze, copper, and nickel coins not legal tender in Belgium, unless imported for collections.
Human remains.
Live plants and animals.
Perishable infectious biological substances.
Radioactive materials.

Restrictions
No list furnished.

Observations
1. Priority Mail International parcels must have a street address. Delivery cannot be made to post office boxes. A local telephone number for the addressee should be provided.
2. For Priority Mail International parcels, an invoice, in duplicate, is required for all commercial shipments regardless of value and all personal shipments valued at $300 or more. The invoices must be affixed to the outside of the parcel or may be enclosed in PS Form 2976-E with the customs declaration.
3. Import permits or licenses are required for many types of goods; therefore, the sender should ascertain from the addressee before mailing whether the necessary documents are held.
4. Gift shipments for private individuals for their personal use are exempt from the license requirement provided the value of the shipment does not exceed 74 euros.

Customs Forms Required (123)
First-Class Mail International items and Priority Mail International Flat Rate Envelopes and Small Flat Rate Priced Boxes:
PS Form 2976 (see 123.61)
Priority Mail International parcels:
PS Form 2976-A inside 2976-E (envelope)

Global Express Guaranteed (210) Price Group 3

Refer to Notice 123, *Price List*, for the applicable retail, commercial base, or commercial plus price.
Weight Limit: 70 lbs.

Insurance (212.5)

Insured Amount not over	Fee	Insured Amount not over	Fee
$100	No Fee	For document reconstruction insurance or non-document insurance coverage above $800, add $1.00 per $100 or fraction thereof, up to a maximum of $2,499 per shipment.	
200	$1.00		
300	2.00		
400	3.00		
500	4.00		
600	5.00		
700	6.00		
800	7.00	$2,499 max.	$24.00

Value Limit (212.1)
The maximum value of a GXG shipment to this country is $2,499 or a lesser amount if limited by content or value.

Size Limits (211.22)
The surface area of the address side of the item to be mailed must be large enough to completely contain the Global Express Guaranteed Air Waybill/Shipping Invoice (shipping label), postage, endorsement, and any applicable markings. The shipping label is approximately 5.5 inches high and 9.5 inches long.
Maximum length: 46 inches
Maximum width: 35 inches
Maximum height: 46 inches
Maximum length and girth combined: 108 inches

General Conditions for Mailing
See Publication 141, *Global Express Guaranteed Service Guide,* for information about areas served in the destination country, allowable contents, packaging and labeling requirements, tracking and tracing, service standards, and other conditions for mailing.

Express Mail International (220) Price Group 5

Refer to Notice 123, *Price List*, for the applicable retail, commercial base, or commercial plus price.
Weight Limit: 66 lbs.

Express Mail International — Flat Rate Envelope and Flat Rate Boxes
The maximum weight for the Express Mail International Flat Rate Envelope and the Express Mail International Flat Rate Boxes is 20 pounds. Refer to Notice 123, *Price List*, for the applicable retail, commercial base, or commercial plus price.

Insurance (222.8)
Available for **Express Mail International merchandise shipments** only

Insured Amount not over	Fee
$100	No Fee
200	$0.85
500	2.35
650 max.	3.85

Articles Admitted	Required Customs Form/Endorsement
Business correspondence, commercial papers and documents, and clearances between financial institutions.	PS Form 2976, *Customs — CN 22 and Sender's Declaration*. Endorse item clearly next to mailing label as BUSINESS PAPERS.
Merchandise samples without commercial value, computer data including computer cards, magnetic tape, microfilm, and microfiche.	PS Form 2976-A, *Customs Declaration and Dispatch Note CP 72*, inside a PS Form 2976-E, *Customs Declaration Envelope CP 91*.
Merchandise and all articles subject to customs duty.	PS Form 2976-A, *Customs Declaration and Dispatch Note CP 72*, inside a PS Form 2976-E, *Customs Declaration Envelope CP 91*. An invoice, in duplicate, is required for all commercial shipments regardless of value and all personal shipments valued at $300 or more. The invoices must be either affixed to the outside of the parcel or enclosed in PS Form 2976-E with the customs declaration.

Size Limits (221.52)
Maximum length: 60 inches
Maximum length and girth combined: 108 inches

Notes:
1. An invoice, in duplicate, is required for all commercial shipments regardless of value and for all personal shipments valued at $300 or more. The invoices must be either affixed to the outside of the parcel or enclosed in PS Form 2976-E with the customs declaration.
2. Arms, weapons, and human remains are prohibited.
3. Coins; banknotes; currency notes, including paper money; securities of any kind payable to bearer; traveler's checks; platinum, gold, and silver; precious stones; jewelry; watches; and other valuable articles are prohibited in Express Mail International shipments to Belgium.
4. Express Mail International shipments must have a street address. Post office box addresses cannot be used. A local telephone number for addressee should be provided if possible.

Reciprocal Service Name: Datapost

Country Code: BE

Areas Served: All

Priority Mail International (230) Price Group 5

Refer to Notice 123, *Price List*, for the applicable retail, commercial base, or commercial plus price.
Weight Limit: 66 lbs.

Note: *Ordinary Priority Mail International includes indemnity at no cost based on weight. (See 230.)*

Priority Mail International — Flat Rate
Flat Rate Envelopes or Small Flat Rate Priced Boxes: The maximum weight is 4 pounds. Refer to Notice 123, *Price List*, for the applicable retail, commercial base, or commercial plus price.

Flat Rate Boxes — Medium and Large: The maximum weight is 20 pounds, or the limit set by the individual country, whichever is less. Refer to Notice 123, *Price List*, for the retail, commercial base, or commercial plus price.

Insurance (232.92)
Available for **Priority Mail International merchandise parcels** only (see 323.72 for markings)

Insured Amount not over	Fee
$50	$2.45
100	3.60
200	4.75
300	5.90
400	7.05
500	8.20
600	9.35
650 max.	10.50

Size Limits (231.22)
Maximum length: 60 inches
Maximum length and girth combined: 108 inches

First-Class Mail International (240) Price Group 5
For the prices and maximum weights for letters, large envelopes (flats), packages (small packets), and postcards, see Notice 123, *Price List*.

Size Limits
Letters: See 241.212
Postcards: See 241.221
Large Envelopes (Flats): See 241.232
Packages (Small Packets): See 241.242 and 241.243

Airmail M-bags (260) — Direct Sack to One Addressee Price Group 5

Refer to Notice 123, *Price List*, for the applicable retail, commercial base, or commercial plus price.
Weight Limit: 66 lbs.

Matter for the Blind (270)
Free when sent as First-Class Mail International, including Priority Mail International Flat Rate Envelopes and Small Flat Rate Priced Boxes. Weight limit: 4 pounds.
Free when sent as Priority Mail International. Weight limit: 15 pounds.

Extra Services

Certificate of Mailing (313)

Individual Pieces	Fee
Individual article (PS Form 3817)	$1.15
Firm mailing books (PS Form 3877), per article listed (minimum 3)	0.44
Duplicate copy of PS Form 3817 or PS Form 3877 (per page)	1.15
Bulk Quantities	**Fee**
First 1,000 pieces (or fraction thereof)	$6.70
Each additional 1,000 pieces (or fraction thereof)	0.80
Duplicate copy of PS Form 3606	1.15

COD and Certified

NOT for International Mail

International Business Reply Service (382)

Fee: Envelopes up to 2 ounces $1.50; Cards $1.00

International Postal Money Order (371)

NOT Available

International Reply Coupons (381)

Fee: $2.20

Registered Mail (330)

Fee: $11.75

Maximum Indemnity: $47.33
Available for First-Class Mail International, including postcards and Flat Rate Envelopes and Small Flat Rate Priced Boxes, and matter for the blind or other physically handicapped persons. Not applicable to M-bags.

Restricted Delivery (350)

Fee: $4.55

Available for registered mail with a return receipt.
Endorsements: A remettre en main propre.
Equivalent in Dutch or German

Return Receipt (340)

Fee: $2.35

Available for registered mail and insured Priority Mail International parcels only.

Belize

Country Conditions for Mailing

Prohibitions (130)
Arms and ammunition.
Coins; platinum, gold, silver; precious stones; jewelry; and other valuable articles; coins; or bullion are permitted if clearly intended for purposes of ornament.
Saccharine and similar substances and articles containing them.
Tobacco packed with other merchandise; tobacco sweetened with leaves of other plants.

Restrictions
No list furnished.

Observations
None

Customs Forms Required (123)
First-Class Mail International items and Priority Mail International Flat Rate Envelopes and Small Flat Rate Priced Boxes:
PS Form 2976 (see 123.61)
Priority Mail International parcels:
PS Form 2976-A inside 2976-E (envelope)

Global Express Guaranteed (210) Price Group 8

Refer to Notice 123, *Price List*, for the applicable retail, commercial base, or commercial plus price.
Weight Limit: 70 lbs.

Insurance (212.5)

Insured Amount not over	Fee	Insured Amount not over	Fee
$100	No Fee	For document reconstruction insurance or non-document insurance coverage above $800, add $1.00 per $100 or fraction thereof, up to a maximum of $2,499 per shipment.	
200	$1.00		
300	2.00		
400	3.00		
500	4.00		
600	5.00		
700	6.00		
800	7.00	$2,499 max.	$24.00

Value Limit (212.1)
The maximum value of a GXG shipment to this country is $2,499 or a lesser amount if limited by content or value.

Size Limits (211.22)
The surface area of the address side of the item to be mailed must be large enough to completely contain the Global Express Guaranteed Air Waybill/Shipping Invoice (shipping label), postage, endorsement, and any applicable markings. The shipping label is approximately 5.5 inches high and 9.5 inches long.
Maximum length: 46 inches
Maximum width: 35 inches
Maximum height: 46 inches
Maximum length and girth combined: 108 inches

General Conditions for Mailing
See Publication 141, *Global Express Guaranteed Service Guide,* for information about areas served in the destination country, allowable contents, packaging and labeling requirements, tracking and tracing, service standards, and other conditions for mailing.

Express Mail International (220) Price Group 9

Refer to Notice 123, *Price List*, for the applicable retail, commercial base, or commercial plus price.
Weight Limit: 66 lbs.

Express Mail International — Flat Rate Envelope and Flat Rate Boxes
The maximum weight for the Express Mail International Flat Rate Envelope and the Express Mail International Flat Rate Boxes is 20 pounds. Refer to Notice 123, *Price List*, for the applicable retail, commercial base, or commercial plus price.

Insurance (222.8)
Available for **Express Mail International merchandise shipments** only

Insured Amount not over	Fee	Insured Amount not over	Fee
$100	No Fee	For insurance coverage above $2,000, add $1.50 for each $500 or fraction thereof, up to a maximum of $5,000 per shipment.	
200	$0.85		
500	2.35		
1,000	3.85		
1,500	5.35		
2,000	6.85	$5,000 max.	$15.85

Articles Admitted	Required Customs Form/Endorsement
Correspondence and business papers.	PS Form 2976, Customs — *CN 22 and Sender's Declaration*. Endorse item clearly next to mailing label as BUSINESS PAPERS.
Merchandise samples without commercial value.	PS Form 2976, Customs — *CN 22 and Sender's Declaration*.
Merchandise and all articles subject to customs duty.	PS Form 2976-A, *Customs Declaration and Dispatch Note CP 72,* inside a PS Form 2976-E, *Customs Declaration Envelope CP 91.*

Size Limits (221.52)
Maximum length: 36 inches
Maximum length and girth combined: 79 inches

Note:
Coins; banknotes; currency notes, including paper money; securities of any kind payable to bearer; traveler's checks; platinum, gold, and silver; precious stones; jewelry; watches; and other valuable articles are prohibited in Express Mail International shipments to Belize.

Reciprocal Service Name: EMS Belize
(**Note:** Service is available to Belize but not from it.)

Country Code: BZ

Areas Served:
Express Mail International is available ***only*** to the following locations:

Ambergris Caye
Belize City
Belmopan
Corozal
Dangriga
Orange Walk
Punta Gorda
San Ignacio
San Pedro

Priority Mail International (230) Price Group 9

Refer to Notice 123, *Price List*, for the applicable retail, commercial base, or commercial plus price.
Weight Limit: 44 lbs.

Note: *Ordinary Priority Mail International includes indemnity at no cost based on weight. (See 230.)*

Priority Mail International — Flat Rate

Flat Rate Envelopes or Small Flat Rate Priced Boxes: The maximum weight is 4 pounds. Refer to Notice 123, *Price List*, for the applicable retail, commercial base, or commercial plus price.

Flat Rate Boxes — Medium and Large: The maximum weight is 20 pounds, or the limit set by the individual country, whichever is less. Refer to Notice 123, *Price List*, for the retail, commercial base, or commercial plus price.

Insurance (232.92)

Available for **Priority Mail International merchandise parcels** only (see 323.72 for markings)

Insured Amount not over	**Fee**	**Insured Amount** not over	**Fee**
$50	$2.45		
100	3.60	Add $1.15 for each additional $100 or fraction of insurance coverage.	
200	4.75		
300	5.90		
400	7.05		
500	8.20	$1,600 max.	$20.85

Size Limits (231.22)

Maximum length: 42 inches
Maximum length and girth combined: 79 inches

First-Class Mail International (240) Price Group 9

For the prices and maximum weights for letters, large envelopes (flats), packages (small packets), and postcards, see Notice 123, *Price List*.

Size Limits

Letters: See 241.212
Postcards: See 241.221
Large Envelopes (Flats): See 241.232
Packages (Small Packets): See 241.242 and 241.243

Airmail M-bags (260) — Direct Sack to One Addressee Price Group 9

Refer to Notice 123, *Price List*, for the applicable retail, commercial base, or commercial plus price.
Weight Limit: 66 lbs.

Matter for the Blind (270)

Free when sent as First-Class Mail International, including Priority Mail International Flat Rate Envelopes and Small Flat Rate Priced Boxes. Weight limit: 4 pounds.
Free when sent as Priority Mail International. Weight limit: 15 pounds.

Extra Services

Certificate of Mailing (313)

Individual Pieces	**Fee**
Individual article (PS Form 3817)	$1.15
Firm mailing books (PS Form 3877), per article listed (minimum 3)	0.44
Duplicate copy of PS Form 3817 or PS Form 3877 (per page)	1.15
Bulk Quantities	**Fee**
First 1,000 pieces (or fraction thereof)	$6.70
Each additional 1,000 pieces (or fraction thereof)	0.80
Duplicate copy of PS Form 3606	1.15

COD and Certified **NOT** for International Mail

International Business Reply Service (382)

Fee: Envelopes up to 2 ounces $1.50; Cards $1.00

International Postal Money Order (371)

Use MO Form MP1
Maximum Amount Available: $700 **Fee:** $4.45
Money Order Inquiry: **Fee:** $5.50

International Reply Coupons (381) **Fee:** $2.20

Registered Mail (330) **Fee:** $11.75

Maximum Indemnity: $47.33
Available for First-Class Mail International, including postcards and Flat Rate Envelopes and Small Flat Rate Priced Boxes, and matter for the blind or other physically handicapped persons. Not applicable to M-bags.

Restricted Delivery (350) NOT Available

Return Receipt (340) **Fee:** $2.35

Available for registered mail and insured Priority Mail International parcels only.

Benin

Country Conditions for Mailing

Prohibitions (130)

Arms and ammunition.
Coins; banknotes; paper money; traveler's checks; gold, platinum, silver, (manufactured or not); precious stones; jewelry; and other valuable articles;
Gold and gold articles.
Gramophone records.
Medals and coins; machinery used for minting coins.
Mineral waters.
Perishable infectious biological substances.
Radioactive materials
Saccharine.
Uncut diamonds.

Restrictions

No list furnished.

Observations

1. First-Class Mail International items containing dutiable articles must be registered.
2. Postal authorities of Benin collect domestic postage from addressees for inbound shipments.
3. Parcel service is limited to the following offices:

Abomey	Cotonou	Ouidah
Abomey-Calavi	Cove	Parahoue
Adjohon	Dassa-Zoume	Parakou
Allada	Djougou	Pobe
Athieme	Grand-Popo	Porto-Novo
Attogon	Kandi	Sakete
Bimbereke	Natitingou	Savalou
Bohicon	Nikki	Save

Customs Forms Required (123)

First-Class Mail International items and Priority Mail International Flat Rate Envelopes and Small Flat Rate Priced Boxes:
PS Form 2976 (see 123.61)
Priority Mail International parcels:
PS Form 2976-A inside 2976-E (envelope)

Global Express Guaranteed (210) Price Group 4

Refer to Notice 123, *Price List*, for the applicable retail, commercial base, or commercial plus price.
Weight Limit: 70 lbs.

Insurance (212.5)

Insured Amount not over	Fee	Insured Amount not over	Fee
$100	No Fee	For document reconstruction insurance or non-document insurance coverage above $800, add $1.00 per $100 or fraction thereof, up to a maximum of $2,000 per shipment.	
200	$1.00		
300	2.00		
400	3.00		
500	4.00		
600	5.00		
700	6.00		
800	7.00	$2,000 max.	$19.00

Value Limit (212.1)

The maximum value of a GXG shipment to Benin is $2,000 or a lesser amount if limited by content or value.

Size Limits (211.22)

The surface area of the address side of the item to be mailed must be large enough to completely contain the Global Express Guaranteed Air Waybill/Shipping Invoice (shipping label), postage, endorsement, and any applicable markings. The shipping label is approximately 5.5 inches high and 9.5 inches long.
Maximum length: 46 inches
Maximum width: 35 inches
Maximum height: 46 inches
Maximum length and girth combined: 108 inches

General Conditions for Mailing

See Publication 141, *Global Express Guaranteed Service Guide,* for information about areas served in the destination country, allowable contents, packaging and labeling requirements, tracking and tracing, service standards, and other conditions for mailing.

Express Mail International (220) Price Group 7

Refer to Notice 123, *Price List*, for the applicable retail, commercial base, or commercial plus price.
Weight Limit: 66 lbs.

Express Mail International — Flat Rate Envelope and Flat Rate Boxes

The maximum weight for the Express Mail International Flat Rate Envelope and the Express Mail International Flat Rate Boxes is 20 pounds. Refer to Notice 123, *Price List*, for the applicable retail, commercial base, or commercial plus price.

Insurance (222.8)

Available for **Express Mail International merchandise shipments** only

Insured Amount not over	Fee	Insured Amount not over	Fee
$100	No Fee	For insurance coverage above $2,000, add $1.50 for each $500 or fraction thereof, up to a maximum of $5,000 per shipment.	
200	$0.85		
500	2.35		
1,000	3.85		
1,500	5.35		
2,000	6.85	$5,000 max.	$15.85

Articles Admitted	Required Customs Form/Endorsement
Correspondence and business papers.	PS Form 2976, Customs — *CN 22 and Sender's Declaration*. Endorse item clearly next to mailing label as BUSINESS PAPERS.
Merchandise samples without commercial value.	PS Form 2976, Customs — *CN 22 and Sender's Declaration*.
Merchandise and all articles subject to customs duty.	PS Form 2976-A, *Customs Declaration and Dispatch Note CP 72,* inside a PS Form 2976-E, *Customs Declaration Envelope CP 91.*

Size Limits (221.52)

Maximum length: 36 inches
Maximum length and girth combined: 79 inches

Note:
Coins; banknotes; currency notes, including paper money; securities of any kind payable to bearer; traveler's checks; platinum, gold, and silver; precious stones; jewelry; watches; and other valuable articles are prohibited in Express Mail International shipments to Benin.

Reciprocal Service Name: Postexpres Benin - EMS

Country Code: BJ

Areas Served:
Express Mail International is available ***only*** to the following locations:
Bohicon
Cotonou
Natitingou
Parakou
Porto-Novo

Priority Mail International (230) Price Group 7

Refer to Notice 123, *Price List*, for the applicable retail, commercial base, or commercial plus price.
Weight Limit: 66 lbs.

Note: *Ordinary Priority Mail International includes indemnity at no cost based on weight. (See 230.)*

Priority Mail International — Flat Rate
Flat Rate Envelopes or Small Flat Rate Priced Boxes: The maximum weight is 4 pounds. Refer to Notice 123, *Price List*, for the applicable retail, commercial base, or commercial plus price.

Flat Rate Boxes — Medium and Large: The maximum weight is 20 pounds, or the limit set by the individual country, whichever is less. Refer to Notice 123, *Price List*, for the retail, commercial base, or commercial plus price.

Insurance (232.92) NOT Available

Size Limits (231.22)
Maximum length: 42 inches
Maximum length and girth combined: 79 inches

First-Class Mail International (240) Price Group 7
For the prices and maximum weights for letters, large envelopes (flats), packages (small packets), and postcards, see Notice 123, *Price List*.

Size Limits
Letters: See 241.212
Postcards: See 241.221
Large Envelopes (Flats): See 241.232
Packages (Small Packets): See 241.242 and 241.243

Airmail M-bags (260) — Direct Sack to One Addressee Price Group 7

Refer to Notice 123, *Price List*, for the applicable retail, commercial base, or commercial plus price.
Weight Limit: 66 lbs.

Matter for the Blind (270) NOT Available

Extra Services

Certificate of Mailing (313)

Individual Pieces	Fee
Individual article (PS Form 3817)	$1.15
Firm mailing books (PS Form 3877), per article listed (minimum 3)	0.44
Duplicate copy of PS Form 3817 or PS Form 3877 (per page)	1.15
Bulk Quantities	**Fee**
First 1,000 pieces (or fraction thereof)	$6.70
Each additional 1,000 pieces (or fraction thereof)	0.80
Duplicate copy of PS Form 3606	1.15

COD and Certified **NOT** for International Mail

International Business Reply Service (382)
Fee: Envelopes up to 2 ounces $1.50; Cards $1.00

International Postal Money Order (371)
NOT Available

International Reply Coupons (381) **Fee:** $2.20

Registered Mail (330) **Fee:** $11.75
Maximum Indemnity: $47.33
Available for First-Class Mail International, including postcards and Flat Rate Envelopes and Small Flat Rate Priced Boxes, and matter for the blind or other physically handicapped persons. Not applicable to M-bags.

Restricted Delivery (350) **Fee:** $4.55
Available for registered mail with a return receipt.
Endorsements: A remettre en main propre.

Return Receipt (340) **Fee:** $2.35
Available for registered mail only.

Bermuda

Country Conditions for Mailing

Prohibitions (130)
Perishable infectious biological substances.
Perishable noninfectious biological substances.
Radioactive materials.

Restrictions
No list furnished.

Observations
None

Customs Forms Required (123)
First-Class Mail International items and Priority Mail International Flat Rate Envelopes and Small Flat Rate Priced Boxes:
PS Form 2976 (see 123.61)
Priority Mail International parcels:
PS Form 2976-A inside 2976-E (envelope)

Global Express Guaranteed (210) Price Group 7

Refer to Notice 123, *Price List*, for the applicable retail, commercial base, or commercial plus price.
Weight Limit: 70 lbs.

Insurance (212.5)

Insured Amount not over	Fee	Insured Amount not over	Fee
$100	No Fee	For document reconstruction insurance or non-document insurance coverage above $800, add $1.00 per $100 or fraction thereof, up to a maximum of $2,499 per shipment.	
200	$1.00		
300	2.00		
400	3.00		
500	4.00		
600	5.00		
700	6.00		
800	7.00	$2,499 max.	$24.00

Value Limit (212.1)
The maximum value of a GXG shipment to this country is $2,499 or a lesser amount if limited by content or value.

Size Limits (211.22)
The surface area of the address side of the item to be mailed must be large enough to completely contain the Global Express Guaranteed Air Waybill/Shipping Invoice (shipping label), postage, endorsement, and any applicable markings. The shipping label is approximately 5.5 inches high and 9.5 inches long.
Maximum length: 46 inches
Maximum width: 35 inches
Maximum height: 46 inches
Maximum length and girth combined: 108 inches

General Conditions for Mailing
See Publication 141, *Global Express Guaranteed Service Guide,* for information about areas served in the destination country, allowable contents, packaging and labeling requirements, tracking and tracing, service standards, and other conditions for mailing.

Express Mail International (220) Price Group 9

Refer to Notice 123, *Price List*, for the applicable retail, commercial base, or commercial plus price.
Weight Limit: 44 lbs.

Express Mail International — Flat Rate Envelope and Flat Rate Boxes
The maximum weight for the Express Mail International Flat Rate Envelope and the Express Mail International Flat Rate Boxes is 20 pounds. Refer to Notice 123, *Price List*, for the applicable retail, commercial base, or commercial plus price.

Insurance (222.8)
Available for **Express Mail International merchandise shipments** only

Insured Amount not over	Fee	Insured Amount not over	Fee
$100	No Fee	For insurance coverage above $2,000, add $1.50 for each $500 or fraction thereof, up to a maximum of $5,000 per shipment.	
200	$0.85		
500	2.35		
1,000	3.85		
1,500	5.35		
2,000	6.85	$5,000 max.	$15.85

Articles Admitted	Required Customs Form/Endorsement
Business correspondence and commerical papers and documents.	No form required. Endorse item clearly next to mailing label as BUSINESS PAPERS.
Merchandise samples without commercial value.	PS Form 2976, Customs — *CN 22 and Sender's Declaration*.
Merchandise and all articles subject to customs duty.	PS Form 2976-A, *Customs Declaration and Dispatch Note CP 72,* inside a PS Form 2976-E, *Customs Declaration Envelope CP 91.*

Size Limits (221.52)
Maximum length: 36 inches
Maximum length and girth combined: 79 inches

Note:
Coins; banknotes; currency notes, including paper money; securities of any kind payable to bearer; traveler's checks; platinum, gold, and silver; precious stones; jewelry; watches; and other valuable articles are prohibited in Express Mail International shipments to Bermuda.

Reciprocal Service Name: International Data Express

Country Code: BM

Areas Served: All

Priority Mail International (230) Price Group 9

Refer to Notice 123, *Price List*, for the applicable retail, commercial base, or commercial plus price.
Weight Limit: 44 lbs.

Note: *Ordinary Priority Mail International includes indemnity at no cost based on weight. (See 230.)*

Priority Mail International — Flat Rate

Flat Rate Envelopes or Small Flat Rate Priced Boxes: The maximum weight is 4 pounds. Refer to Notice 123, *Price List*, for the applicable retail, commercial base, or commercial plus price.

Flat Rate Boxes — Medium and Large: The maximum weight is 20 pounds, or the limit set by the individual country, whichever is less. Refer to Notice 123, *Price List*, for the retail, commercial base, or commercial plus price.

Insurance (232.92)

Available for **Priority Mail International merchandise parcels** only (see 323.72 for markings)

Insured Amount not over	Fee
$50	$2.45
100	3.60
200	4.75
300	5.90
400	7.05
440 max.	8.20

Size Limits (231.22)

Maximum length: 42 inches
Maximum length and girth combined: 79 inches

First-Class Mail International (240) Price Group 9

For the prices and maximum weights for letters, large envelopes (flats), packages (small packets), and postcards, see Notice 123, *Price List*.

Size Limits

Letters: See 241.212
Postcards: See 241.221
Large Envelopes (Flats): See 241.232
Packages (Small Packets): See 241.242 and 241.243

Airmail M-bags (260) — Direct Sack to One Addressee Price Group 9

Refer to Notice 123, *Price List*, for the applicable retail, commercial base, or commercial plus price.
Weight Limit: 66 lbs.

Matter for the Blind (270)

Free when sent as First-Class Mail International, including Priority Mail International Flat Rate Envelopes and Small Flat Rate Priced Boxes. Weight limit: 4 pounds.
Free when sent as Priority Mail International. Weight limit: 15 pounds.

Extra Services

Certificate of Mailing (313)

Individual Pieces	Fee
Individual article (PS Form 3817)	$1.15
Firm mailing books (PS Form 3877), per article listed (minimum 3)	0.44
Duplicate copy of PS Form 3817 or PS Form 3877 (per page)	1.15
Bulk Quantities	**Fee**
First 1,000 pieces (or fraction thereof)	$6.70
Each additional 1,000 pieces (or fraction thereof)	0.80
Duplicate copy of PS Form 3606	1.15

COD and Certified **NOT** for International Mail

International Business Reply Service (382)

Fee: Envelopes up to 2 ounces $1.50; Cards $1.00

International Postal Money Order (371)

NOT Available

International Reply Coupons (381) **Fee:** $2.20

Registered Mail (330) **Fee:** $11.75

Maximum Indemnity: $47.33
Available for First-Class Mail International, including postcards and Flat Rate Envelopes and Small Flat Rate Priced Boxes, and matter for the blind or other physically handicapped persons. Not applicable to M-bags.

Restricted Delivery (350) NOT Available

Return Receipt (340) **Fee:** $2.35

Available for registered mail and insured Priority Mail International parcels only.

Bhutan

Country Conditions for Mailing

Prohibitions (130)
Perishable infectious biological substances.
Radioactive materials.

Restrictions
No list furnished.

Observations
None

Customs Forms Required (123)
First-Class Mail International items and Priority Mail International Flat Rate Envelopes and Small Flat Rate Priced Boxes:
PS Form 2976 (see 123.61)
Priority Mail International parcels:
PS Form 2976-A inside 2976-E (envelope)

Global Express Guaranteed (210) Price Group 6

Refer to Notice 123, *Price List*, for the applicable retail, commercial base, or commercial plus price.
Weight Limit: 70 lbs.

Insurance (212.5)

Insured Amount not over	Fee	Insured Amount not over	Fee
$100	No Fee	For document reconstruction insurance or non-document insurance coverage above $800, add $1.00 per $100 or fraction thereof, up to a maximum of $2,499 per shipment.	
200	$1.00		
300	2.00		
400	3.00		
500	4.00		
600	5.00		
700	6.00		
800	7.00	$2,499 max.	$24.00

Value Limit (212.1)
The maximum value of a GXG shipment to this country is $2,499 or a lesser amount if limited by content or value.

Size Limits (211.22)
The surface area of the address side of the item to be mailed must be large enough to completely contain the Global Express Guaranteed Air Waybill/Shipping Invoice (shipping label), postage, endorsement, and any applicable markings. The shipping label is approximately 5.5 inches high and 9.5 inches long.
Maximum length: 46 inches
Maximum width: 35 inches
Maximum height: 46 inches
Maximum length and girth combined: 108 inches

General Conditions for Mailing
See Publication 141, *Global Express Guaranteed Service Guide,* for information about areas served in the destination country, allowable contents, packaging and labeling requirements, tracking and tracing, service standards, and other conditions for mailing.

Express Mail International (220) Price Group 6

Refer to Notice 123, *Price List*, for the applicable retail, commercial base, or commercial plus price.
Weight Limit: 66 lbs.

Express Mail International — Flat Rate Envelope and Flat Rate Boxes
The maximum weight for the Express Mail International Flat Rate Envelope and the Express Mail International Flat Rate Boxes is 20 pounds. Refer to Notice 123, *Price List*, for the applicable retail, commercial base, or commercial plus price.

Insurance (222.8)
Available for **Express Mail International merchandise shipments** only

Insured Amount not over	Fee	Insured Amount not over	Fee
$100	No Fee	For insurance coverage above $2,000, add $1.50 for each $500 or fraction thereof, up to a maximum of $5,000 per shipment.	
200	$0.85		
500	2.35		
1,000	3.85		
1,500	5.35		
2,000	6.85	$5,000 max.	$15.85

Articles Admitted	Required Customs Form/Endorsement
Correspondence and business papers.	PS Form 2976, Customs — *CN 22 and Sender's Declaration*. Endorse item clearly next to mailing label as BUSINESS PAPERS.
Merchandise samples without commercial value.	PS Form 2976, Customs — *CN 22 and Sender's Declaration*.
Merchandise and all articles subject to customs duty.	PS Form 2976-A, *Customs Declaration and Dispatch Note CP 72,* inside a PS Form 2976-E, *Customs Declaration Envelope CP 91.*

Size Limits (221.52)
Maximum length: 36 inches
Maximum length and girth combined: 79 inches

Note:
Coins; banknotes; currency notes, including paper money; securities of any kind payable to bearer; traveler's checks; platinum, gold, and silver; precious stones; jewelry; watches; and other valuable articles are prohibited in Express Mail International shipments to Bhutan.

Reciprocal Service Name: Express Mail Service

Country Code: BT

Areas Served:
Express Mail International is available ***only*** to the following locations:
Gelephu
Jongkhar
Phuntsholing
Samdrup
Thimphu

Priority Mail International (230) Price Group 6

Refer to Notice 123, *Price List*, for the applicable retail, commercial base, or commercial plus price.
Weight Limit: 66 lbs.

Note: *Ordinary Priority Mail International includes indemnity at no cost based on weight. (See 230.)*

Priority Mail International — Flat Rate

Flat Rate Envelopes or Small Flat Rate Priced Boxes: The maximum weight is 4 pounds. Refer to Notice 123, *Price List*, for the applicable retail, commercial base, or commercial plus price.

Flat Rate Boxes — Medium and Large: The maximum weight is 20 pounds, or the limit set by the individual country, whichever is less. Refer to Notice 123, *Price List*, for the retail, commercial base, or commercial plus price.

Insurance (232.92)

Available for **Priority Mail International merchandise parcels** only (see 323.72 for markings)

Insured Amount not over	Fee
$22 max.	$2.45

Size Limits (231.22)

Maximum length: 42 inches
Maximum length and girth combined: 79 inches

First-Class Mail International (240) Price Group 6

For the prices and maximum weights for letters, large envelopes (flats), packages (small packets), and postcards, see Notice 123, *Price List*.

Size Limits

Letters: See 241.212
Postcards: See 241.221
Large Envelopes (Flats): See 241.232
Packages (Small Packets): See 241.242 and 241.243

Airmail M-bags (260) — Direct Sack to One Addressee Price Group 6

Refer to Notice 123, *Price List*, for the applicable retail, commercial base, or commercial plus price.
Weight Limit: 66 lbs.

Matter for the Blind (270)

Free when sent as First-Class Mail International, including Priority Mail International Flat Rate Envelopes and Small Flat Rate Priced Boxes. Weight limit: 4 pounds.
Free when sent as Priority Mail International. Weight limit: 15 pounds.

Extra Services

Certificate of Mailing (313)

Individual Pieces	Fee
Individual article (PS Form 3817)	$1.15
Firm mailing books (PS Form 3877), per article listed (minimum 3)	0.44
Duplicate copy of PS Form 3817 or PS Form 3877 (per page)	1.15
Bulk Quantities	**Fee**
First 1,000 pieces (or fraction thereof)	$6.70
Each additional 1,000 pieces (or fraction thereof)	0.80
Duplicate copy of PS Form 3606	1.15

COD and Certified **NOT** for International Mail

International Business Reply Service (382)

Fee: Envelopes up to 2 ounces $1.50; Cards $1.00

International Postal Money Order (371)

NOT Available

International Reply Coupons (381) **Fee:** $2.20

Registered Mail (330) **Fee:** $11.75

Maximum Indemnity: $47.33
Available for First-Class Mail International, including postcards and Flat Rate Envelopes and Small Flat Rate Priced Boxes, and matter for the blind or other physically handicapped persons. Not applicable to M-bags.

Restricted Delivery (350) **Fee:** $4.55

Available for registered mail with a return receipt.
Endorsements: A remettre en main propre.
Acknowledgement due.

Return Receipt (340) **Fee:** $2.35

Available for registered mail and insured Priority Mail International parcels only.

Bolivia

Country Conditions for Mailing

Priority Mail International parcel service is suspended due to lack of available air transportation. This suspension of service does *not* affect the Priority Mail International Flat Rate Envelope or Small Flat Rate Priced Boxes or other international mail categories currently available.

Prohibitions (130)

Arms and ammunition.
Articles that violate the Bolivian trademark laws.
Books, pamphlets or other printed matter, paintings and illustrations, figures and objects of an obscene or immoral nature.
Coins; banknotes; paper money; traveler's checks; gold, platinum, silver, manufactured or not; precious stones; jewelry; and other valuable articles.
Counterfeit or illegal currency; advertisements imitating currency or postage stamps, except for philatelic or numismatic catalogs.
Gambling devices.
Perishable infectious biological substances.
Perishable noninfectious biological substances.
Pocket lighters.
Radioactive materials.
Tobacco in any form, cigarettes or cigarette papers or packaging.

Restrictions

Pharmaceutical and medicinal products must be approved by the Bolivian health authorities. Senders should ascertain from the addressees in advance of mailing whether the medicine they desire to send will be admitted.
Used clothing must be accompanied by a certificate of disinfection issued by a competent authority (for example: Local Board of Health), or must be by a firm with facilities for disinfecting the articles involved. Senders must endorse the wrapper of shipments containing used clothing to show that a certificate of disinfection is enclosed.

Observations

1. A commercial invoice signed by a Bolivian consulate is required for shipments exceeding U.S. $100 in value. The invoice must be in the form prescribed by the Bolivian consular regulations. If senders are not familiar with the requirements, they should be advised to consult one of the Bolivian consulates located in principal cities of the United States. Information may also be obtained from the American Republics Division, Bureau of International Commerce, Department of Commerce, Washington, D.C. 20230, or any field office of the Department. No invoices are required for shipments of lesser value.
2. Import permit is required when the value of a shipment exceeds U.S. $500.

Customs Forms Required (123)

First-Class Mail International items and Priority Mail International Flat Rate Envelopes and Small Flat Rate Priced Boxes:
PS Form 2976 (see 123.61)

Global Express Guaranteed (210) Price Group 8

Refer to Notice 123, *Price List*, for the applicable retail, commercial base, or commercial plus price.
Weight Limit: 70 lbs.

Insurance (212.5)

Insured Amount not over	Fee	Insured Amount not over	Fee
$100	No Fee	For document reconstruction insurance or non-document insurance coverage above $800, add $1.00 per $100 or fraction thereof, up to a maximum of $2,499 per shipment.	
200	$1.00		
300	2.00		
400	3.00		
500	4.00		
600	5.00		
700	6.00		
800	7.00	$2,499 max.	$24.00

Value Limit (212.1)

The maximum value of a GXG shipment to this country is $2,499 or a lesser amount if limited by content or value.

Size Limits (211.22)

The surface area of the address side of the item to be mailed must be large enough to completely contain the Global Express Guaranteed Air Waybill/Shipping Invoice (shipping label), postage, endorsement, and any applicable markings. The shipping label is approximately 5.5 inches high and 9.5 inches long.
Maximum length: 46 inches
Maximum width: 35 inches
Maximum height: 46 inches
Maximum length and girth combined: 108 inches

General Conditions for Mailing

See Publication 141, *Global Express Guaranteed Service Guide,* for information about areas served in the destination country, allowable contents, packaging and labeling requirements, tracking and tracing, service standards, and other conditions for mailing.

Express Mail International (220) Price Group 9

Refer to Notice 123, *Price List*, for the applicable retail, commercial base, or commercial plus price.
Weight Limit: 66 lbs.

Express Mail International — Flat Rate Envelope and Flat Rate Boxes

The maximum weight for the Express Mail International Flat Rate Envelope and the Express Mail International Flat Rate Boxes is 20 pounds. Refer to Notice 123, *Price List*, for the applicable retail, commercial base, or commercial plus price.

Insurance (222.8)

Available for **Express Mail International merchandise shipments** only

Insured Amount not over	Fee	Insured Amount not over	Fee
$100	No Fee	For insurance coverage above $2,000, add $1.50 for each $500 or fraction thereof, up to a maximum of $5,000 per shipment.	
200	$0.85		
500	2.35		
1,000	3.85		
1,500	5.35		
2,000	6.85	$5,000 max.	$15.85

Articles Admitted	Required Customs Form/Endorsement
Correspondence and business papers.	PS Form 2976, Customs — *CN 22 and Sender's Declaration*. Endorse item clearly next to mailing label as BUSINESS PAPERS.
Merchandise samples without commercial value.	PS Form 2976, Customs — *CN 22 and Sender's Declaration*.
Merchandise and all articles subject to customs duty.	PS Form 2976-A, *Customs Declaration and Dispatch Note CP 72,* inside a PS Form 2976-E, *Customs Declaration Envelope CP 91.* Enclose a commercial invoice in each item.

Size Limits (221.52)
Maximum length: 36 inches
Maximum length and girth combined: 79 inches

Note:
Coins; banknotes; currency notes, including paper money; securities of any kind payable to bearer; traveler's checks; platinum, gold, and silver; precious stones; jewelry; watches; and other valuable articles are prohibited in Express Mail International shipments to Bolivia.

Reciprocal Service Name: Express Mail Service

Country Code: BO

Areas Served: All

Priority Mail International (230) Price Group 9

Available only for Priority Mail International Flat Rate Envelope and Small Flat Rate Priced Boxes.

Flat Rate Envelopes or Small Flat Rate Priced Boxes: The maximum weight is 4 pounds. Refer to Notice 123, *Price List*, for the applicable retail, commercial base, or commercial plus price.

Insurance (232.92) NOT Available

First-Class Mail International (240) Price Group 9
For the prices and maximum weights for letters, large envelopes (flats), packages (small packets), and postcards, see Notice 123, *Price List*.

Size Limits
Letters: See 241.212
Postcards: See 241.221
Large Envelopes (Flats): See 241.232
Packages (Small Packets): See 241.242 and 241.243

Airmail M-bags (260) — Direct Sack to One Addressee Price Group 9

Refer to Notice 123, *Price List*, for the applicable retail, commercial base, or commercial plus price.
Weight Limit: 66 lbs.

Matter for the Blind (270)
Free when sent as First-Class Mail International, including Priority Mail International Flat Rate Envelopes and Small Flat Rate Priced Boxes. Weight limit: 4 pounds.
Free when sent as Priority Mail International. Weight limit: 15 pounds.

Extra Services

Certificate of Mailing (313)

Individual Pieces	Fee
Individual article (PS Form 3817)	$1.15
Firm mailing books (PS Form 3877), per article listed (minimum 3)	0.44
Duplicate copy of PS Form 3817 or PS Form 3877 (per page)	1.15
Bulk Quantities	**Fee**
First 1,000 pieces (or fraction thereof)	$6.70
Each additional 1,000 pieces (or fraction thereof)	0.80
Duplicate copy of PS Form 3606	1.15

COD and Certified **NOT** for International Mail

International Business Reply Service (382)
Fee: Envelopes up to 2 ounces $1.50; Cards $1.00

International Postal Money Order (371)
Use MO Form MP1
Maximum Amount Available: $700 **Fee:** $4.45
Money Order Inquiry: **Fee:** $5.50

International Reply Coupons (381) **Fee:** $2.20

Registered Mail (330) **Fee:** $11.75
Maximum Indemnity: $47.33
Available for First-Class Mail International, including postcards and Flat Rate Envelopes and Small Flat Rate Priced Boxes, and matter for the blind or other physically handicapped persons. Not applicable to M-bags.

Restricted Delivery (350) NOT Available

Return Receipt (340) **Fee:** $2.35
Available for registered mail only.

Bosnia-Herzegovina

Country Conditions for Mailing

Prohibitions (130)

The government of Bosnia-Herzegovina has instituted a temporary prohibition against mailing meats and meat products and milk and dairy products to Bosnia-Herzegovina.

Restrictions

No list furnished.

Observations

No list furnished.

Customs Forms Required (123)

First-Class Mail International items and Priority Mail International Flat Rate Envelopes and Small Flat Rate Priced Boxes:
PS Form 2976 (see 123.61)
Priority Mail International parcels:
PS Form 2976-A inside 2976-E (envelope)

Global Express Guaranteed (210) Price Group 4

Refer to Notice 123, *Price List*, for the applicable retail, commercial base, or commercial plus price.
Weight Limit: 70 lbs.

Insurance (212.5)

Insured Amount not over	Fee	Insured Amount not over	Fee
$100	No Fee	For document reconstruction insurance or non-document insurance coverage above $800, add $1.00 per $100 or fraction thereof, up to a maximum of $2,499 per shipment.	
200	$1.00		
300	2.00		
400	3.00		
500	4.00		
600	5.00		
700	6.00		
800	7.00	$2,499 max.	$24.00

Value Limit (212.1)

The maximum value of a GXG shipment to this country is $2,499 or a lesser amount if limited by content or value.

Size Limits (211.22)

The surface area of the address side of the item to be mailed must be large enough to completely contain the Global Express Guaranteed Air Waybill/Shipping Invoice (shipping label), postage, endorsement, and any applicable markings. The shipping label is approximately 5.5 inches high and 9.5 inches long.
Maximum length: 46 inches
Maximum width: 35 inches
Maximum height: 46 inches
Maximum length and girth combined: 108 inches

General Conditions for Mailing

See Publication 141, *Global Express Guaranteed Service Guide,* for information about areas served in the destination country, allowable contents, packaging and labeling requirements, tracking and tracing, service standards, and other conditions for mailing.

Express Mail International (220) Price Group 4

Refer to Notice 123, *Price List*, for the applicable retail, commercial base, or commercial plus price.
Weight Limit: 66 lbs.

Express Mail International — Flat Rate Envelope and Flat Rate Boxes

The maximum weight for the Express Mail International Flat Rate Envelope and the Express Mail International Flat Rate Boxes is 20 pounds. Refer to Notice 123, *Price List*, for the applicable retail, commercial base, or commercial plus price.

Insurance (222.8)

Available for **Express Mail International merchandise shipments** only

Insured Amount not over	Fee	Insured Amount not over	Fee
$100	No Fee	For insurance coverage above $2,000, add $1.50 for each $500 or fraction thereof, up to a maximum of $5,000 per shipment.	
200	$0.85		
500	2.35		
1,000	3.85		
1,500	5.35		
2,000	6.85	$5,000 max.	$15.85

Articles Admitted	Required Customs Form/Endorsement
Correspondence, business papers, computer data, and advertising material.	PS Form 2976, Customs — *CN 22 and Sender's Declaration*. Endorse item clearly next to mailing label as BUSINESS PAPERS.
Merchandise samples without commercial value.	PS Form 2976, Customs — *CN 22 and Sender's Declaration*.
Merchandise and all articles subject to customs duty.	PS Form 2976-A, *Customs Declaration and Dispatch Note CP 72,* inside a PS Form 2976-E, *Customs Declaration Envelope CP 91.* Enclose a commercial invoice in each item.

Size Limits (221.52)

Maximum length: 36 inches
Maximum length and girth combined: 79 inches

Note:

Coins; banknotes; currency notes, including paper money; securities of any kind payable to bearer; traveler's checks; platinum, gold, and silver; precious stones; jewelry; watches; and other valuable articles are prohibited in Express Mail International shipments to Bosnia-Herzegovina.

Reciprocal Service Name: Courrier EMS

Country Code: BA

Areas Served:

City	Postal Code
Banja Luka	78000
Bihac	77000
Brcko	76000
Doboj	74000
Gorazde	73000
Mostar	88000
Prijedor	79000
Sarajevo	71000
Tuzla	75000
Zenica	72000

Priority Mail International (230) Price Group 4

Refer to Notice 123, *Price List*, for the applicable retail, commercial base, or commercial plus price.
Weight Limit: 44 lbs.

Note: *Ordinary Priority Mail International includes indemnity at no cost based on weight. (See 230.)*

Priority Mail International — Flat Rate

Flat Rate Envelopes or Small Flat Rate Priced Boxes: The maximum weight is 4 pounds. Refer to Notice 123, *Price List*, for the applicable retail, commercial base, or commercial plus price.

Flat Rate Boxes — Medium and Large: The maximum weight is 20 pounds, or the limit set by the individual country, whichever is less. Refer to Notice 123, *Price List*, for the retail, commercial base, or commercial plus price.

Insurance (232.92)

Available for **Priority Mail International merchandise parcels** only (see 323.72 for markings)

Insured Amount not over	Fee	Insured Amount not over	Fee
$50	$2.45		
100	3.60	Add $1.15 for each additional $100 or fraction of insurance coverage.	
200	4.75		
300	5.90		
400	7.05		
500	8.20	$5,000 max.	$59.95

Size Limits (231.22)

Maximum length: 42 inches
Maximum length and girth combined: 79 inches

First-Class Mail International (240) Price Group 4

For the prices and maximum weights for letters, large envelopes (flats), packages (small packets), and postcards, see Notice 123, *Price List*.

Size Limits

Letters: See 241.212
Postcards: See 241.221
Large Envelopes (Flats): See 241.232
Packages (Small Packets): See 241.242 and 241.243

Airmail M-bags (260) — Direct Sack to One Addressee Price Group 4

Refer to Notice 123, *Price List*, for the applicable retail, commercial base, or commercial plus price.
Weight Limit: 66 lbs.

Matter for the Blind (270)

Free when sent as First-Class Mail International, including Priority Mail International Flat Rate Envelopes and Small Flat Rate Priced Boxes. Weight limit: 4 pounds.
Free when sent as Priority Mail International. Weight limit: 15 pounds.

Extra Services

Certificate of Mailing (313)

Individual Pieces	Fee
Individual article (PS Form 3817)	$1.15
Firm mailing books (PS Form 3877), per article listed (minimum 3)	0.44
Duplicate copy of PS Form 3817 or PS Form 3877 (per page)	1.15
Bulk Quantities	**Fee**
First 1,000 pieces (or fraction thereof)	$6.70
Each additional 1,000 pieces (or fraction thereof)	0.80
Duplicate copy of PS Form 3606	1.15

COD and Certified

NOT for International Mail

International Business Reply Service (382)

Fee: Envelopes up to 2 ounces $1.50; Cards $1.00

International Postal Money Order (371)

NOT Available

International Reply Coupons (381)

Fee: $2.20

Registered Mail (330)

Fee: $11.75

Maximum Indemnity: $47.33
Available for First-Class Mail International, including postcards and Flat Rate Envelopes and Small Flat Rate Priced Boxes, and matter for the blind or other physically handicapped persons. Not applicable to M-bags.

Restricted Delivery (350)

NOT Available

Return Receipt (340)

Fee: $2.35

Available for registered mail and insured Priority Mail International parcels only.

Botswana

Country Conditions for Mailing

Prohibitions (130)

Butane gas cigarette lighters.

Coins; bank notes; currency notes (paper money); securities of any kind payable to bearer; traveler's checks; platinum, gold, and silver (manufactured or not); precious stones; jewelry; and other valuable articles are prohibited in all classes of mail, including Express Mail International shipments, that are mailed to Botswana.

Honey and preparations of honey including royal jelly, preserves sweetened with honey, and flypaper.

Prison-made goods.

Used clothing for sale; used boots and shoes.

Restrictions

None

Observations

1. Import licenses are required for many kinds of goods and senders should ascertain from the addressee before mailing that the necessary documents are held.
2. Import licenses are not required for bona fide gift shipments not exceeding 11 pounds.

Customs Forms Required (123)

First-Class Mail International items and Priority Mail International Flat Rate Envelopes and Small Flat Rate Priced Boxes:
PS Form 2976 (see 123.61)

Priority Mail International parcels:
PS Form 2976-A inside 2976-E (envelope)

Global Express Guaranteed (210) Price Group 4

Refer to Notice 123, *Price List*, for the applicable retail, commercial base, or commercial plus price.
Weight Limit: 70 lbs.

Insurance (212.5)

Insured Amount not over	Fee	Insured Amount not over	Fee
$100	No Fee	For document reconstruction insurance or non-document insurance coverage above $800, add $1.00 per $100 or fraction thereof, up to a maximum of $2,499 per shipment.	
200	$1.00		
300	2.00		
400	3.00		
500	4.00		
600	5.00		
700	6.00		
800	7.00	$2,499 max.	$24.00

Value Limit (212.1)

The maximum value of a GXG shipment to this country is $2,499 or a lesser amount if limited by content or value.

Size Limits (211.22)

The surface area of the address side of the item to be mailed must be large enough to completely contain the Global Express Guaranteed Air Waybill/Shipping Invoice (shipping label), postage, endorsement, and any applicable markings. The shipping label is approximately 5.5 inches high and 9.5 inches long.

Maximum length: 46 inches
Maximum width: 35 inches
Maximum height: 46 inches
Maximum length and girth combined: 108 inches

General Conditions for Mailing

See Publication 141, *Global Express Guaranteed Service Guide,* for information about areas served in the destination country, allowable contents, packaging and labeling requirements, tracking and tracing, service standards, and other conditions for mailing.

Express Mail International (220) Price Group 7

Refer to Notice 123, *Price List*, for the applicable retail, commercial base, or commercial plus price.
Weight Limit: 66 lbs.

Express Mail International — Flat Rate Envelope and Flat Rate Boxes

The maximum weight for the Express Mail International Flat Rate Envelope and the Express Mail International Flat Rate Boxes is 20 pounds. Refer to Notice 123, *Price List*, for the applicable retail, commercial base, or commercial plus price.

Insurance (222.8)

Available for **Express Mail International merchandise shipments** only

Insured Amount not over	Fee	Insured Amount not over	Fee
$100	No Fee	For insurance coverage above $2,000, add $1.50 for each $500 or fraction thereof, up to a maximum of $5,000 per shipment.	
200	$0.85		
500	2.35		
1,000	3.85		
1,500	5.35		
2,000	6.85	$5,000 max.	$15.85

Articles Admitted	Required Customs Form/Endorsement
Correspondence and business papers.	PS Form 2976, Customs — *CN 22 and Sender's Declaration*. Endorse item clearly next to mailing label as BUSINESS PAPERS.
Merchandise samples without commercial value.	PS Form 2976, Customs — *CN 22 and Sender's Declaration*.
Merchandise and all articles subject to customs duty.	PS Form 2976-A, *Customs Declaration and Dispatch Note CP 72,* inside a PS Form 2976-E, *Customs Declaration Envelope CP 91.* Include an invoice with all commercial shipments.

Size Limits (221.52)

Maximum length: 36 inches
Maximum length and girth combined: 79 inches

Note:

Coins; banknotes; currency notes, including paper money; securities of any kind payable to bearer; traveler's checks; platinum, gold, and silver; precious stones; jewelry; watches; and other valuable articles are prohibited in Express Mail International shipments to Botswana.

Reciprocal Service Name: International Expedited Mail

(**Note:** Service is available to Botswana but not from it.)

Country Code: BW

Areas Served: All

Priority Mail International (230) Price Group 7

Refer to Notice 123, *Price List*, for the applicable retail, commercial base, or commercial plus price.
Weight Limit: 66 lbs.

Note: *Ordinary Priority Mail International includes indemnity at no cost based on weight. (See 230.)*

Priority Mail International — Flat Rate

Flat Rate Envelopes or Small Flat Rate Priced Boxes: The maximum weight is 4 pounds. Refer to Notice 123, *Price List*, for the applicable retail, commercial base, or commercial plus price.

Flat Rate Boxes — Medium and Large: The maximum weight is 20 pounds, or the limit set by the individual country, whichever is less. Refer to Notice 123, *Price List*, for the retail, commercial base, or commercial plus price.

Insurance (232.92)

Available for **Priority Mail International merchandise parcels** only (see 323.72 for markings)

Insured Amount not over	Fee
$50	$2.45
73 max.	3.60

Size Limits (231.22)

Maximum length: 42 inches
Maximum length and girth combined: 79 inches

First-Class Mail International (240) Price Group 7

For the prices and maximum weights for letters, large envelopes (flats), packages (small packets), and postcards, see Notice 123, *Price List*.

Size Limits

Letters: See 241.212
Postcards: See 241.221
Large Envelopes (Flats): See 241.232
Packages (Small Packets): See 241.242 and 241.243

Airmail M-bags (260) — Direct Sack to One Addressee Price Group 7

Refer to Notice 123, *Price List*, for the applicable retail, commercial base, or commercial plus price.
Weight Limit: 66 lbs.

Matter for the Blind (270)

Free when sent as First-Class Mail International, including Priority Mail International Flat Rate Envelopes and Small Flat Rate Priced Boxes. Weight limit: 4 pounds.
Free when sent as Priority Mail International. Weight limit: 15 pounds.

Extra Services

Certificate of Mailing (313)

Individual Pieces	Fee
Individual article (PS Form 3817)	$1.15
Firm mailing books (PS Form 3877), per article listed (minimum 3)	0.44
Duplicate copy of PS Form 3817 or PS Form 3877 (per page)	1.15
Bulk Quantities	**Fee**
First 1,000 pieces (or fraction thereof)	$6.70
Each additional 1,000 pieces (or fraction thereof)	0.80
Duplicate copy of PS Form 3606	1.15

COD and Certified

NOT for International Mail

International Business Reply Service (382)

Fee: Envelopes up to 2 ounces $1.50; Cards $1.00

International Postal Money Order (371)

NOT Available

International Reply Coupons (381)

Fee: $2.20

Registered Mail (330)

Fee: $11.75

Maximum Indemnity: $47.33
Available for First-Class Mail International, including postcards and Flat Rate Envelopes and Small Flat Rate Priced Boxes, and matter for the blind or other physically handicapped persons. Not applicable to M-bags.

Restricted Delivery (350)

Fee: $4.55

Available for registered mail with a return receipt.
Endorsements: Personal Delivery.

Return Receipt (340)

Fee: $2.35

Available for registered mail and insured Priority Mail International parcels only.

Brazil

Country Conditions for Mailing

Prohibitions (130)

Banknotes; currency notes; paper money; securities payable to bearer; and traveler's checks.
Coins; manufactured and unmanufactured platinum, gold, and silver; precious stones; jewels; expensive jewelry; and other valuable articles.
Commercial samples that promote tobacco products or smoking-related merchandise.
Commercial shipments that contain cigarettes, cigarillos, cigars, loose and packaged tobacco, pipes, and other smoking devices.
Medicines whose formulas are not listed in the official pharmacopeias or not licensed by the Brazilian Department of Public Health.
Perishable infectious biological substances.
Perishable noninfectious biological substances.
Poniards, stilettos, poniard blades; canes, umbrellas, or any other articles containing swords, daggers, or guns; handcuffs, and blackjacks.
Primary educational books not written in Portuguese.
Radioactive materials.
Regulation arms and munitions of Brazil and parts. Air guns. Reducing tubes and silencers for firearms.
Salted or smoked meat, and other foodstuffs of animal origin.
Seeds and seedlings of coffee, shrubs.
Used consumer goods (See Observation #5 for exception).

Restrictions

Medicines must be accompanied by a prescription from the attendant Brazilian doctor. This prescription should be on a chemist's form, bearing the name, private address or office of the doctor, his registration number with the Brazil National Medical Council and a Portuguese translation of the instructions, as necessary. Postal packages containing medicaments and not satisfying the above-mentioned conditions will be returned to the senders or, if abandoned, treated as undeliverable items.
Postage stamps are admitted only in registered shipments.
Saccharine and other artificial sweeteners for artificial beverages require permission from the Brazilian Department of Public Health for importation.

Observations

1. First-Class Mail International items may not contain dutiable articles.
2. Import licenses are required for many kinds of goods and senders should ascertain from the addressee before mailing that the necessary documents are held.
3. Imports are allowed by mail, including mail order catalog shipments, up to a value of U.S. $500 (U.S. $1000 for computer software) without the requirement of an import license provided the item is not for resale. Shipments valued at no more than U.S. $50 are duty free and are delivered to the addressee; shipments above U.S. $50 can be picked up at the post office upon payment of import duties. Imports that are prohibited or subject to special regulations must comply with applicable Brazilian government provisions. Identical shipments from the same source to the same person or address in Brazil within a 90 day period are considered part of the same shipment and may be subject to confiscation. Other merchandise that usually enters duty free includes items such as newspapers, maps, books, and magazines.
4. Shipments for which an import permit has not been issued are considered contraband and confiscated.
5. Used consumer goods may only be sent to charitable organizations that are recognized by the Brazilian government as being entities which serve the public interest.

Customs Forms Required (123)

First-Class Mail International items and Priority Mail International Flat Rate Envelopes and Small Flat Rate Priced Boxes:
PS Form 2976 (see 123.61)
Priority Mail International parcels:
PS Form 2976-A inside 2976-E (envelope)

Global Express Guaranteed (210) Price Group 8

Refer to Notice 123, *Price List*, for the applicable retail, commercial base, or commercial plus price.
Weight Limit: 70 lbs.

Insurance (212.5)

Insured Amount not over	Fee	Insured Amount not over	Fee
$100	No Fee	For document reconstruction insurance or non-document insurance coverage above $800, add $1.00 per $100 or fraction thereof, up to a maximum of $2,499 per shipment.	
200	$1.00		
300	2.00		
400	3.00		
500	4.00		
600	5.00		
700	6.00		
800	7.00	$2,499 max.	$24.00

Value Limit (212.1)

The maximum value of a GXG shipment to this country is $2,499 or a lesser amount if limited by content or value.

Size Limits (211.22)

The surface area of the address side of the item to be mailed must be large enough to completely contain the Global Express Guaranteed Air Waybill/Shipping Invoice (shipping label), postage, endorsement, and any applicable markings. The shipping label is approximately 5.5 inches high and 9.5 inches long.
Maximum length: 46 inches
Maximum width: 35 inches
Maximum height: 46 inches
Maximum length and girth combined: 108 inches

General Conditions for Mailing

See Publication 141, *Global Express Guaranteed Service Guide,* for information about areas served in the destination country, allowable contents, packaging and labeling requirements, tracking and tracing, service standards, and other conditions for mailing.

Express Mail International (220) Price Group 15

Refer to Notice 123, *Price List*, for the applicable retail, commercial base, or commercial plus price.
Weight Limit: 66 lbs.

Express Mail International — Flat Rate Envelope and Flat Rate Boxes

The maximum weight for the Express Mail International Flat Rate Envelope and the Express Mail International Flat Rate Boxes is 20 pounds. Refer to Notice 123, *Price List*, for the applicable retail, commercial base, or commercial plus price.

Insurance (222.8)

Available for **Express Mail International merchandise shipments** only

Insured Amount not over	Fee	Insured Amount not over	Fee
$100	No Fee	For insurance coverage above $2,000, add $1.50 for each $500 or fraction thereof, up to a maximum of $5,000 per shipment.	
200	$0.85		
500	2.35		
1,000	3.85		
1,500	5.35		
2,000	6.85	$5,000 max.	$15.85

Articles Admitted	Required Customs Form/Endorsement
Correspondence and business papers.	PS Form 2976, Customs — *CN 22 and Sender's Declaration*. Endorse item clearly next to mailing label as BUSINESS PAPERS.
Merchandise, merchandise samples without commercial value, documents, computer data, and all articles subject to customs duty.	PS Form 2976-A, *Customs Declaration and Dispatch Note CP 72*, inside a PS Form 2976-E, *Customs Declaration Envelope CP 91*. Include an invoice with all commercial shipments.

Size Limits (221.52)

Maximum length: 36 inches
Maximum length and girth combined: 79 inches

Note:

Coins; banknotes; currency notes, including paper money; securities of any kind payable to bearer; traveler's checks; platinum, gold, and silver; precious stones; jewelry; watches; and other valuable articles are prohibited in Express Mail International shipments to Brazil.

Reciprocal Service Name: Serca

Country Code: BR

Areas Served: All

Priority Mail International (230) Price Group 15

Refer to Notice 123, *Price List*, for the applicable retail, commercial base, or commercial plus price.
Weight Limit: 66 lbs.

Note: *Ordinary Priority Mail International includes indemnity at no cost based on weight. (See 230.)*

Priority Mail International — Flat Rate

Flat Rate Envelopes or Small Flat Rate Priced Boxes: The maximum weight is 4 pounds. Refer to Notice 123, *Price List*, for the applicable retail, commercial base, or commercial plus price.

Flat Rate Boxes — Medium and Large: The maximum weight is 20 pounds, or the limit set by the individual country, whichever is less. Refer to Notice 123, *Price List*, for the retail, commercial base, or commercial plus price.

Insurance (232.92)

Available for **Priority Mail International merchandise parcels** only (see 323.72 for markings)

Insured Amount not over	Fee	Insured Amount not over	Fee
$50	$2.45	Add $1.15 for each additional $100 or fraction of insurance coverage.	
100	3.60		
200	4.75		
300	5.90		
400	7.05		
500	8.20	$2,915 max.	$36.95

Size Limits (231.22)

Maximum length: 42 inches
Maximum length and girth combined: 79 inches

First-Class Mail International (240) Price Group 9

For the prices and maximum weights for letters, large envelopes (flats), packages (small packets), and postcards, see Notice 123, *Price List*.

Size Limits

Letters: See 241.212
Postcards: See 241.221
Large Envelopes (Flats): See 241.232
Packages (Small Packets): See 241.242 and 241.243

Airmail M-bags (260) — Direct Sack to One Addressee Price Group 9

Refer to Notice 123, *Price List*, for the applicable retail, commercial base, or commercial plus price.
Weight Limit: 66 lbs.

Matter for the Blind (270)

Free when sent as First-Class Mail International, including Priority Mail International Flat Rate Envelopes and Small Flat Rate Priced Boxes. Weight limit: 4 pounds.
Free when sent as Priority Mail International. Weight limit: 15 pounds.

Extra Services

Certificate of Mailing (313)

Individual Pieces	Fee
Individual article (PS Form 3817)	$1.15
Firm mailing books (PS Form 3877), per article listed (minimum 3)	0.44
Duplicate copy of PS Form 3817 or PS Form 3877 (per page)	1.15
Bulk Quantities	**Fee**
First 1,000 pieces (or fraction thereof)	$6.70
Each additional 1,000 pieces (or fraction thereof)	0.80
Duplicate copy of PS Form 3606	1.15

COD and Certified

NOT for International Mail

International Business Reply Service (382)

Fee: Envelopes up to 2 ounces $1.50; Cards $1.00

International Postal Money Order (371)

NOT Available

International Reply Coupons (381)

Fee: $2.20

Registered Mail (330)

Fee: $11.75

Maximum Indemnity: $47.33
Available for First-Class Mail International, including postcards and Flat Rate Envelopes and Small Flat Rate Priced Boxes, and matter for the blind or other physically handicapped persons. Not applicable to M-bags.

Restricted Delivery (350)

Fee: $4.55

Available for registered mail with a return receipt.
Endorsements: A remettre en main propre.

Return Receipt (340)

Fee: $2.35

Available for registered mail and insured Priority Mail International parcels only.

British Virgin Islands

Country Conditions for Mailing

Prohibitions (130)
Currency is not admitted in registered items.
Radioactive materials.

Restrictions
None

Observations
1. The U.S. Virgin Islands are a United States overseas possession comprised of the islands of **Saint Thomas**, **Saint Croix**, and **Saint John.** Mailpieces destined for any of those islands are subject to *domestic* postage rates, mail classification definitions, preparation requirements, weight and size limits, ZIP Code specifications, markings and endorsements, and other mailing conditions that are referenced in *Mailing Standards of the United States Postal Service,* Domestic Mail Manual (DMM).
2. The British Virgin Islands are a foreign destination comprised of the islands of **Anegada**, **Tortola**, **Jost Van Dyke**, **Peter Island**, and **Virgin Gorda.** Mailpieces destined for any of those islands are subject to *international* postage rates, mail classification definitions, preparation requirements, weight and size limits, addressing standards, customs form requirements, and other country specific conditions for mailing that are referenced in the *International Mail Manual* (IMM).

Customs Forms Required (123)
First-Class Mail International items and Priority Mail International Flat Rate Envelopes and Small Flat Rate Priced Boxes:
PS Form 2976 (see 123.61)
Priority Mail International parcels:
PS Form 2976-A inside 2976-E (envelope)

Global Express Guaranteed (210) Price Group 7

Refer to Notice 123, *Price List*, for the applicable retail, commercial base, or commercial plus price.
Weight Limit: 70 lbs.

Insurance (212.5)

Insured Amount not over	Fee	Insured Amount not over	Fee
$100	No Fee	For document reconstruction insurance or non-document insurance coverage above $800, add $1.00 per $100 or fraction thereof, up to a maximum of $2,499 per shipment.	
200	$1.00		
300	2.00		
400	3.00		
500	4.00		
600	5.00		
700	6.00		
800	7.00	$2,499 max.	$24.00

Value Limit (212.1)
The maximum value of a GXG shipment to this country is $2,499 or a lesser amount if limited by content or value.

Size Limits (211.22)
The surface area of the address side of the item to be mailed must be large enough to completely contain the Global Express Guaranteed Air Waybill/Shipping Invoice (shipping label), postage, endorsement, and any applicable markings. The shipping label is approximately 5.5 inches high and 9.5 inches long.
Maximum length: 46 inches
Maximum width: 35 inches
Maximum height: 46 inches
Maximum length and girth combined: 108 inches

General Conditions for Mailing
See Publication 141, *Global Express Guaranteed Service Guide,* for information about areas served in the destination country, allowable contents, packaging and labeling requirements, tracking and tracing, service standards, and other conditions for mailing.

Express Mail International (220)

Not Available

Priority Mail International (230) Price Group 9

Refer to Notice 123, *Price List*, for the applicable retail, commercial base, or commercial plus price.
Weight Limit: 44 lbs.

Note: *Ordinary Priority Mail International includes indemnity at no cost based on weight. (See 230.)*

Priority Mail International — Flat Rate
Flat Rate Envelopes or Small Flat Rate Priced Boxes: The maximum weight is 4 pounds. Refer to Notice 123, *Price List*, for the applicable retail, commercial base, or commercial plus price.

Flat Rate Boxes — Medium and Large: The maximum weight is 20 pounds, or the limit set by the individual country, whichever is less. Refer to Notice 123, *Price List*, for the retail, commercial base, or commercial plus price.

Insurance (232.92)
Available for **Priority Mail International merchandise parcels** only (see 323.72 for markings)

Insured Amount not over	Fee
$50	$2.45
100	3.60
200	4.75
300	5.90
400	7.05
500 max.	8.20

Size Limits (231.22)
Maximum length: 42 inches
Maximum length and girth combined: 79 inches

First-Class Mail International (240) Price Group 9

For the prices and maximum weights for letters, large envelopes (flats), packages (small packets), and postcards, see Notice 123, *Price List*.

Size Limits

Letters: See 241.212
Postcards: See 241.221
Large Envelopes (Flats): See 241.232
Packages (Small Packets): See 241.242 and 241.243

Airmail M-bags (260) — Direct Sack to One Addressee Price Group 9

Refer to Notice 123, *Price List*, for the applicable retail, commercial base, or commercial plus price.
Weight Limit: 66 lbs.

Matter for the Blind (270)

Free when sent as First-Class Mail International, including Priority Mail International Flat Rate Envelopes and Small Flat Rate Priced Boxes. Weight limit: 4 pounds.
Free when sent as Priority Mail International. Weight limit: 15 pounds.

Extra Services

Certificate of Mailing (313)

Individual Pieces	Fee
Individual article (PS Form 3817)	$1.15
Firm mailing books (PS Form 3877), per article listed (minimum 3)	0.44
Duplicate copy of PS Form 3817 or PS Form 3877 (per page)	1.15
Bulk Quantities	**Fee**
First 1,000 pieces (or fraction thereof)	$6.70
Each additional 1,000 pieces (or fraction thereof)	0.80
Duplicate copy of PS Form 3606	1.15

COD and Certified **NOT** for International Mail

International Business Reply Service (382)

Fee: Envelopes up to 2 ounces $1.50; Cards $1.00

International Postal Money Order (371)

Use MO Form MP1
Maximum Amount Available: $700 **Fee:** $4.45
Money Order Inquiry: **Fee:** $5.50

International Reply Coupons (381) **Fee:** $2.20

Registered Mail (330) **Fee:** $11.75

Maximum Indemnity: $47.33
Available for First-Class Mail International, including postcards and Flat Rate Envelopes and Small Flat Rate Priced Boxes, and matter for the blind or other physically handicapped persons. Not applicable to M-bags.

Restricted Delivery (350) NOT Available

Return Receipt (340) **Fee:** $2.35

Available for registered mail and insured Priority Mail International parcels only.

Brunei Darussalam

Country Conditions for Mailing

Prohibitions (130)

Coins; banknotes; currency notes (paper money); securities payable to bearer; traveler's checks; platinum, gold or silver, manufactured or not; precious stones; jewelry; and other valuable articles.
Perishable infectious biological substances.
Perishable noninfectious biological substances.
Radioactive materials.

Restrictions

Books, magazines, religious materials, cassettes, and video tape are subject to clearance from the Controller of Publications or the Religious Affairs Department.

Observations

A license must be obtained from the Director of Medical Services for the importation of medicines, drugs, and insecticides, whether consigned to commercial firms or private individuals.
A license must be obtained from the Director of Agriculture for the importation of agricultural and veterinary products. The importation of plants, seeds, etc. are subject to permit issued in advance by the Department of Agriculture.

Customs Forms Required (123)

First-Class Mail International items and Priority Mail International Flat Rate Envelopes and Small Flat Rate Priced Boxes:
PS Form 2976 (see 123.61)
Priority Mail International parcels:
PS Form 2976-A inside 2976-E (envelope)

Global Express Guaranteed (210) Price Group 4

Refer to Notice 123, *Price List*, for the applicable retail, commercial base, or commercial plus price.

Weight Limit: 70 lbs.

Insurance (212.5)

Insured Amount not over	Fee	Insured Amount not over	Fee
$100	No Fee	For document reconstruction insurance or non-document insurance coverage above $800, add $1.00 per $100 or fraction thereof, up to a maximum of $2,499 per shipment.	
200	$1.00		
300	2.00		
400	3.00		
500	4.00		
600	5.00		
700	6.00		
800	7.00	$2,499 max.	$24.00

Value Limit (212.1)

The maximum value of a GXG shipment to this country is $2,499 or a lesser amount if limited by content or value.

Size Limits (211.22)

The surface area of the address side of the item to be mailed must be large enough to completely contain the Global Express Guaranteed Air Waybill/Shipping Invoice (shipping label), postage, endorsement, and any applicable markings. The shipping label is approximately 5.5 inches high and 9.5 inches long.
Maximum length: 46 inches
Maximum width: 35 inches
Maximum height: 46 inches
Maximum length and girth combined: 108 inches

General Conditions for Mailing

See Publication 141, *Global Express Guaranteed Service Guide,* for information about areas served in the destination country, allowable contents, packaging and labeling requirements, tracking and tracing, service standards, and other conditions for mailing.

Express Mail International (220) Price Group 6

Refer to Notice 123, *Price List*, for the applicable retail, commercial base, or commercial plus price.

Weight Limit: 66 lbs.

Express Mail International — Flat Rate Envelope and Flat Rate Boxes

The maximum weight for the Express Mail International Flat Rate Envelope and the Express Mail International Flat Rate Boxes is 20 pounds. Refer to Notice 123, *Price List*, for the applicable retail, commercial base, or commercial plus price.

Insurance (222.8)

Available for **Express Mail International merchandise shipments** only

Insured Amount not over	Fee	Insured Amount not over	Fee
$100	No Fee	For insurance coverage above $2,000, add $1.50 for each $500 or fraction thereof, up to a maximum of $5,000 per shipment.	
200	$0.85		
500	2.35		
1,000	3.85		
1,500	5.35		
2,000	6.85	$5,000 max.	$15.85

Articles Admitted	Required Customs Form/Endorsement
Correspondence and business papers.	PS Form 2976, Customs — *CN 22 and Sender's Declaration*. Endorse item clearly next to mailing label as BUSINESS PAPERS.
Merchandise samples without commercial value and not subject to customs duty.	PS Form 2976, Customs — *CN 22 and Sender's Declaration*.
Merchandise and all articles subject to customs duty.	PS Form 2976-A, *Customs Declaration and Dispatch Note CP 72,* inside a PS Form 2976-E, *Customs Declaration Envelope CP 91.* Include two copies of a commercial invoice in each item.

Size Limits (221.52)

Maximum length: 36 inches
Maximum length and girth combined: 79 inches

Note:

Coins; banknotes; currency notes, including paper money; securities of any kind payable to bearer; traveler's checks; platinum, gold, and silver; precious stones; jewelry; watches; and other valuable articles are prohibited in Express Mail International shipments to Brunei Darussalam.

Reciprocal Service Name: EMS

Country Code: BN

Areas Served:
The following locations are served:
Bandar Seri Begawan
Kuala Belait
Muara
Seria
Tutong

Priority Mail International (230) Price Group 6

Refer to Notice 123, *Price List*, for the applicable retail, commercial base, or commercial plus price.
Weight Limit: 44 lbs.

Note: *Ordinary Priority Mail International includes indemnity at no cost based on weight. (See 230.)*

Priority Mail International — Flat Rate
Flat Rate Envelopes or Small Flat Rate Priced Boxes: The maximum weight is 4 pounds. Refer to Notice 123, *Price List*, for the applicable retail, commercial base, or commercial plus price.

Flat Rate Boxes — Medium and Large: The maximum weight is 20 pounds, or the limit set by the individual country, whichever is less. Refer to Notice 123, *Price List*, for the retail, commercial base, or commercial plus price.

Insurance (232.92) NOT Available

Size Limits (231.22)
Maximum length: 42 inches
Maximum length and girth combined: 79 inches

First-Class Mail International (240) Price Group 6
For the prices and maximum weights for letters, large envelopes (flats), packages (small packets), and postcards, see Notice 123, *Price List*.

Size Limits
Letters: See 241.212
Postcards: See 241.221
Large Envelopes (Flats): See 241.232
Packages (Small Packets): See 241.242 and 241.243

Airmail M-bags (260) — Direct Sack to One Addressee Price Group 6

Refer to Notice 123, *Price List*, for the applicable retail, commercial base, or commercial plus price.
Weight Limit: 66 lbs.

Matter for the Blind (270)
Free when sent as First-Class Mail International, including Priority Mail International Flat Rate Envelopes and Small Flat Rate Priced Boxes. Weight limit: 4 pounds.
Free when sent as Priority Mail International. Weight limit: 15 pounds.

Extra Services

Certificate of Mailing (313)

Individual Pieces	Fee
Individual article (PS Form 3817)	$1.15
Firm mailing books (PS Form 3877), per article listed (minimum 3)	0.44
Duplicate copy of PS Form 3817 or PS Form 3877 (per page)	1.15
Bulk Quantities	**Fee**
First 1,000 pieces (or fraction thereof)	$6.70
Each additional 1,000 pieces (or fraction thereof)	0.80
Duplicate copy of PS Form 3606	1.15

COD and Certified **NOT** for International Mail

International Business Reply Service (382)
Fee: Envelopes up to 2 ounces $1.50; Cards $1.00

International Postal Money Order (371)
NOT Available

International Reply Coupons (381) **Fee:** $2.20

Registered Mail (330) **Fee:** $11.75
Maximum Indemnity: $47.33
Available for First-Class Mail International, including postcards and Flat Rate Envelopes and Small Flat Rate Priced Boxes, and matter for the blind or other physically handicapped persons. Not applicable to M-bags.

Restricted Delivery (350) NOT Available

Return Receipt (340) **Fee:** $2.35
Available for registered mail only.

Bulgaria

Country Conditions for Mailing

Prohibitions (130)

Arms and ammunition; explosive, flammable, or other hazardous materials.
Articles of food and foodstuffs in hermetically sealed containers unless the contents are visible.
Bulgarian currency except with the permission of the Ministry of Finance of Bulgaria.
Coins; banknotes; currency notes; securities payable to bearer; traveler's cheques; platinum, gold, and silver, whether manufactured or not; precious stones; jewels; or other valuable articles in uninsured parcels.
Gift shipments mailed by commercial firms.
"Musical" cards (cards that play a sound recording when opened).
Narcotics, psychotropic substances, anesthetics, or toxic materials.
Obscene or immoral articles.
Printed matter, photographs, films, sound recordings, manuscripts, drawings, musical notes, and similar articles, except single copies for the personal use of the addressees and not contrary to Bulgarian laws and customs.
Radioactive materials.
Religious materials connected with prohibited or unregistered sects or organizations.
Samples of merchandise.
Used clothing, footwear, and bed coverings.

Restrictions

Import licenses are required for all commercial shipments, and for gift shipments if the customs duty thereon exceeds 100 leva.
Medicines must be approved by the Bulgarian Ministry of Health.
Postage stamps may only be exchanged between philatelists through the intermediary of the Postal Philatelic Service of Bulgaria. The articles must be addressed to that service, which delivers them to the addressees.

Observations

First-Class Mail International items may not contain dutiable articles.

Customs Forms Required (123)

First-Class Mail International items and Priority Mail International Flat Rate Envelopes and Small Flat Rate Priced Boxes:
PS Form 2976 (see 123.61)
Priority Mail International parcels:
PS Form 2976-A inside 2976-E (envelope)

Global Express Guaranteed (210) Price Group 4

Refer to Notice 123, *Price List*, for the applicable retail, commercial base, or commercial plus price.
Weight Limit: 70 lbs.

Insurance (212.5)

Insured Amount not over	Fee	Insured Amount not over	Fee
$100	No Fee	For document reconstruction insurance or non-document insurance coverage above $800, add $1.00 per $100 or fraction thereof, up to a maximum of $2,499 per shipment.	
200	$1.00		
300	2.00		
400	3.00		
500	4.00		
600	5.00		
700	6.00		
800	7.00	$2,499 max.	$24.00

Value Limit (212.1)

The maximum value of a GXG shipment to this country is $2,499 or a lesser amount if limited by content or value.

Size Limits (211.22)

The surface area of the address side of the item to be mailed must be large enough to completely contain the Global Express Guaranteed Air Waybill/Shipping Invoice (shipping label), postage, endorsement, and any applicable markings. The shipping label is approximately 5.5 inches high and 9.5 inches long.
Maximum length: 46 inches
Maximum width: 35 inches
Maximum height: 46 inches
Maximum length and girth combined: 108 inches

General Conditions for Mailing

See Publication 141, *Global Express Guaranteed Service Guide,* for information about areas served in the destination country, allowable contents, packaging and labeling requirements, tracking and tracing, service standards, and other conditions for mailing.

Express Mail International (220) Price Group 4

Refer to Notice 123, *Price List*, for the applicable retail, commercial base, or commercial plus price.
Weight Limit: 66 lbs.

Express Mail International — Flat Rate Envelope and Flat Rate Boxes

The maximum weight for the Express Mail International Flat Rate Envelope and the Express Mail International Flat Rate Boxes is 20 pounds. Refer to Notice 123, *Price List*, for the applicable retail, commercial base, or commercial plus price.

Insurance (222.8)

Available for **Express Mail International merchandise shipments** only

Insured Amount not over	Fee	Insured Amount not over	Fee
$100	No Fee	For insurance coverage above $2,000, add $1.50 for each $500 or fraction thereof, up to a maximum of $5,000 per shipment.	
200	$0.85		
500	2.35		
1,000	3.85		
1,500	5.35		
2,000	6.85	$5,000 max.	$15.85

Articles Admitted	Required Customs Form/Endorsement
Correspondence and business papers.	PS Form 2976, Customs — *CN 22 and Sender's Declaration*. Endorse item clearly next to mailing label as BUSINESS PAPERS.
Merchandise samples without commercial value and not subject to customs duty.	PS Form 2976, Customs — *CN 22 and Sender's Declaration*.
Merchandise and all articles subject to customs duty.	PS Form 2976-A, *Customs Declaration and Dispatch Note CP 72,* inside a PS Form 2976-E, *Customs Declaration Envelope CP 91.*

Size Limits (221.52)
Maximum length: 36 inches
Maximum length and girth combined: 79 inches

Note:
Coins; banknotes; currency notes, including paper money; securities of any kind payable to bearer; traveler's checks; platinum, gold, and silver; precious stones; jewelry; watches; and other valuable articles are prohibited in Express Mail International shipments to Bulgaria.

Reciprocal Service Name: EMS

Country Code: BG

Areas Served: All

Priority Mail International (230) Price Group 4

Refer to Notice 123, *Price List*, for the applicable retail, commercial base, or commercial plus price.
Weight Limit: 70 lbs.

Note: *Ordinary Priority Mail International includes indemnity at no cost based on weight. (See 230.)*

Priority Mail International — Flat Rate
Flat Rate Envelopes or Small Flat Rate Priced Boxes: The maximum weight is 4 pounds. Refer to Notice 123, *Price List*, for the applicable retail, commercial base, or commercial plus price.

Flat Rate Boxes — Medium and Large: The maximum weight is 20 pounds, or the limit set by the individual country, whichever is less. Refer to Notice 123, *Price List*, for the retail, commercial base, or commercial plus price.

Insurance (232.92)
Available for **Priority Mail International merchandise parcels** only (see 323.72 for markings)

Insured Amount not over	**Fee**	**Insured Amount** not over	**Fee**
$50	$2.45		
100	3.60	Add $1.15 for each additional $100 or fraction of insurance coverage.	
200	4.75		
300	5.90		
400	7.05		
500	8.20	$1,115 max.	$16.25

Size Limits (231.22)
Maximum length: 42 inches
Maximum length and girth combined: 79 inches

First-Class Mail International (240) Price Group 4
For the prices and maximum weights for letters, large envelopes (flats), packages (small packets), and postcards, see Notice 123, *Price List*.

Size Limits
Letters: See 241.212
Postcards: See 241.221
Large Envelopes (Flats): See 241.232
Packages (Small Packets): See 241.242 and 241.243

Airmail M-bags (260) — Direct Sack to One Addressee Price Group 4

Refer to Notice 123, *Price List*, for the applicable retail, commercial base, or commercial plus price.
Weight Limit: 66 lbs.

Matter for the Blind (270)
Free when sent as First-Class Mail International, including Priority Mail International Flat Rate Envelopes and Small Flat Rate Priced Boxes. Weight limit: 4 pounds.
Free when sent as Priority Mail International. Weight limit: 15 pounds.

Extra Services

Certificate of Mailing (313)

Individual Pieces	**Fee**
Individual article (PS Form 3817)	$1.15
Firm mailing books (PS Form 3877), per article listed (minimum 3)	0.44
Duplicate copy of PS Form 3817 or PS Form 3877 (per page)	1.15
Bulk Quantities	**Fee**
First 1,000 pieces (or fraction thereof)	$6.70
Each additional 1,000 pieces (or fraction thereof)	0.80
Duplicate copy of PS Form 3606	1.15

COD and Certified **NOT** for International Mail

International Business Reply Service (382)
Fee: Envelopes up to 2 ounces $1.50; Cards $1.00

International Postal Money Order (371)
NOT Available

International Reply Coupons (381) **Fee:** $2.20

Registered Mail (330) **Fee:** $11.75
Maximum Indemnity: $47.33
Available for First-Class Mail International, including postcards and Flat Rate Envelopes and Small Flat Rate Priced Boxes, and matter for the blind or other physically handicapped persons. Not applicable to M-bags.

Restricted Delivery (350) **Fee:** $4.55
Available for registered mail with a return receipt.
Endorsements: Licno.

Return Receipt (340) **Fee:** $2.35
Available for registered mail and insured Priority Mail International parcels only.

Burkina Faso

Country Conditions for Mailing

Prohibitions (130)
Perishable infectious biological substances.
Perishable noninfectious biological substances.
Radioactive materials.

Restrictions
Coins; banknotes; currency notes; traveler's checks; securities payable to the bearer; platinum, gold or silver, manufactured or not; precious stones; jewelry; and other valuable articles may only be sent in registered shipments.

Observations
First-Class Mail International items containing dutiable articles must be registered.

Customs Forms Required (123)
First-Class Mail International items and Priority Mail International Flat Rate Envelopes and Small Flat Rate Priced Boxes:
PS Form 2976 (see 123.61)
Priority Mail International parcels:
PS Form 2976-A inside 2976-E (envelope)

Global Express Guaranteed (210) Price Group 4

Refer to Notice 123, *Price List*, for the applicable retail, commercial base, or commercial plus price.
Weight Limit: 70 lbs.

Insurance (212.5)

Insured Amount not over	Fee	Insured Amount not over	Fee
$100	No Fee	For document reconstruction insurance or non-document insurance coverage above $800, add $1.00 per $100 or fraction thereof, up to a maximum of $2,499 per shipment.	
200	$1.00		
300	2.00		
400	3.00		
500	4.00		
600	5.00		
700	6.00		
800	7.00	$2,499 max.	$24.00

Value Limit (212.1)
The maximum value of a GXG shipment to this country is $2,499 or a lesser amount if limited by content or value.

Size Limits (211.22)
The surface area of the address side of the item to be mailed must be large enough to completely contain the Global Express Guaranteed Air Waybill/Shipping Invoice (shipping label), postage, endorsement, and any applicable markings. The shipping label is approximately 5.5 inches high and 9.5 inches long.
Maximum length: 46 inches
Maximum width: 35 inches
Maximum height: 46 inches
Maximum length and girth combined: 108 inches

General Conditions for Mailing
See Publication 141, *Global Express Guaranteed Service Guide,* for information about areas served in the destination country, allowable contents, packaging and labeling requirements, tracking and tracing, service standards, and other conditions for mailing.

Express Mail International (220) Price Group 7

Refer to Notice 123, *Price List*, for the applicable retail, commercial base, or commercial plus price.
Weight Limit: 70 lbs.

Express Mail International — Flat Rate Envelope and Flat Rate Boxes
The maximum weight for the Express Mail International Flat Rate Envelope and the Express Mail International Flat Rate Boxes is 20 pounds. Refer to Notice 123, *Price List*, for the applicable retail, commercial base, or commercial plus price.

Insurance (222.8)
Available for **Express Mail International merchandise shipments** only

Insured Amount not over	Fee	Insured Amount not over	Fee
$100	No Fee	For insurance coverage above $2,000, add $1.50 for each $500 or fraction thereof, up to a maximum of $5,000 per shipment.	
200	$0.85		
500	2.35		
1,000	3.85		
1,500	5.35		
2,000	6.85	$5,000 max.	$15.85

Articles Admitted	Required Customs Form/Endorsement
Correspondence and business papers.	No form required. Endorse item clearly next to mailing label as BUSINESS PAPERS.
Merchandise samples without commercial value.	PS Form 2976, Customs — *CN 22 and Sender's Declaration*.
Merchandise and all articles subject to customs duty.	PS Form 2976-A, *Customs Declaration and Dispatch Note CP 72,* inside a PS Form 2976-E, *Customs Declaration Envelope CP 91*.

Size Limits (221.52)
Maximum length: 36 inches
Maximum length and girth combined: 79 inches

Notes:
1. A commercial invoice is required for merchandise or merchandise samples valued at more than 5,000 F CFA (U.S. $16).
2. Detailed customs invoices of Burkina Faso are required for Express Mail International items valued at more than 50,000 F CFA (U.S. $166).
3. Perishable items, such as fruits and vegetables and all drugs, are *prohibited* in Express Mail International shipments.
4. Merchandise will not be delivered to the addressee. The addressee must pick it up at the post office.
5. Coins; banknotes; currency notes, including paper money; securities of any kind payable to bearer; traveler's checks; platinum, gold, and silver; precious stones; jewelry; watches; and other valuable articles are prohibited in Express Mail International shipments to Burkina Faso.

Reciprocal Service Name: EMS/Burkina Express Post International

Country Code: BF

Areas Served:
Express Mail International is available ***only*** to the following locations:
Bobo-Dioulasso
Ouagadougou

Priority Mail International (230) Price Group 7

Refer to Notice 123, *Price List*, for the applicable retail, commercial base, or commercial plus price.
Weight Limit: 66 lbs.

Note: *Ordinary Priority Mail International includes indemnity at no cost based on weight. (See 230.)*

Priority Mail International — Flat Rate
Flat Rate Envelopes or Small Flat Rate Priced Boxes: The maximum weight is 4 pounds. Refer to Notice 123, *Price List*, for the applicable retail, commercial base, or commercial plus price.

Flat Rate Boxes — Medium and Large: The maximum weight is 20 pounds, or the limit set by the individual country, whichever is less. Refer to Notice 123, *Price List*, for the retail, commercial base, or commercial plus price.

Insurance (232.92)
Available for **Priority Mail International merchandise parcels** only (see 323.72 for markings)

Insured Amount not over	Fee	Insured Amount not over	Fee
$50	$2.45		
100	3.60	Add $1.15 for each additional $100 or fraction of insurance coverage.	
200	4.75		
300	5.90		
400	7.05		
500	8.20	$969 max.	$13.95

Size Limits (231.22)
Maximum length: 42 inches
Maximum length and girth combined: 79 inches

First-Class Mail International (240) Price Group 7
For the prices and maximum weights for letters, large envelopes (flats), packages (small packets), and postcards, see Notice 123, *Price List*.

Size Limits
Letters: See 241.212
Postcards: See 241.221
Large Envelopes (Flats): See 241.232
Packages (Small Packets): See 241.242 and 241.243

Airmail M-bags (260) — Direct Sack to One Addressee Price Group 7

Refer to Notice 123, *Price List*, for the applicable retail, commercial base, or commercial plus price.
Weight Limit: 66 lbs.

Matter for the Blind (270)
Free when sent as First-Class Mail International, including Priority Mail International Flat Rate Envelopes and Small Flat Rate Priced Boxes. Weight limit: 4 pounds.
Free when sent as Priority Mail International. Weight limit: 15 pounds.

Extra Services

Certificate of Mailing (313)

Individual Pieces	Fee
Individual article (PS Form 3817)	$1.15
Firm mailing books (PS Form 3877), per article listed (minimum 3)	0.44
Duplicate copy of PS Form 3817 or PS Form 3877 (per page)	1.15
Bulk Quantities	**Fee**
First 1,000 pieces (or fraction thereof)	$6.70
Each additional 1,000 pieces (or fraction thereof)	0.80
Duplicate copy of PS Form 3606	1.15

COD and Certified
NOT for International Mail

International Business Reply Service (382)
Fee: Envelopes up to 2 ounces $1.50; Cards $1.00

International Postal Money Order (371)
NOT Available

International Reply Coupons (381)
Fee: $2.20

Registered Mail (330)
Fee: $11.75
Maximum Indemnity: $47.33
Available for First-Class Mail International, including postcards and Flat Rate Envelopes and Small Flat Rate Priced Boxes, and matter for the blind or other physically handicapped persons. Not applicable to M-bags.

Restricted Delivery (350)
NOT Available

Return Receipt (340)
Fee: $2.35
Available for registered mail and insured Priority Mail International parcels only.

Burma
(Myanmar)

Country Conditions for Mailing

Prohibitions (130)
All goods manufactured outside Her Majesty's dominions and bearing the British Royal Arms or imitations thereof; or bearing as a mark or label a portrait of any member of the Royal Family of England.
Coins; banknotes; currency notes (paper money); traveler's checks; platinum, gold, or silver (manufactured or not); precious stones; jewelry; and other valuable articles.
Imitation and toy pistols and revolvers.
Money, gold or silver (in bullion) exceeding L5 in value, except coins obviously intended as ornaments.
Perishable infectious biological substances.
Perishable noninfectious biological substances.
Radioactive materials.

Restrictions
Hypodermic syringes or needles may only be imported on behalf of the Government or addressed to practicing physicians.
Noninflammable or safety films must be contained in a strong metal box packed in a solid wooden or thick cardboard receptacle, labeled very clearly in red "Contains only noninflammable films" on the outside of each package.
Wireless telegraph equipment, and transceivers and receivers, require a permit from the Director General of Posts and Telegraphs; receivers alone may be imported upon application to the customs authorities.

Observations
1. The following may not be sent as merchandise at the First-Class Mail International price if they are liable to customs duty: Works of art (including photographs), printed forms, account books, manuscript books, labels, advertising matter (except trade catalogs and circulars), picture books, almanacs, maps, old paper, and old newspapers serving as packing paper.
2. Addressees are required to obtain import licenses to take delivery of shipments, including those sent as gifts. It is recommended that senders inform the addressees of the contents of shipment prior to mailing, so that they may apply for the necessary import license.

Customs Forms Required (123)
First-Class Mail International items and Priority Mail International Flat Rate Envelopes and Small Flat Rate Priced Boxes:
PS Form 2976 (see 123.61)
Priority Mail International parcels:
PS Form 2976-A inside 2976-E (envelope)

Global Express Guaranteed (210)
Not Available

Express Mail International (220)
Not Available

Priority Mail International (230) **Price Group 6**

Refer to Notice 123, *Price List*, for the applicable retail, commercial base, or commercial plus price.
Weight Limit: 22 lbs.

Note: *Ordinary Priority Mail International includes indemnity at no cost based on weight. (See 230.)*

Priority Mail International — Flat Rate
Flat Rate Envelopes or Small Flat Rate Priced Boxes: The maximum weight is 4 pounds. Refer to Notice 123, *Price List*, for the applicable retail, commercial base, or commercial plus price.

Flat Rate Boxes — Medium and Large: The maximum weight is 20 pounds, or the limit set by the individual country, whichever is less. Refer to Notice 123, *Price List*, for the retail, commercial base, or commercial plus price.

Insurance (232.92) NOT Available

Size Limits (231.22)
Maximum length: 42 inches
Maximum length and girth combined: 79 inches

First-Class Mail International (240) **Price Group 6**
For the prices and maximum weights for letters, large envelopes (flats), packages (small packets), and postcards, see Notice 123, *Price List*.

Size Limits
Letters: See 241.212
Postcards: See 241.221
Large Envelopes (Flats): See 241.232
Packages (Small Packets): See 241.242 and 241.243

Airmail M-bags (260) — Direct Sack to One Addressee **Price Group 6**

Refer to Notice 123, *Price List*, for the applicable retail, commercial base, or commercial plus price.
Weight Limit: 66 lbs.

Matter for the Blind (270)
Free when sent as First-Class Mail International, including Priority Mail International Flat Rate Envelopes and Small Flat Rate Priced Boxes. Weight limit: 4 pounds.
Free when sent as Priority Mail International. Weight limit: 15 pounds.

Extra Services

Certificate of Mailing (313)

Individual Pieces	Fee
Individual article (PS Form 3817)	$1.15
Firm mailing books (PS Form 3877), per article listed (minimum 3)	0.44
Duplicate copy of PS Form 3817 or PS Form 3877 (per page)	1.15
Bulk Quantities	**Fee**
First 1,000 pieces (or fraction thereof)	$6.70
Each additional 1,000 pieces (or fraction thereof)	0.80
Duplicate copy of PS Form 3606	1.15

COD and Certified

NOT for International Mail

International Business Reply Service (382)

Fee: Envelopes up to 2 ounces $1.50; Cards $1.00

International Postal Money Order (371)

NOT Available

International Reply Coupons (381)

Fee: $2.20

Registered Mail (330)

Fee: $11.75

Maximum Indemnity: $47.33
Available for First-Class Mail International, including postcards and Flat Rate Envelopes and Small Flat Rate Priced Boxes, and matter for the blind or other physically handicapped persons. Not applicable to M-bags.

Restricted Delivery (350)

NOT Available

Return Receipt (340)

Fee: $2.35

Available for registered mail only.

Burundi

Country Conditions for Mailing

Prohibitions (130)
Coins; currency notes; manufactured and unmanufactured platinum, gold, and silver; precious stones; jewels; expensive jewelry; and other valuable articles.
Perishable infectious biological substances.
Perishable noninfectious biological substances.

Restrictions
Addressees in Burundi are required to obtain special permission to receive arms, medicines, saccharine and distilling apparatus.
Banknotes; securities payable to bearer; and traveler's checks, up to a total of 50 Burundi francs; are admitted in registered shipments.

Observations
None

Customs Forms Required (123)
First-Class Mail International items and Priority Mail International Flat Rate Envelopes and Small Flat Rate Priced Boxes:
PS Form 2976 (see 123.61)
Priority Mail International parcels:
PS Form 2976-A inside 2976-E (envelope)

Global Express Guaranteed (210) Price Group 4

Refer to Notice 123, *Price List*, for the applicable retail, commercial base, or commercial plus price.
Weight Limit: 70 lbs.

Insurance (212.5)

Insured Amount not over	Fee	Insured Amount not over	Fee
$100	No Fee	For document reconstruction insurance or non-document insurance coverage above $800, add $1.00 per $100 or fraction thereof, up to a maximum of $2,499 per shipment.	
200	$1.00		
300	2.00		
400	3.00		
500	4.00		
600	5.00		
700	6.00		
800	7.00	$2,499 max.	$24.00

Value Limit (212.1)
The maximum value of a GXG shipment to this country is $2,499 or a lesser amount if limited by content or value.

Size Limits (211.22)
The surface area of the address side of the item to be mailed must be large enough to completely contain the Global Express Guaranteed Air Waybill/Shipping Invoice (shipping label), postage, endorsement, and any applicable markings. The shipping label is approximately 5.5 inches high and 9.5 inches long.
Maximum length: 46 inches
Maximum width: 35 inches
Maximum height: 46 inches
Maximum length and girth combined: 108 inches

General Conditions for Mailing
See Publication 141, *Global Express Guaranteed Service Guide,* for information about areas served in the destination country, allowable contents, packaging and labeling requirements, tracking and tracing, service standards, and other conditions for mailing.

Express Mail International (220) Price Group 7

Refer to Notice 123, *Price List*, for the applicable retail, commercial base, or commercial plus price.
Weight Limit: 66 lbs.

Express Mail International — Flat Rate Envelope and Flat Rate Boxes
The maximum weight for the Express Mail International Flat Rate Envelope and the Express Mail International Flat Rate Boxes is 20 pounds. Refer to Notice 123, *Price List*, for the applicable retail, commercial base, or commercial plus price.

Insurance (222.8)
Available for **Express Mail International merchandise shipments** only

Insured Amount not over	Fee	Insured Amount not over	Fee
$100	No Fee	For insurance coverage above $2,000, add $1.50 for each $500 or fraction thereof, up to a maximum of $5,000 per shipment.	
200	$0.85		
500	2.35		
1,000	3.85		
1,500	5.35		
2,000	6.85	$5,000 max.	$15.85

Articles Admitted	Required Customs Form/Endorsement
Correspondence and business papers.	PS Form 2976, Customs — *CN 22 and Sender's Declaration*. Endorse item clearly next to mailing label as BUSINESS PAPERS.
Merchandise samples without commercial value.	PS Form 2976, Customs — *CN 22 and Sender's Declaration*.
Merchandise and all articles subject to customs duty.	PS Form 2976-A, *Customs Declaration and Dispatch Note CP 72,* inside a PS Form 2976-E, *Customs Declaration Envelope CP 91.*

Size Limits (221.52)
Maximum length: 36 inches
Maximum length and girth combined: 79 inches

Note:
Coins; banknotes; currency notes, including paper money; securities of any kind payable to bearer; traveler's checks; platinum, gold, and silver; precious stones; jewelry; watches; and other valuable articles are prohibited in Express Mail International shipments to Burundi.

Reciprocal Service Name: EMS Datapost

Country Code: BI

Areas Served:
Express Mail International is available ***only*** to the following location: Bujumbura.

Priority Mail International (230) Price Group 7

Refer to Notice 123, *Price List*, for the applicable retail, commercial base, or commercial plus price.
Weight Limit: 66 lbs.

Note: *Ordinary Priority Mail International includes indemnity at no cost based on weight. (See 230.)*

Priority Mail International — Flat Rate

Flat Rate Envelopes or Small Flat Rate Priced Boxes: The maximum weight is 4 pounds. Refer to Notice 123, *Price List*, for the applicable retail, commercial base, or commercial plus price.

Flat Rate Boxes — Medium and Large: The maximum weight is 20 pounds, or the limit set by the individual country, whichever is less. Refer to Notice 123, *Price List*, for the retail, commercial base, or commercial plus price.

Insurance (232.92)

Available for **Priority Mail International merchandise parcels** only (see 323.72 for markings)

Insured Amount not over	Fee	Insured Amount not over	Fee
$50	$2.45	Add $1.15 for each additional $100 or fraction of insurance coverage.	
100	3.60		
200	4.75		
300	5.90		
400	7.05		
500	8.20	$5,000 max.	$59.95

Size Limits (231.22)

Maximum length: 42 inches
Maximum length and girth combined: 79 inches

First-Class Mail International (240) Price Group 7

For the prices and maximum weights for letters, large envelopes (flats), packages (small packets), and postcards, see Notice 123, *Price List*.

Size Limits

Letters: See 241.212
Postcards: See 241.221
Large Envelopes (Flats): See 241.232
Packages (Small Packets): See 241.242 and 241.243

Airmail M-bags (260) — Direct Sack to One Addressee Price Group 7

Refer to Notice 123, *Price List*, for the applicable retail, commercial base, or commercial plus price.
Weight Limit: 66 lbs.

Matter for the Blind (270)

Free when sent as First-Class Mail International, including Priority Mail International Flat Rate Envelopes and Small Flat Rate Priced Boxes. Weight limit: 4 pounds.
Free when sent as Priority Mail International. Weight limit: 15 pounds.

Extra Services

Certificate of Mailing (313)

Individual Pieces	Fee
Individual article (PS Form 3817)	$1.15
Firm mailing books (PS Form 3877), per article listed (minimum 3)	0.44
Duplicate copy of PS Form 3817 or PS Form 3877 (per page)	1.15
Bulk Quantities	**Fee**
First 1,000 pieces (or fraction thereof)	$6.70
Each additional 1,000 pieces (or fraction thereof)	0.80
Duplicate copy of PS Form 3606	1.15

COD and Certified

NOT for International Mail

International Business Reply Service (382)

Fee: Envelopes up to 2 ounces $1.50; Cards $1.00

International Postal Money Order (371)

NOT Available

International Reply Coupons (381)

Fee: $2.20

Registered Mail (330)

Fee: $11.75

Maximum Indemnity: $47.33
Available for First-Class Mail International, including postcards and Flat Rate Envelopes and Small Flat Rate Priced Boxes, and matter for the blind or other physically handicapped persons. Not applicable to M-bags.

Restricted Delivery (350)

NOT Available

Return Receipt (340)

Fee: $2.35

Available for registered mail and insured Priority Mail International parcels only.

Cambodia
(Kampuchea)

Country Conditions for Mailing

Prohibitions (130)
Coins; banknotes; currency notes (paper money); securities payable to bearer; traveler's checks; manufactured and unmanufactured platinum, gold, silver; precious stones; jewels; expensive jewelry; and other valuable articles.
Radioactive materials.

Restrictions
None

Observations
First-Class Mail International items may not contain dutiable articles.

Customs Forms Required (123)
First-Class Mail International items and Priority Mail International Flat Rate Envelopes and Small Flat Rate Priced Boxes:
PS Form 2976 (see 123.61)
Priority Mail International parcels:
PS Form 2976-A inside 2976-E (envelope)

Global Express Guaranteed (210) Price Group 8

Refer to Notice 123, *Price List*, for the applicable retail, commercial base, or commercial plus price.

Weight Limit: 70 lbs.

Insurance (212.5)

Insured Amount not over	Fee	Insured Amount not over	Fee
$100	No Fee	For document reconstruction insurance or non-document insurance coverage above $800, add $1.00 per $100 or fraction thereof, up to a maximum of $2,499 per shipment.	
200	$1.00		
300	2.00		
400	3.00		
500	4.00		
600	5.00		
700	6.00		
800	7.00	$2,499 max.	$24.00

Value Limit (212.1)
The maximum value of a GXG shipment to this country is $2,499 or a lesser amount if limited by content or value.

Size Limits (211.22)
The surface area of the address side of the item to be mailed must be large enough to completely contain the Global Express Guaranteed Air Waybill/Shipping Invoice (shipping label), postage, endorsement, and any applicable markings. The shipping label is approximately 5.5 inches high and 9.5 inches long.
Maximum length: 46 inches
Maximum width: 35 inches
Maximum height: 46 inches
Maximum length and girth combined: 108 inches

General Conditions for Mailing
See Publication 141, *Global Express Guaranteed Service Guide,* for information about areas served in the destination country, allowable contents, packaging and labeling requirements, tracking and tracing, service standards, and other conditions for mailing.

Express Mail International (220) Price Group 6

Refer to Notice 123, *Price List*, for the applicable retail, commercial base, or commercial plus price.

Weight Limit: 66 lbs.

Express Mail International — Flat Rate Envelope and Flat Rate Boxes

The maximum weight for the Express Mail International Flat Rate Envelope and the Express Mail International Flat Rate Boxes is 20 pounds. Refer to Notice 123, *Price List*, for the applicable retail, commercial base, or commercial plus price.

Insurance (222.8)
Available for **Express Mail International merchandise shipments** only

Insured Amount not over	Fee	Insured Amount not over	Fee
$100	No Fee	For insurance coverage above $2,000, add $1.50 for each $500 or fraction thereof, up to a maximum of $5,000 per shipment.	
200	$0.85		
500	2.35		
1,000	3.85		
1,500	5.35		
2,000	6.85	$5,000 max.	$15.85

Articles Admitted	Required Customs Form/Endorsement
Correspondence and business papers.	PS Form 2976, *Customs — CN 22 and Sender's Declaration.* Endorse item clearly next to mailing label as BUSINESS PAPERS.
Merchandise samples without commercial value and not subject to customs duty.	PS Form 2976, *Customs — CN 22 and Sender's Declaration.*
Merchandise and all articles subject to customs duty.	PS Form 2976-A, *Customs Declaration and Dispatch Note CP 72,* inside a PS Form 2976-E, *Customs Declaration Envelope CP 91.* Include a commercial invoice in each item.

Size Limits (221.52)
Maximum length: 36 inches
Maximum length and girth combined: 79 inches

Note:
Coins; banknotes; currency notes, including paper money; securities of any kind payable to bearer; traveler's checks; platinum, gold, and silver; precious stones; jewelry; watches; and other valuable articles are prohibited in Express Mail International shipments to Cambodia.

Reciprocal Service Name: EMS

Country Code: KH

Areas Served: Only to addresses in Phnom Penh

Priority Mail International (230) Price Group 6

Refer to Notice 123, *Price List*, for the applicable retail, commercial base, or commercial plus price.
Weight Limit: 66 lbs.

Note: *Ordinary Priority Mail International includes indemnity at no cost based on weight. (See 230.)*

Priority Mail International — Flat Rate

Flat Rate Envelopes or Small Flat Rate Priced Boxes: The maximum weight is 4 pounds. Refer to Notice 123, *Price List*, for the applicable retail, commercial base, or commercial plus price.

Flat Rate Boxes — Medium and Large: The maximum weight is 20 pounds, or the limit set by the individual country, whichever is less. Refer to Notice 123, *Price List*, for the retail, commercial base, or commercial plus price.

Insurance (232.92) NOT Available

Size Limits (231.22)

Maximum length: 42 inches
Maximum length and girth combined: 79 inches

First-Class Mail International (240) Price Group 6

For the prices and maximum weights for letters, large envelopes (flats), packages (small packets), and postcards, see Notice 123, *Price List*.

Size Limits

Letters: See 241.212
Postcards: See 241.221
Large Envelopes (Flats): See 241.232
Packages (Small Packets): See 241.242 and 241.243

Airmail M-bags (260) — Direct Sack to One Addressee Price Group 6

Refer to Notice 123, *Price List*, for the applicable retail, commercial base, or commercial plus price.
Weight Limit: 66 lbs.

Matter for the Blind (270)

Free when sent as First-Class Mail International, including Priority Mail International Flat Rate Envelopes and Small Flat Rate Priced Boxes. Weight limit: 4 pounds.
Free when sent as Priority Mail International. Weight limit: 15 pounds.

Extra Services

Certificate of Mailing (313)

Individual Pieces	Fee
Individual article (PS Form 3817)	$1.15
Firm mailing books (PS Form 3877), per article listed (minimum 3)	0.44
Duplicate copy of PS Form 3817 or PS Form 3877 (per page)	1.15
Bulk Quantities	**Fee**
First 1,000 pieces (or fraction thereof)	$6.70
Each additional 1,000 pieces (or fraction thereof)	0.80
Duplicate copy of PS Form 3606	1.15

COD and Certified **NOT** for International Mail

International Business Reply Service (382)

Fee: Envelopes up to 2 ounces $1.50; Cards $1.00

International Postal Money Order (371)

NOT Available

International Reply Coupons (381) **Fee:** $2.20

Registered Mail (330) **Fee:** $11.75

Maximum Indemnity: $47.33
Available for First-Class Mail International, including postcards and Flat Rate Envelopes and Small Flat Rate Priced Boxes, and matter for the blind or other physically handicapped persons. Not applicable to M-bags.

Restricted Delivery (350) NOT Available

Return Receipt (340) **Fee:** $2.35

Available for registered mail only.

Cameroon

Country Conditions for Mailing

Prohibitions (130)
Coins; gold; jewelry; platinum; precious stones; and silver.
Radioactive materials.
Used clothing.

Restrictions
Banknotes; currency notes; and securities payable to bearer may be sent only in registered shipments.

Observations
None

Customs Forms Required (123)
First-Class Mail International items and Priority Mail International Flat Rate Envelopes and Small Flat Rate Priced Boxes:
PS Form 2976 (see 123.61)
Priority Mail International parcels:
PS Form 2976-A inside 2976-E (envelope)

Global Express Guaranteed (210) Price Group 4

Refer to Notice 123, *Price List*, for the applicable retail, commercial base, or commercial plus price.
Weight Limit: 70 lbs.

Insurance (212.5)

Insured Amount not over	Fee	Insured Amount not over	Fee
$100	No Fee	For document reconstruction insurance or non-document insurance coverage above $800, add $1.00 per $100 or fraction thereof, up to a maximum of $2,499 per shipment.	
200	$1.00		
300	2.00		
400	3.00		
500	4.00		
600	5.00		
700	6.00		
800	7.00	$2,499 max.	$24.00

Value Limit (212.1)
The maximum value of a GXG shipment to this country is $2,499 or a lesser amount if limited by content or value.

Size Limits (211.22)
The surface area of the address side of the item to be mailed must be large enough to completely contain the Global Express Guaranteed Air Waybill/Shipping Invoice (shipping label), postage, endorsement, and any applicable markings. The shipping label is approximately 5.5 inches high and 9.5 inches long.
Maximum length: 46 inches
Maximum width: 35 inches
Maximum height: 46 inches
Maximum length and girth combined: 108 inches

General Conditions for Mailing
See Publication 141, *Global Express Guaranteed Service Guide,* for information about areas served in the destination country, allowable contents, packaging and labeling requirements, tracking and tracing, service standards, and other conditions for mailing.

Express Mail International (220) Price Group 7

Refer to Notice 123, *Price List*, for the applicable retail, commercial base, or commercial plus price.
Weight Limit: 44 lbs.

Express Mail International — Flat Rate Envelope and Flat Rate Boxes
The maximum weight for the Express Mail International Flat Rate Envelope and the Express Mail International Flat Rate Boxes is 20 pounds. Refer to Notice 123, *Price List*, for the applicable retail, commercial base, or commercial plus price.

Insurance (222.8)
Available for **Express Mail International merchandise shipments** only

Insured Amount not over	Fee	Insured Amount not over	Fee
$100	No Fee	For insurance coverage above $2,000, add $1.50 for each $500 or fraction thereof, up to a maximum of $5,000 per shipment.	
200	$0.85		
500	2.35		
1,000	3.85		
1,500	5.35		
2,000	6.85	$5,000 max.	$15.85

Articles Admitted	Required Customs Form/Endorsement
Correspondence and business papers.	PS Form 2976, *Customs — CN 22 and Sender's Declaration.* Endorse item clearly next to mailing label as BUSINESS PAPERS.
Merchandise samples without commercial value.	PS Form 2976, *Customs — CN 22 and Sender's Declaration.*
Merchandise and all articles subject to customs duty.	PS Form 2976-A, *Customs Declaration and Dispatch Note CP 72,* inside a PS Form 2976-E, *Customs Declaration Envelope CP 91.* Commercial shipments must be accompanied by two copies of the invoice.

Size Limits (221.52)
Maximum length: 36 inches
Maximum length and girth combined: 79 inches

Note:
Coins; banknotes; currency notes, including paper money; securities of any kind payable to bearer; traveler's checks; platinum, gold, and silver; precious stones; jewelry; watches; and other valuable articles are prohibited in Express Mail International shipments to Cameroon.

Reciprocal Service Name: EMS Courrier Service Express

Country Code: CM

Areas Served:
Express Mail International is available only to the following locations:
Bafoussam
Bamenda
Douala
Garoua
Maroua
Ngaoundere
Yaounde

Priority Mail International (230) Price Group 7

Refer to Notice 123, *Price List*, for the applicable retail, commercial base, or commercial plus price.
Weight Limit: 66 lbs.

Note: *Ordinary Priority Mail International includes indemnity at no cost based on weight. (See 230.)*

Priority Mail International — Flat Rate

Flat Rate Envelopes or Small Flat Rate Priced Boxes: The maximum weight is 4 pounds. Refer to Notice 123, *Price List*, for the applicable retail, commercial base, or commercial plus price.

Flat Rate Boxes — Medium and Large: The maximum weight is 20 pounds, or the limit set by the individual country, whichever is less. Refer to Notice 123, *Price List*, for the retail, commercial base, or commercial plus price.

Insurance (232.92)

Available for **Priority Mail International merchandise parcels** only (see 323.72 for markings)

Insured Amount not over	Fee	Insured Amount not over	Fee
$50	$2.45		
100	3.60	Add $1.15 for each additional $100 or fraction of insurance coverage.	
200	4.75		
300	5.90		
400	7.05		
500	8.20	$5,000 max.	$59.95

Size Limits (231.22)

Maximum length: 42 inches
Maximum length and girth combined: 79 inches

First-Class Mail International (240) Price Group 7

For the prices and maximum weights for letters, large envelopes (flats), packages (small packets), and postcards, see Notice 123, *Price List*.

Size Limits

Letters: See 241.212
Postcards: See 241.221
Large Envelopes (Flats): See 241.232
Packages (Small Packets): See 241.242 and 241.243

Airmail M-bags (260) — Direct Sack to One Addressee Price Group 7

Refer to Notice 123, *Price List*, for the applicable retail, commercial base, or commercial plus price.
Weight Limit: 66 lbs.

Matter for the Blind (270) NOT Available

Extra Services

Certificate of Mailing (313)

Individual Pieces	Fee
Individual article (PS Form 3817)	$1.15
Firm mailing books (PS Form 3877), per article listed (minimum 3)	0.44
Duplicate copy of PS Form 3817 or PS Form 3877 (per page)	1.15
Bulk Quantities	**Fee**
First 1,000 pieces (or fraction thereof)	$6.70
Each additional 1,000 pieces (or fraction thereof)	0.80
Duplicate copy of PS Form 3606	1.15

COD and Certified **NOT** for International Mail

International Business Reply Service (382)

Fee: Envelopes up to 2 ounces $1.50; Cards $1.00

International Postal Money Order (371)

NOT Available

International Reply Coupons (381) **Fee:** $2.20

Registered Mail (330) **Fee:** $11.75

Maximum Indemnity: $47.33
Available for First-Class Mail International, including postcards and Flat Rate Envelopes and Small Flat Rate Priced Boxes, and matter for the blind or other physically handicapped persons. Not applicable to M-bags.

Restricted Delivery (350) **Fee:** $4.55

Available for registered mail with a return receipt.
Endorsements: A remettre en main propre.

Return Receipt (340) **Fee:** $2.35

Available for registered mail and insured Priority Mail International parcels only.

Canada

Country Conditions for Mailing

Prohibitions (130)

An issue of a publication in which more than 5 percent of its total advertising space is primarily directed to a Canadian market and which indicates:
a. Specifically where goods or services may be obtained in Canada, or
b. Specific items or conditions relating to the sale or provision of goods or services in Canada.

All alcoholic beverages including wines, etc.

An issue of a publication that contains an advertisement primarily directed to a Canadian market is a prohibited import if that advertisement does not appear in identical form in all editions of the issue distributed in the country of origin.

Articles so marked as to create the false impression that they were made in Canada, Great Britain or any other British country.

Commercial tags of metal.

Firearms, except as follows: Firearms may be mailed to Canada provided that they meet the requirements in DMM 601.12.1, 601.12.2, and 601.12.3 and that the importer has the required documentation. Customers must visit *http://cbsa-asfc.gc.ca/publications/pub/bsf5044-eng.html* prior to mailing for Canadian import requirements.

Gold bullion, gold dust, and nonmanufactured precious metals.

Non-refillable lighters or any other lighter that contains fuel. New lighters with no fuel may be sent.

Oleomargarine and other butter substitutes, including altered or renovated butter.

Perishable infectious biological substances.

Perishable noninfectious biological substances.

Plumage and skins of wild birds.

Prison-made goods being sold or intended for sale by a person or firm.

Radioactive materials.

Replica or inert munitions, as well as other devices that simulate explosive devices or munitions, including replica or inert grenades or other simulated military munitions, whether or not such items are for display purposes.

Reprints of Canadian or British works copyrighted in Canada.

Reproductions of Canadian postage stamps unless printed in publications in black and white only and with a defacing line drawn across each reproduction.

Shipments bearing caution labels indicating the contents are flammable.

Smoke-making devices for motor vehicles and boats.

Used or secondhand hives or bee supplies.

Restrictions

Coins; banknotes; currency notes; securities payable to bearer; traveler's checks; gold, silver, platinum, manufactured or not; jewelry; and other valuable articles may be sent only in registered items.
Exceptions:
Coins sent to or from collectors or dealers may be mailed in ordinary (uninsured) parcels.

Drugs and medicines must comply with Canadian law.

Eggs for hatching must be packed in new, clean containers and accompanied by a certificate issued by a veterinarian of the U.S. Department of Agriculture, or one issued by a State veterinarian and endorsed by a veterinarian of that Bureau, stating that to the best of his or her knowledge the eggs come from a flock that is free from Newcastle disease, fowl pest, or fowl typhoid. See 135.3 for method of packing.

Meat and meat food products must be accompanied by an export certificate issued by the U.S. Department of Agriculture and labeled in accordance with Canadian regulations. Exception to these requirements are:
(1) bona fide sample shipments weighing less than 10 kg;
(2) meat products addressed to a government department or agency;
(3) meat products intended for personal consumption when they enter Canada in the possession of the importer.

Precious stones, set or not set; all items used as dress ornaments and coming under the term "jewelry" including articles of gold or other precious metal for personal use such as cigarette holders, cases, powder cases, card cases, opera glasses, fountain pens, watches, etc., are permitted in insured parcels provided the articles have value not over $5 U.S. A parcel containing a number of such articles valued at $5 or less may be insured for the total value of the contents up to a maximum of $200.

Veterinary biological products including serums and vaccines must be accompanied by a permit issued by the Veterinary Director General, Ministry of Agriculture of Canada.

Observations

1. Banknotes valued at $100 or more must be put up in a compact package and securely tied with strong twine before wrapping. The wrapper must be linen or other strong, woven material, linen lined paper, or two thicknesses of strong kraft paper. After wrapping, the package must be again securely tied or stitched and sealed at the points of closing.
2. The name of the Canadian province in which the office of destination is located must appear as part of the address.
3. The following must not be accepted for insurance:
   Bees, postage stamps (canceled and uncanceled) and albums in which they are mounted, and parcels addressed to CFPOs.
4. Canadian Forces Mail (CFPO) is processed through Canadian military post offices and must be addressed in the following manner:
   a. NUMBER, RANK, NAME UNIT
   b. CFPO (NUMBER)
   c. BELLEVILLE ON K0K 3R0
   d. CANADA
   Maximum weight limits for mail addressed to members of the Canadian Forces based outside of Canada (CFPO) is 22 pounds. Parcels for CFPO addresses may not be insured. Direct sacks of printed matter (M-bags) are not permitted for CFPO addresses.
5. A letter fully prepaid and bearing the same address as that of a parcel may be tied or otherwise securely attached to the outside of the parcel. Stamps to cover postage on the parcel must be affixed to the wrapper of the parcel. Stamps to pay postage on the letter must be affixed to the envelope thereof.
6. Certain types of merchandise must be marked to show country of origin in the manner prescribed by the Canadian customs regulations.
7. Goods valued under 20 Canadian dollars are duty and excise tax exempt. Goods over 20 Canadian dollars will be subject to the applicable duties and excise taxes. Gift shipments received by mail that are valued under 60 Canadian dollars are duty and excise tax exempt.

8. For all casual and commercial items valued under 1,600 Canadian dollars, Canada Post will collect the assessed duties and excise taxes and a handling fee of 5 Canadian dollars from the addressee. For Express Mail International items, the handling fee is 8 Canadian dollars. All commercial mail items over 1,600 Canadian dollars will be held by Canada Customs and Excise until proper invoice and accounting documentation is provided by the addressee.
9. The Canada Customs Invoice can be obtained from stationery, office supply, or printing companies. If mailers are unable to obtain the Canada Customs Invoice locally, they should visit the following Web site: *www.canadapost.ca*. In addition, commercial invoices are acceptable provided that each invoice has the required information for customs purposes.
10. Information on Canadian customs regulations may be obtained from the Office of International Marketing/223, Bureau of International Commerce, Department of Commerce, Washington, DC 20230, or any field office of that Department.
11. Obtaining post code information:
    a. Information on Canadian post code directories can be obtained from:
       NATIONAL PHILATELIC CENTER
       CANADA POST CORPORATION
       STATION 1
       ANTIGONISH NS B2G 2R8
       Telephone: 1-800-565-4362
       Fax: 1-902-863-6796
    b. To obtain Canadian post codes for specific addresses, call the General Information line at 1-416-979-8822 or access the Canada Post Corporation web site on the Internet at *http://www.canadapost.ca*.
12. Pursuant to the Canada Customs Act and a need to heighten border security, Canada will deny entry of all postal items (except postcards) that do not bear complete sender and addressee information in roman letters and arabic numerals.

Customs Forms Required (123)

First-Class Mail International items and Priority Mail International Flat Rate Envelopes and Small Flat Rate Priced Boxes:
PS Form 2976 (see 123.61)
Priority Mail International parcels:
PS Form 2976-A inside 2976-E (envelope)

Global Express Guaranteed (210) Price Group 1

Refer to Notice 123, *Price List*, for the applicable retail, commercial base, or commercial plus price.
Weight Limit: 70 lbs.

Insurance (212.5)

Insured Amount not over	Fee	Insured Amount not over	Fee
$100	No Fee	For document reconstruction insurance or non-document insurance coverage above $800, add $1.00 per $100 or fraction thereof, up to a maximum of $2,499 per shipment.	
200	$1.00		
300	2.00		
400	3.00		
500	4.00		
600	5.00		
700	6.00		
800	7.00	$2,499 max.	$24.00

Value Limit (212.1)

The maximum value of a GXG shipment to this country is $2,499 or a lesser amount if limited by content or value.

Size Limits (211.22)

The surface area of the address side of the item to be mailed must be large enough to completely contain the Global Express Guaranteed Air Waybill/Shipping Invoice (shipping label), postage, endorsement, and any applicable markings. The shipping label is approximately 5.5 inches high and 9.5 inches long.
Maximum length: 46 inches
Maximum width: 35 inches
Maximum height: 46 inches
Maximum length and girth combined: 108 inches

General Conditions for Mailing

See Publication 141, *Global Express Guaranteed Service Guide,* for information about areas served in the destination country, allowable contents, packaging and labeling requirements, tracking and tracing, service standards, and other conditions for mailing.

Express Mail International (220) Price Group 1

Refer to Notice 123, *Price List*, for the applicable retail, commercial base, or commercial plus price.
Weight Limit: 66 lbs.

Express Mail International — Flat Rate Envelope and Flat Rate Boxes

The maximum weight for the Express Mail International Flat Rate Envelope and the Express Mail International Flat Rate Boxes is 20 pounds. Refer to Notice 123, *Price List*, for the applicable retail, commercial base, or commercial plus price.

Insurance (222.8)

Available for **Express Mail International merchandise shipments** only

Insured Amount not over	Fee	Insured Amount not over	Fee
$100	No Fee	For insurance coverage above $2,000, add $1.50 for each $500 or fraction thereof, up to a maximum of $5,000 per shipment.	
200	$0.85		
500	2.35		
1,000	3.85		
1,500	5.35		
2,000	6.85	$5,000 max.	$15.85

Articles Admitted	Required Customs Form/Endorsement
Business papers and commercial documents.	PS Form 2976, *Customs — CN 22 and Sender's Declaration.*
Merchandise samples and gift shipments (non-commercial parcels).	PS Form 2976-A, *Customs Declaration and Dispatch Note CP 72,* inside a PS Form 2976-E, *Customs Declaration Envelope CP 91.*
Merchandise (commercial shipments) and all articles subject to customs duty.	PS Form 2976-A, *Customs Declaration and Dispatch Note CP 72,* inside a PS Form 2976-E, *Customs Declaration Envelope CP 91.*

Size Limits (221.52)

Maximum length: 42 inches
Maximum length and girth combined: 79 inches

Notes:

1. Gift shipments (non-commercial parcels) require a sales receipt, invoice or other documentation to support the declared value.
2. Coins; banknotes; currency notes, including paper money; securities of any kind payable to bearer; traveler's checks; platinum, gold, and silver; precious stones; jewelry; watches; and other valuable articles are prohibited in Express Mail International shipments to Canada.
3. Express Mail shipments may have a street address or a post office box address. A local telephone number for the addressee MUST be provided for shipments addressed to a post office box address. A local telephone number for the addressee should be provided if possible for shipments to a street address.

Reciprocal Service Name: There is no reciprocal service.

Country Code: CA

Areas Served: All

Priority Mail International (230) Price Group 1

Refer to Notice 123, *Price List*, for the applicable retail, commercial base, or commercial plus price.
Weight Limit: 66 lbs. **Exception: 22 lbs. to Canadian Forces (CFPOs).** **See Observation 4.**

Note: *Ordinary Priority Mail International includes indemnity at no cost based on weight. (See 230.)*

Priority Mail International — Flat Rate

Flat Rate Envelopes or Small Flat Rate Priced Boxes: The maximum weight is 4 pounds. Refer to Notice 123, *Price List*, for the applicable retail, commercial base, or commercial plus price.

Flat Rate Boxes — Medium and Large: The maximum weight is 20 pounds, or the limit set by the individual country, whichever is less. Refer to Notice 123, *Price List*, for the retail, commercial base, or commercial plus price.

Insurance (232.92)

Available for **Priority Mail International merchandise parcels** only (see 323.72 for markings)

Insured Amount not over	**Fee**
$50	$2.45
100	3.60
200	4.75
300	5.90
400	7.05
500	8.20
600	9.35
675 max.	10.50

Size Limits (231.22)

Maximum length: 79 inches
Maximum length and girth combined: 108 inches

First-Class Mail International (240) Price Group 1

For the prices and maximum weights for letters, large envelopes (flats), packages (small packets), and postcards, see Notice 123, *Price List*.

Size Limits

Letters: See 241.212
Postcards: See 241.221
Large Envelopes (Flats): See 241.232
Packages (Small Packets): See 241.242 and 241.243

Airmail M-bags (260) — Direct Sack to One Addressee Price Group 1

Refer to Notice 123, *Price List*, for the applicable retail, commercial base, or commercial plus price.
Weight Limit: 66 lbs.

Matter for the Blind (270)

Free when sent as First-Class Mail International, including Priority Mail International Flat Rate Envelopes and Small Flat Rate Priced Boxes. Weight limit: 4 pounds.
Free when sent as Priority Mail International. Weight limit: 15 pounds.

Extra Services

Certificate of Mailing (313)

Individual Pieces	**Fee**
Individual article (PS Form 3817)	$1.15
Firm mailing books (PS Form 3877), per article listed (minimum 3)	0.44
Duplicate copy of PS Form 3817 or PS Form 3877 (per page)	1.15
Bulk Quantities	**Fee**
First 1,000 pieces (or fraction thereof)	$6.70
Each additional 1,000 pieces (or fraction thereof)	0.80
Duplicate copy of PS Form 3606	1.15

COD and Certified

NOT for International Mail

International Business Reply Service (382)

Fee: Envelopes up to 2 ounces $1.50; Cards $1.00

International Postal Money Order (371)

Use MO Form MP1
Maximum Amount Available: $700 **Fee:** $4.45
Money Order Inquiry: **Fee:** $5.50

International Reply Coupons (381) **Fee:** $2.20

Registered Mail (330) **Fee:** $11.75

Maximum Indemnity: $47.33
Available for First-Class Mail International, including postcards and Flat Rate Envelopes and Small Flat Rate Priced Boxes, and matter for the blind or other physically handicapped persons. Not applicable to M-bags.

Restricted Delivery (350) NOT Available

Return Receipt (340) **Fee:** $2.35

Available for registered mail and insured Priority Mail International parcels only.

Cape Verde

Country Conditions for Mailing

Prohibitions (130)

Coins; banknotes; currency notes (paper money); securities of any kind payable to bearer; traveler's checks; platinum, gold, and silver (manufactured or not); precious stones; jewelry and other valuable articles.
Medicines and pharmaceutical drugs unless authorized by the Ministry of Health.
Perishable infectious biological substances.
Radioactive materials.

Restrictions

Fresh and frozen fruit; fats and vegetable oils, except olive oil; tinned meat; fish and preserved fish; and salt require authorization by the Cape Verde Secretary of State for Commerce.

Observations

None

Customs Forms Required (123)

First-Class Mail International items and Priority Mail International Flat Rate Envelopes and Small Flat Rate Priced Boxes:
PS Form 2976 (see 123.61)
Priority Mail International parcels:
PS Form 2976-A inside 2976-E (envelope)

Global Express Guaranteed (210) Price Group 4

Refer to Notice 123, *Price List*, for the applicable retail, commercial base, or commercial plus price.
Weight Limit: 70 lbs.

Insurance (212.5)

Insured Amount not over	Fee	Insured Amount not over	Fee
$100	No Fee	For document reconstruction insurance or non-document insurance coverage above $800, add $1.00 per $100 or fraction thereof, up to a maximum of $1,000 per shipment.	
200	$1.00		
300	2.00		
400	3.00		
500	4.00		
600	5.00		
700	6.00		
800	7.00	$1,000 max.	$9.00

Value Limit (212.1)

The maximum value of a GXG shipment to Cape Verde is $1,000 or a lesser amount if limited by content or value.

Size Limits (211.22)

The surface area of the address side of the item to be mailed must be large enough to completely contain the Global Express Guaranteed Air Waybill/Shipping Invoice (shipping label), postage, endorsement, and any applicable markings. The shipping label is approximately 5.5 inches high and 9.5 inches long.
Maximum length: 46 inches
Maximum width: 35 inches
Maximum height: 46 inches
Maximum length and girth combined: 108 inches

General Conditions for Mailing

See Publication 141, *Global Express Guaranteed Service Guide,* for information about areas served in the destination country, allowable contents, packaging and labeling requirements, tracking and tracing, service standards, and other conditions for mailing.

Express Mail International (220) Price Group 7

Refer to Notice 123, *Price List*, for the applicable retail, commercial base, or commercial plus price.
Weight Limit: 66 lbs.

Express Mail International — Flat Rate Envelope and Flat Rate Boxes

The maximum weight for the Express Mail International Flat Rate Envelope and the Express Mail International Flat Rate Boxes is 20 pounds. Refer to Notice 123, *Price List*, for the applicable retail, commercial base, or commercial plus price.

Insurance (222.8)

Available for **Express Mail International merchandise shipments** only

Insured Amount not over	Fee	Insured Amount not over	Fee
$100	No Fee	For insurance coverage above $2,000, add $1.50 for each $500 or fraction thereof, up to a maximum of $5,000 per shipment.	
200	$0.85		
500	2.35		
1,000	3.85		
1,500	5.35		
2,000	6.85	$5,000 max.	$15.85

Articles Admitted	Required Customs Form/Endorsement
Correspondence and business papers.	PS Form 2976, *Customs — CN 22 and Sender's Declaration.* Endorse item clearly next to mailing label as BUSINESS PAPERS.
Merchandise samples without commercial value and not subject to customs duty.	PS Form 2976, *Customs — CN 22 and Sender's Declaration.*
Merchandise and all articles subject to customs duty.	PS Form 2976-A, *Customs Declaration and Dispatch Note CP 72,* inside a PS Form 2976-E, *Customs Declaration Envelope CP 91.*A commercial invoice must be included.

Size Limits (221.52)

Maximum length: 36 inches
Maximum length and girth combined: 79 inches

Note:

Coins; banknotes; currency notes, including paper money; securities of any kind payable to bearer; traveler's checks; platinum, gold, and silver; precious stones; jewelry; watches; and other valuable articles are prohibited in Express Mail International shipments to Cape Verde.

Reciprocal Service Name: EMS

Country Code: CV

Areas Served: All

Priority Mail International (230) Price Group 7

Refer to Notice 123, *Price List*, for the applicable retail, commercial base, or commercial plus price.
Weight Limit: 44 lbs.

Note: *Ordinary Priority Mail International includes indemnity at no cost based on weight. (See 230.)*

Priority Mail International — Flat Rate

Flat Rate Envelopes or Small Flat Rate Priced Boxes: The maximum weight is 4 pounds. Refer to Notice 123, *Price List*, for the applicable retail, commercial base, or commercial plus price.

Flat Rate Boxes — Medium and Large: The maximum weight is 20 pounds, or the limit set by the individual country, whichever is less. Refer to Notice 123, *Price List*, for the retail, commercial base, or commercial plus price.

Insurance (232.92) NOT Available

Size Limits (231.22)

Maximum length: 42 inches
Maximum length and girth combined: 79 inches

First-Class Mail International (240) Price Group 7

For the prices and maximum weights for letters, large envelopes (flats), packages (small packets), and postcards, see Notice 123, *Price List*.

Size Limits

Letters: See 241.212
Postcards: See 241.221
Large Envelopes (Flats): See 241.232
Packages (Small Packets): See 241.242 and 241.243

Airmail M-bags (260) — Direct Sack to One Addressee Price Group 7

Refer to Notice 123, *Price List*, for the applicable retail, commercial base, or commercial plus price.
Weight Limit: 66 lbs.

Matter for the Blind (270)

Free when sent as First-Class Mail International, including Priority Mail International Flat Rate Envelopes and Small Flat Rate Priced Boxes. Weight limit: 4 pounds.
Free when sent as Priority Mail International. Weight limit: 15 pounds.

Extra Services

Certificate of Mailing (313)

Individual Pieces	Fee
Individual article (PS Form 3817)	$1.15
Firm mailing books (PS Form 3877), per article listed (minimum 3)	0.44
Duplicate copy of PS Form 3817 or PS Form 3877 (per page)	1.15
Bulk Quantities	**Fee**
First 1,000 pieces (or fraction thereof)	$6.70
Each additional 1,000 pieces (or fraction thereof)	0.80
Duplicate copy of PS Form 3606	1.15

COD and Certified **NOT** for International Mail

International Business Reply Service (382)

Fee: Envelopes up to 2 ounces $1.50; Cards $1.00

International Postal Money Order (371)

Use MO Form MP1
Maximum Amount Available: $700 **Fee:** $4.45
Money Order Inquiry: **Fee:** $5.50

International Reply Coupons (381) **Fee:** $2.20

Registered Mail (330) **Fee:** $11.75

Maximum Indemnity: $47.33
Available for First-Class Mail International, including postcards and Flat Rate Envelopes and Small Flat Rate Priced Boxes, and matter for the blind or other physically handicapped persons. Not applicable to M-bags.

Restricted Delivery (350) **Fee:** $4.55

Available for registered mail with a return receipt.
Endorsements: A remettre en main propre.

Return Receipt (340) **Fee:** $2.35

Available for registered mail only.

Cayman Islands

Country Conditions for Mailing

Prohibitions (130)
Same as Jamaica.

Restrictions
Same as Jamaica.

Observations
Many types of merchandise require an import permit, which the addressee must obtain.
Senders must be assured that the addressee has such a permit or can obtain one if needed.

Customs Forms Required (123)
First-Class Mail International items and Priority Mail International Flat Rate Envelopes and Small Flat Rate Priced Boxes:
PS Form 2976 (see 123.61)
Priority Mail International parcels:
PS Form 2976-A inside 2976-E (envelope)

Global Express Guaranteed (210) Price Group 7

Refer to Notice 123, *Price List*, for the applicable retail, commercial base, or commercial plus price.
Weight Limit: 70 lbs.

Insurance (212.5)

Insured Amount not over	Fee	Insured Amount not over	Fee
$100	No Fee	For document reconstruction insurance or non-document insurance coverage above $800, add $1.00 per $100 or fraction thereof, up to a maximum of $2,499 per shipment.	
200	$1.00		
300	2.00		
400	3.00		
500	4.00		
600	5.00		
700	6.00		
800	7.00	$2,499 max.	$24.00

Value Limit (212.1)
The maximum value of a GXG shipment to this country is $2,499 or a lesser amount if limited by content or value.

Size Limits (211.22)
The surface area of the address side of the item to be mailed must be large enough to completely contain the Global Express Guaranteed Air Waybill/Shipping Invoice (shipping label), postage, endorsement, and any applicable markings. The shipping label is approximately 5.5 inches high and 9.5 inches long.
Maximum length: 46 inches
Maximum width: 35 inches
Maximum height: 46 inches
Maximum length and girth combined: 108 inches

General Conditions for Mailing
See Publication 141, *Global Express Guaranteed Service Guide,* for information about areas served in the destination country, allowable contents, packaging and labeling requirements, tracking and tracing, service standards, and other conditions for mailing.

Express Mail International (220) Price Group 9

Refer to Notice 123, *Price List*, for the applicable retail, commercial base, or commercial plus price.
Weight Limit: 44 lbs.

Express Mail International — Flat Rate Envelope and Flat Rate Boxes
The maximum weight for the Express Mail International Flat Rate Envelope and the Express Mail International Flat Rate Boxes is 20 pounds. Refer to Notice 123, *Price List*, for the applicable retail, commercial base, or commercial plus price.

Insurance (222.8)
Available for **Express Mail International merchandise shipments** only

Insured Amount not over	Fee	Insured Amount not over	Fee
$100	No Fee	For insurance coverage above $2,000, add $1.50 for each $500 or fraction thereof, up to a maximum of $5,000 per shipment.	
200	$0.85		
500	2.35		
1,000	3.85		
1,500	5.35		
2,000	6.85	$5,000 max.	$15.85

Articles Admitted	Required Customs Form/Endorsement
Correspondence, business papers, and computer data.	PS Form 2976, *Customs — CN 22 and Sender's Declaration.*
Merchandise samples without commercial value.	PS Form 2976, *Customs — CN 22 and Sender's Declaration.*
Merchandise and all articles subject to customs duty.	PS Form 2976-A, *Customs Declaration and Dispatch Note CP 72,* inside a PS Form 2976-E, *Customs Declaration Envelope CP 91.*

Size Limits (221.52)
Maximum length: 36 inches
Maximum length and girth combined: 79 inches

Notes:
1. Mailers must address Express Mail International shipments to a post office box. There is no house delivery of Express Mail International. To facilitate delivery, mailers should include the telephone number of the addressee on the address label.
2. Coins; banknotes; currency notes, including paper money; securities of any kind payable to bearer; traveler's checks; platinum, gold, and silver; precious stones; jewelry; watches; and other valuable articles are prohibited in Express Mail International shipments to the Cayman Islands.

Reciprocal Service Name: Express Mail Service

Country Code: KY

Areas Served: All

Priority Mail International (230) Price Group 9

Refer to Notice 123, *Price List*, for the applicable retail, commercial base, or commercial plus price.
Weight Limit: 44 lbs.

Note: *Ordinary Priority Mail International includes indemnity at no cost based on weight. (See 230.)*

Priority Mail International — Flat Rate

Flat Rate Envelopes or Small Flat Rate Priced Boxes: The maximum weight is 4 pounds. Refer to Notice 123, *Price List*, for the applicable retail, commercial base, or commercial plus price.

Flat Rate Boxes — Medium and Large: The maximum weight is 20 pounds, or the limit set by the individual country, whichever is less. Refer to Notice 123, *Price List*, for the retail, commercial base, or commercial plus price.

Insurance (232.92) NOT Available

Size Limits (231.22)

Maximum length: 42 inches
Maximum length and girth combined: 79 inches

First-Class Mail International (240) Price Group 9

For the prices and maximum weights for letters, large envelopes (flats), packages (small packets), and postcards, see Notice 123, *Price List*.

Size Limits

Letters: See 241.212
Postcards: See 241.221
Large Envelopes (Flats): See 241.232
Packages (Small Packets): See 241.242 and 241.243

Airmail M-bags (260) — Direct Sack to One Addressee Price Group 9

Refer to Notice 123, *Price List*, for the applicable retail, commercial base, or commercial plus price.
Weight Limit: 66 lbs.

Matter for the Blind (270)

Free when sent as First-Class Mail International, including Priority Mail International Flat Rate Envelopes and Small Flat Rate Priced Boxes. Weight limit: 4 pounds.
Free when sent as Priority Mail International. Weight limit: 15 pounds.

Extra Services

Certificate of Mailing (313)

Individual Pieces	Fee
Individual article (PS Form 3817)	$1.15
Firm mailing books (PS Form 3877), per article listed (minimum 3)	0.44
Duplicate copy of PS Form 3817 or PS Form 3877 (per page)	1.15
Bulk Quantities	**Fee**
First 1,000 pieces (or fraction thereof)	$6.70
Each additional 1,000 pieces (or fraction thereof)	0.80
Duplicate copy of PS Form 3606	1.15

COD and Certified **NOT** for International Mail

International Business Reply Service (382)

Fee: Envelopes up to 2 ounces $1.50; Cards $1.00

International Postal Money Order (371)

NOT Available

International Reply Coupons (381) **Fee:** $2.20

Registered Mail (330) **Fee:** $11.75

Maximum Indemnity: $47.33
Available for First-Class Mail International, including postcards and Flat Rate Envelopes and Small Flat Rate Priced Boxes, and matter for the blind or other physically handicapped persons. Not applicable to M-bags.

Restricted Delivery (350) **Fee:** $4.55

Available for registered mail with a return receipt.
Endorsements: A remettre en main propre.

Return Receipt (340) **Fee:** $2.35

Available for registered mail only.

Central African Republic

Country Conditions for Mailing

Prohibitions (130)

Arms and ammunition.
Coins; currency notes; securities payable to bearer; traveler's checks; manufactured and unmanufactured platinum, gold, and silver; precious stones; jewelry; and other valuable articles.
Pamphlets and leaflets containing propaganda derogatory to the countries of Equatorial Africa.
Perishable infectious biological substances.
Perishable noninfectious biological substances.
Preserved fish, vegetables and plums not clearly marked with the country of origin or contained in tins of more than 1 kg.
Radioactive materials.

Restrictions

Medical or pharmaceutical products, may only be addressed to licensed pharmacists.
Tobacco products are admitted provided the import duties and taxes are paid. The immediate container (box, case or cigarette package) must be marked "Vente en U.D.E." (Sale in Equatorial Customs Union) below the trademark.

Observations

1. First-Class Mail International items may not contain dutiable articles.
2. Postal authorities of Central African Rep. collect domestic postage from addressees for inbound shipments.

Customs Forms Required (123)

First-Class Mail International items and Priority Mail International Flat Rate Envelopes and Small Flat Rate Priced Boxes:
PS Form 2976 (see 123.61)
Priority Mail International parcels:
PS Form 2976-A inside 2976-E (envelope)

Global Express Guaranteed (210)

Not Available

Express Mail International (220) **Price Group 7**

Refer to Notice 123, *Price List*, for the applicable retail, commercial base, or commercial plus price.
Weight Limit: 66 lbs.

Express Mail International — Flat Rate Envelope and Flat Rate Boxes

The maximum weight for the Express Mail International Flat Rate Envelope and the Express Mail International Flat Rate Boxes is 20 pounds. Refer to Notice 123, *Price List*, for the applicable retail, commercial base, or commercial plus price.

Insurance (222.8)

Available for **Express Mail International merchandise shipments** only

Insured Amount not over	Fee	Insured Amount not over	Fee
$100	No Fee	For insurance coverage above $2,000, add $1.50 for each $500 or fraction thereof, up to a maximum of $5,000 per shipment.	
200	$0.85		
500	2.35		
1,000	3.85		
1,500	5.35		
2,000	6.85	$5,000 max.	$15.85

Articles Admitted	Required Customs Form/Endorsement
Correspondence and business papers.	PS Form 2976, *Customs — CN 22 and Sender's Declaration.* Endorse item clearly next to mailing label as BUSINESS PAPERS.
Merchandise samples without commercial value.	PS Form 2976, *Customs — CN 22 and Sender's Declaration.*
Merchandise and all articles subject to customs duty.	PS Form 2976-A, *Customs Declaration and Dispatch Note CP 72,* inside a PS Form 2976-E, *Customs Declaration Envelope CP 91.*

Size Limits (221.52)

Maximum length: 36 inches
Maximum length and girth combined: 79 inches

Note:

Coins; banknotes; currency notes, including paper money; securities of any kind payable to bearer; traveler's checks; platinum, gold, and silver; precious stones; jewelry; watches; and other valuable articles are prohibited in Express Mail International shipments to the Central African Republic.

Reciprocal Service Name: EMS Express Poste Internationale (EPI)

Country Code: CF

Areas Served:

Express Mail International is available ***only*** to the following location:
Bangui

Priority Mail International (230) **Price Group 7**

Refer to Notice 123, *Price List*, for the applicable retail, commercial base, or commercial plus price.
Weight Limit: 66 lbs.

Note: *Ordinary Priority Mail International includes indemnity at no cost based on weight. (See 230.)*

Priority Mail International — Flat Rate

Flat Rate Envelopes or Small Flat Rate Priced Boxes: The maximum weight is 4 pounds. Refer to Notice 123, *Price List*, for the applicable retail, commercial base, or commercial plus price.

Flat Rate Boxes — Medium and Large: The maximum weight is 20 pounds, or the limit set by the individual country, whichever is less. Refer to Notice 123, *Price List*, for the retail, commercial base, or commercial plus price.

Insurance (232.92) NOT Available

Size Limits (231.22)

Maximum length: 42 inches
Maximum length and girth combined: 79 inches

First-Class Mail International (240) Price Group 7

For the prices and maximum weights for letters, large envelopes (flats), packages (small packets), and postcards, see Notice 123, *Price List*.

Size Limits

Letters: See 241.212
Postcards: See 241.221
Large Envelopes (Flats): See 241.232
Packages (Small Packets): See 241.242 and 241.243

Airmail M-bags (260) — Direct Sack to One Addressee Price Group 7

Refer to Notice 123, *Price List*, for the applicable retail, commercial base, or commercial plus price.
Weight Limit: 66 lbs.

Matter for the Blind (270) NOT Available

Extra Services

Certificate of Mailing (313)

Individual Pieces	Fee
Individual article (PS Form 3817)	$1.15
Firm mailing books (PS Form 3877), per article listed (minimum 3)	0.44
Duplicate copy of PS Form 3817 or PS Form 3877 (per page)	1.15
Bulk Quantities	**Fee**
First 1,000 pieces (or fraction thereof)	$6.70
Each additional 1,000 pieces (or fraction thereof)	0.80
Duplicate copy of PS Form 3606	1.15

COD and Certified **NOT** for International Mail

International Business Reply Service (382)

Fee: Envelopes up to 2 ounces $1.50; Cards $1.00

International Postal Money Order (371)

NOT Available

International Reply Coupons (381) **Fee:** $2.20

Registered Mail (330) **Fee:** $11.75

Maximum Indemnity: $47.33
Available for First-Class Mail International, including postcards and Flat Rate Envelopes and Small Flat Rate Priced Boxes, and matter for the blind or other physically handicapped persons. Not applicable to M-bags.

Restricted Delivery (350) **Fee:** $4.55

Available for registered mail with a return receipt.
Endorsements: A remettre en main propre.

Return Receipt (340) **Fee:** $2.35

Available for registered mail only.

Chad

Country Conditions for Mailing

Prohibitions (130)

Arms and ammunition.
Coins; banknotes; currency notes; securities payable to bearer; traveler's checks; manufactured and unmanufactured platinum, gold, and silver; precious stones; jewelry; and other valuable articles.
Pamphlets and leaflets containing propaganda derogatory to the countries of Equatorial Africa.
Perishable infectious biological substances
Preserved fish, vegetables and plums not bearing in large type the mark of origin or contained in tins weighing more than 1 kg.

Restrictions

Medical or pharmaceutical products, may only be addressed to licensed pharmacists.
Tobacco products are subject to import duties and taxes. The immediate container (box, case, cigarette package) must be marked "Vente en U.D.E." (Sale in Equatorial Customs Union) below the trademark.

Observations

Postal authorities of Chad collect domestic postage from addressees for inbound shipments.

Customs Forms Required (123)

First-Class Mail International items and Priority Mail International Flat Rate Envelopes and Small Flat Rate Priced Boxes:
PS Form 2976 (see 123.61)
Priority Mail International parcels:
PS Form 2976-A inside 2976-E (envelope)

Global Express Guaranteed (210) Price Group 4

Refer to Notice 123, *Price List*, for the applicable retail, commercial base, or commercial plus price.

Weight Limit: 70 lbs.

Insurance (212.5)

Insured Amount not over	Fee	Insured Amount not over	Fee
$100	No Fee	For document reconstruction insurance or non-document insurance coverage above $800, add $1.00 per $100 or fraction thereof, up to a maximum of $2,499 per shipment.	
200	$1.00		
300	2.00		
400	3.00		
500	4.00		
600	5.00		
700	6.00		
800	7.00	$2,499 max.	$24.00

Value Limit (212.1)

The maximum value of a GXG shipment to this country is $2,499 or a lesser amount if limited by content or value.

Size Limits (211.22)

The surface area of the address side of the item to be mailed must be large enough to completely contain the Global Express Guaranteed Air Waybill/Shipping Invoice (shipping label), postage, endorsement, and any applicable markings. The shipping label is approximately 5.5 inches high and 9.5 inches long.
Maximum length: 46 inches
Maximum width: 35 inches
Maximum height: 46 inches
Maximum length and girth combined: 108 inches

General Conditions for Mailing

See Publication 141, *Global Express Guaranteed Service Guide,* for information about areas served in the destination country, allowable contents, packaging and labeling requirements, tracking and tracing, service standards, and other conditions for mailing.

Express Mail International (220) Price Group 7

Refer to Notice 123, *Price List*, for the applicable retail, commercial base, or commercial plus price.

Weight Limit: 66 lbs.

Express Mail International — Flat Rate Envelope and Flat Rate Boxes

The maximum weight for the Express Mail International Flat Rate Envelope and the Express Mail International Flat Rate Boxes is 20 pounds. Refer to Notice 123, *Price List*, for the applicable retail, commercial base, or commercial plus price.

Insurance (222.8)

Available for **Express Mail International merchandise shipments** only

Insured Amount not over	Fee	Insured Amount not over	Fee
$100	No Fee	For insurance coverage above $2,000, add $1.50 for each $500 or fraction thereof, up to a maximum of $5,000 per shipment.	
200	$0.85		
500	2.35		
1,000	3.85		
1,500	5.35		
2,000	6.85	$5,000 max.	$15.85

Articles Admitted	Required Customs Form/Endorsement
Correspondence, business papers, and computer data.	PS Form 2976, *Customs — CN 22 and Sender's Declaration.*
Merchandise samples and personal gifts valued below U.S. $105.	PS Form 2976, *Customs — CN 22 and Sender's Declaration.*
Merchandise and all articles subject to customs duty valued over U.S. $105.	PS Form 2976-A, *Customs Declaration and Dispatch Note CP 72,* inside a PS Form 2976-E, *Customs Declaration Envelope CP 91.*

Size Limits (221.52)

Maximum length: 36 inches
Maximum length and girth combined: 79 inches

Note:

Coins; banknotes; currency notes, including paper money; securities of any kind payable to bearer; traveler's checks; platinum, gold, and silver; precious stones; jewelry; watches; and other valuable articles are prohibited in Express Mail International shipments to Chad.

Reciprocal Service Name: EMS Postrapid International

Country Code: TD

Areas Served:
Express Mail International is available ***only*** to the following location:
N'Djamena

Priority Mail International (230) Price Group 7

Refer to Notice 123, *Price List*, for the applicable retail, commercial base, or commercial plus price.
Weight Limit: 44 lbs.

Note: *Ordinary Priority Mail International includes indemnity at no cost based on weight. (See 230.)*

Priority Mail International — Flat Rate
Flat Rate Envelopes or Small Flat Rate Priced Boxes: The maximum weight is 4 pounds. Refer to Notice 123, *Price List*, for the applicable retail, commercial base, or commercial plus price.

Flat Rate Boxes — Medium and Large: The maximum weight is 20 pounds, or the limit set by the individual country, whichever is less. Refer to Notice 123, *Price List*, for the retail, commercial base, or commercial plus price.

Insurance (232.92)
Available for **Priority Mail International merchandise parcels** only (see 323.72 for markings)

Insured Amount not over	Fee
$50	$2.45
100	3.60
185 max.	4.75

Size Limits (231.22)
Maximum length: 42 inches
Maximum length and girth combined: 79 inches

First-Class Mail International (240) Price Group 7
For the prices and maximum weights for letters, large envelopes (flats), packages (small packets), and postcards, see Notice 123, *Price List*.

Size Limits
Letters: See 241.212
Postcards: See 241.221
Large Envelopes (Flats): See 241.232
Packages (Small Packets): See 241.242 and 241.243

Airmail M-bags (260) — Direct Sack to One Addressee Price Group 7

Refer to Notice 123, *Price List*, for the applicable retail, commercial base, or commercial plus price.
Weight Limit: 66 lbs.

Matter for the Blind (270) NOT Available

Extra Services

Certificate of Mailing (313)

Individual Pieces	Fee
Individual article (PS Form 3817)	$1.15
Firm mailing books (PS Form 3877), per article listed (minimum 3)	0.44
Duplicate copy of PS Form 3817 or PS Form 3877 (per page)	1.15
Bulk Quantities	**Fee**
First 1,000 pieces (or fraction thereof)	$6.70
Each additional 1,000 pieces (or fraction thereof)	0.80
Duplicate copy of PS Form 3606	1.15

COD and Certified **NOT** for International Mail

International Business Reply Service (382)
Fee: Envelopes up to 2 ounces $1.50; Cards $1.00

International Postal Money Order (371)
NOT Available

International Reply Coupons (381) **Fee:** $2.20

Registered Mail (330) **Fee:** $11.75
Maximum Indemnity: $47.33
Available for First-Class Mail International, including postcards and Flat Rate Envelopes and Small Flat Rate Priced Boxes, and matter for the blind or other physically handicapped persons. Not applicable to M-bags.

Restricted Delivery (350) NOT Available

Return Receipt (340) **Fee:** $2.35
Available for registered mail and insured Priority Mail International parcels only.

Chile

Country Conditions for Mailing

Prohibitions (130)

Beverages and foodstuffs containing saccharine and similar substances.
Coins; banknotes; currency notes; securities payable to bearer; traveler's checks; manufactured and unmanufactured platinum, gold, and silver; precious stones; jewelry; and other valuable articles.
Perishable infectious biological substances.
Perishable noninfectious biological substances.
Radioactive materials.

Restrictions

No list furnished.

Observations

1. First-Class Mail International items may not contain dutiable articles.
2. Shipments must be accompanied by commercial invoices that bear a declaration of origin in English or Spanish, signed by the mailer, in the following terms:
   "Under oath, we declare that we are the owners (or shippers) of the above mentioned merchandise; that the prices and other details are exact; that the said merchandise is a product of the soil or industry of (country of origin) and that we accept the legal consequences that might arise through any inexactitude contained in this account."
3. Persons desiring to mail shipments should be advised to consult the addressees in advance of mailing to ascertain whether their articles will be admitted.

Customs Forms Required (123)

First-Class Mail International items and Priority Mail International Flat Rate Envelopes and Small Flat Rate Priced Boxes:
PS Form 2976 (see 123.61)
Priority Mail International parcels:
PS Form 2976-A inside 2976-E (envelope)

Global Express Guaranteed (210) Price Group 8

Refer to Notice 123, *Price List*, for the applicable retail, commercial base, or commercial plus price.
Weight Limit: 70 lbs.

Insurance (212.5)

Insured Amount not over	Fee	Insured Amount not over	Fee
$100	No Fee	For document reconstruction insurance or non-document insurance coverage above $800, add $1.00 per $100 or fraction thereof, up to a maximum of $2,499 per shipment.	
200	$1.00		
300	2.00		
400	3.00		
500	4.00		
600	5.00		
700	6.00		
800	7.00	$2,499 max.	$24.00

Value Limit (212.1)

The maximum value of a GXG shipment to this country is $2,499 or a lesser amount if limited by content or value.

Size Limits (211.22)

The surface area of the address side of the item to be mailed must be large enough to completely contain the Global Express Guaranteed Air Waybill/Shipping Invoice (shipping label), postage, endorsement, and any applicable markings. The shipping label is approximately 5.5 inches high and 9.5 inches long.
Maximum length: 46 inches
Maximum width: 35 inches
Maximum height: 46 inches
Maximum length and girth combined: 108 inches

General Conditions for Mailing

See Publication 141, *Global Express Guaranteed Service Guide,* for information about areas served in the destination country, allowable contents, packaging and labeling requirements, tracking and tracing, service standards, and other conditions for mailing.

Express Mail International (220) Price Group 9

Refer to Notice 123, *Price List*, for the applicable retail, commercial base, or commercial plus price.
Weight Limit: 66 lbs.

Express Mail International — Flat Rate Envelope and Flat Rate Boxes

The maximum weight for the Express Mail International Flat Rate Envelope and the Express Mail International Flat Rate Boxes is 20 pounds. Refer to Notice 123, *Price List*, for the applicable retail, commercial base, or commercial plus price.

Insurance (222.8)

Available for **Express Mail International merchandise shipments** only

Insured Amount not over	Fee	Insured Amount not over	Fee
$100	No Fee	For insurance coverage above $2,000, add $1.50 for each $500 or fraction thereof, up to a maximum of $5,000 per shipment.	
200	$0.85		
500	2.35		
1,000	3.85		
1,500	5.35		
2,000	6.85	$5,000 max.	$15.85

Articles Admitted	Required Customs Form/Endorsement
Correspondence, business papers, and computer data.	No form required. Endorse item clearly next to mailing label as BUSINESS PAPERS.
Merchandise samples without commercial value.	PS Form 2976, *Customs — CN 22 and Sender's Declaration.*
Merchandise and all articles subject to customs duty.	PS Form 2976-A, *Customs Declaration and Dispatch Note CP 72,* inside a PS Form 2976-E, *Customs Declaration Envelope CP 91.*

Size Limits (221.52)

Maximum length: 36 inches
Maximum length and girth combined: 79 inches

Note:
Coins; banknotes; currency notes, including paper money; securities of any kind payable to bearer; traveler's checks; platinum, gold, and silver; precious stones; jewelry; watches; and other valuable articles are prohibited in Express Mail International shipments to Chile.

Reciprocal Service Name: CAI

Country Code: CL

Areas Served: All

Priority Mail International (230) Price Group 9

Refer to Notice 123, *Price List*, for the applicable retail, commercial base, or commercial plus price.
Weight Limit: 44 lbs.

Note: *Ordinary Priority Mail International includes indemnity at no cost based on weight. (See 230.)*

Priority Mail International — Flat Rate
Flat Rate Envelopes or Small Flat Rate Priced Boxes: The maximum weight is 4 pounds. Refer to Notice 123, *Price List*, for the applicable retail, commercial base, or commercial plus price.

Flat Rate Boxes — Medium and Large: The maximum weight is 20 pounds, or the limit set by the individual country, whichever is less. Refer to Notice 123, *Price List*, for the retail, commercial base, or commercial plus price.

Insurance (232.92) NOT Available

Size Limits (231.22)
Maximum length: 42 inches
Maximum length and girth combined: 79 inches

First-Class Mail International (240) Price Group 9
For the prices and maximum weights for letters, large envelopes (flats), packages (small packets), and postcards, see Notice 123, *Price List*.

Size Limits
Letters: See 241.212
Postcards: See 241.221
Large Envelopes (Flats): See 241.232
Packages (Small Packets): See 241.242 and 241.243

Airmail M-bags (260) — Direct Sack to One Addressee Price Group 9

Refer to Notice 123, *Price List*, for the applicable retail, commercial base, or commercial plus price.
Weight Limit: 66 lbs.

Matter for the Blind (270)
Free when sent as First-Class Mail International, including Priority Mail International Flat Rate Envelopes and Small Flat Rate Priced Boxes. Weight limit: 4 pounds.
Free when sent as Priority Mail International. Weight limit: 15 pounds.

Extra Services

Certificate of Mailing (313)

Individual Pieces	Fee
Individual article (PS Form 3817)	$1.15
Firm mailing books (PS Form 3877), per article listed (minimum 3)	0.44
Duplicate copy of PS Form 3817 or PS Form 3877 (per page)	1.15
Bulk Quantities	**Fee**
First 1,000 pieces (or fraction thereof)	$6.70
Each additional 1,000 pieces (or fraction thereof)	0.80
Duplicate copy of PS Form 3606	1.15

COD and Certified **NOT** for International Mail

International Business Reply Service (382)
Fee: Envelopes up to 2 ounces $1.50; Cards $1.00

International Postal Money Order (371)
NOT Available

International Reply Coupons (381) **Fee:** $2.20

Registered Mail (330) **Fee:** $11.75
Maximum Indemnity: $47.33
Available for First-Class Mail International, including postcards and Flat Rate Envelopes and Small Flat Rate Priced Boxes, and matter for the blind or other physically handicapped persons. Not applicable to M-bags.

Restricted Delivery (350) **Fee:** $4.55
Available for registered mail with a return receipt.
Endorsements: A remettre en main propre.

Return Receipt (340) **Fee:** $2.35
Available for registered mail only.

China

Country Conditions for Mailing

Prohibitions (130)

Arms, ammunition, weapons.
Articles in hermetically sealed, nontransparent containers.
Chinese currency.
Coins; banknotes; securities payable to bearer; traveler's checks; gold, silver, platinum, manufactured or not; precious stones; jewelry; and other valuable articles, unless sent as an insured post.
Manuscripts, printed matter, photographic negatives, gramophone records, films, magnetic tapes, video tapes, etc., which could do political, economical, cultural, or moral harm to the People's Republic of China.
Meat and meat products.
Perishable infectious biological substances.
Radioactive materials.
Radio receivers, transmitters or receivers of all kinds, walkie-talkies and parts thereof; valves, antennae, etc.
Used clothing and bedding.
Wrist-watches, cameras, television sets, radio sets, tape records, bicycles, sewing machines, and ventilators.

Restrictions

The importation of personal articles is limited to those intended for personal use and imported in reasonable quantities. The value of the items contained in each shipment must not exceed RMB (renminbi) 100 yuan and the total value of the shipment received annually by each family may not exceed RMB (renminbi) 800 yuan. However, the following articles are admitted in the quantities/values indicated:

Description of Articles	Qty. or Value per Item	Comment
1. Pocket electronic calculator	1 per year	The addressee must submit a prior request to Customs.
2. Magnetic tape	5 cassettes	
3. Cotton or synthetic fabric	10-1/4 yd (10 m)	Width must not exceed 50 inches (130 cm).
4. Medicines or materials used in Chinese medicine	RMB 40 yuan	
5. Philatelic stamps	100 stamps	

Observations

Articles that do not meet the requirements mentioned above will be returned to origin or confiscated in accordance with their internal laws.

Customs Forms Required (123)

First-Class Mail International items and Priority Mail International Flat Rate Envelopes and Small Flat Rate Priced Boxes:
PS Form 2976 (see 123.61)
Priority Mail International parcels:
PS Form 2976-A inside 2976-E (envelope)

Global Express Guaranteed (210) Price Group 6

Refer to Notice 123, *Price List*, for the applicable retail, commercial base, or commercial plus price.
Weight Limit: 70 lbs.

Insurance (212.5)

Insured Amount not over	Fee	Insured Amount not over	Fee
$100	No Fee	For document reconstruction insurance or non-document insurance coverage above $800, add $1.00 per $100 or fraction thereof, up to a maximum of $2,499 per shipment.	
200	$1.00		
300	2.00		
400	3.00		
500	4.00		
600	5.00		
700	6.00		
800	7.00	$2,499 max.	$24.00

Value Limit (212.1)

The maximum value of a GXG shipment to this country is $2,499 or a lesser amount if limited by content or value.

Size Limits (211.22)

The surface area of the address side of the item to be mailed must be large enough to completely contain the Global Express Guaranteed Air Waybill/Shipping Invoice (shipping label), postage, endorsement, and any applicable markings. The shipping label is approximately 5.5 inches high and 9.5 inches long.
Maximum length: 46 inches
Maximum width: 35 inches
Maximum height: 46 inches
Maximum length and girth combined: 108 inches

General Conditions for Mailing

See Publication 141, *Global Express Guaranteed Service Guide,* for information about areas served in the destination country, allowable contents, packaging and labeling requirements, tracking and tracing, service standards, and other conditions for mailing.

Express Mail International (220) Price Group 14

Refer to Notice 123, *Price List*, for the applicable retail, commercial base, or commercial plus price.
Weight Limit: 66 lbs.

Express Mail International — Flat Rate Envelope and Flat Rate Boxes

The maximum weight for the Express Mail International Flat Rate Envelope and the Express Mail International Flat Rate Boxes is 20 pounds. Refer to Notice 123, *Price List*, for the applicable retail, commercial base, or commercial plus price.

Insurance (222.8)

Available for **Express Mail International merchandise shipments** only

Insured Amount not over	Fee	Insured Amount not over	Fee
$100	No Fee	For insurance coverage above $2,000, add $1.50 for each $500 or fraction thereof, up to a maximum of $5,000 per shipment.	
200	$0.85		
500	2.35		
1,000	3.85		
1,500	5.35		
2,000	6.85	$5,000 max.	$15.85

Articles Admitted	Required Customs Form/Endorsement
Business correspondence and commercial papers/documents.	No form required. Endorse item clearly next to mailing label as BUSINESS PAPERS.
Merchandise samples without commercial value.	PS Form 2976, *Customs — CN 22 and Sender's Declaration.*
Merchandise and all articles subject to customs duty.	PS Form 2976-A, *Customs Declaration and Dispatch Note CP 72,* inside a PS Form 2976-E, *Customs Declaration Envelope CP 91.*

Size Limits (221.52)
Maximum length: 60 inches
Maximum length and girth combined: 108 inches

Notes:
1. Coins; banknotes; currency notes, including paper money; securities of any kind payable to bearer; traveler's checks; platinum, gold, and silver; precious stones; jewelry; watches; and other valuable articles are prohibited in Express Mail International shipments to China.
2. Express Mail International With Guarantee service — which offers a date-certain, postage-refund guarantee — is available to China.

Country Code: CN

Areas Served: All

Priority Mail International (230) Price Group 14

Refer to Notice 123, *Price List*, for the applicable retail, commercial base, or commercial plus price.
Weight Limit: 66 lbs.

Note: *Ordinary Priority Mail International includes indemnity at no cost based on weight. (See 230.)*

Priority Mail International — Flat Rate
Flat Rate Envelopes or Small Flat Rate Priced Boxes: The maximum weight is 4 pounds. Refer to Notice 123, *Price List*, for the applicable retail, commercial base, or commercial plus price.

Flat Rate Boxes — Medium and Large: The maximum weight is 20 pounds, or the limit set by the individual country, whichever is less. Refer to Notice 123, *Price List*, for the retail, commercial base, or commercial plus price.

Insurance (232.92)
Available for **Priority Mail International merchandise parcels** only (see 323.72 for markings)

Insured Amount not over	Fee	Insured Amount not over	Fee
$50	$2.45		
100	3.60	Add $1.15 for each additional $100 or fraction of insurance coverage.	
200	4.75		
300	5.90		
400	7.05		
500	8.20	$1,222 max.	$17.40

Size Limits (231.22)
Maximum length: 42 inches
Maximum length and girth combined: 79 inches

First-Class Mail International (240) Price Group 3
For the prices and maximum weights for letters, large envelopes (flats), packages (small packets), and postcards, see Notice 123, *Price List*.

Size Limits
Letters: See 241.212
Postcards: See 241.221
Large Envelopes (Flats): See 241.232
Packages (Small Packets): See 241.242 and 241.243

Airmail M-bags (260) — Direct Sack to One Addressee Price Group 3

Refer to Notice 123, *Price List*, for the applicable retail, commercial base, or commercial plus price.
Weight Limit: 66 lbs.

Matter for the Blind (270)
Free when sent as First-Class Mail International, including Priority Mail International Flat Rate Envelopes and Small Flat Rate Priced Boxes. Weight limit: 4 pounds.
Free when sent as Priority Mail International. Weight limit: 15 pounds.

Extra Services

Certificate of Mailing (313)

Individual Pieces	Fee
Individual article (PS Form 3817)	$1.15
Firm mailing books (PS Form 3877), per article listed (minimum 3)	0.44
Duplicate copy of PS Form 3817 or PS Form 3877 (per page)	1.15
Bulk Quantities	**Fee**
First 1,000 pieces (or fraction thereof)	$6.70
Each additional 1,000 pieces (or fraction thereof)	0.80
Duplicate copy of PS Form 3606	1.15

COD and Certified **NOT** for International Mail

International Business Reply Service (382)
Fee: Envelopes up to 2 ounces $1.50; Cards $1.00

International Postal Money Order (371)
NOT Available

International Reply Coupons (381) **Fee:** $2.20

Registered Mail (330) **Fee:** $11.75
Maximum Indemnity: $47.33
Available for First-Class Mail International, including postcards and Flat Rate Envelopes and Small Flat Rate Priced Boxes, and matter for the blind or other physically handicapped persons. Not applicable to M-bags.

Restricted Delivery (350) NOT Available

Return Receipt (340) **Fee:** $2.35
Available for registered mail and insured Priority Mail International parcels only.

Colombia

Country Conditions for Mailing

Prohibitions (130)

Coins; banknotes; currency notes; securities payable to bearer; traveler's checks; manufactured and unmanufactured platinum, gold, and silver; precious stones; jewelry; and other valuable articles.

Many types of goods are prohibited or subject to an import license; therefore, the sender should ascertain from the addressee before mailing whether the contents are permitted and whether the necessary documents are held.

Perishable infectious biological substances.

Perishable noninfectious biological substances.

Radioactive materials.

Restrictions

New and used clothing is permitted when mailed as unaccompanied baggage. The words "Equipaje no acompanado" and the owner's passport number must be shown on the address label and the accompanying documents. Used clothing must have a certificate of disinfection enclosed.

Observations

1. First-Class Mail International items may not contain dutiable articles.
2. Books and other printed matter, if valued over $20, require consular invoices, and the addressees must obtain import licenses.
3. A commercial invoice, numbered, certified and signed by the sender, must accompany each package containing books and periodicals of a commercial nature. In addition, the value of each item, the number of packages comprising the shipment, and gross weight must be shown on the invoice. One copy of the invoice should be sent to the post office of destination. A note must be made on each package of the number of books contained therein, its weight and the total number of packages comprising the shipment.
4. Packages must be addressed directly to the addressee, as the Colombian regulations do not permit customs entry to be effected by anyone except the addressee or an authorized representative.
5. Each shipment valued at $20 or less requires two copies of the sender's commercial invoice, one of which must be enclosed in the parcel and the other sent under separate cover to the addressee. Consular legalization is not needed but the invoice must include a declaration of origin of the merchandise, in Spanish, reading as follows:

   "Certificamos bajo juramento que los precios de esta factura son los mismos que cargamos al cliente y que la mercancia a que se refiere esta misma factura es originaria de (Country of Origin). En fe de lo expuesto firmamos la presente declaracion en (City, State) (Day) de (Month) de (Year) (Signature of shipper)".

   (Translation: We certify under oath that the prices in this invoice are the same that we charge our customers, and that the merchandise in this same invoice comes from (Country of origin). In faith of which we sign the present declaration at (City, State), on (Date).
6. For shipments valued over $20, the sender must have a copy of his or her commercial invoice legalized by a Colombian Consulate, and must prepare 4 copies of a consular invoice, one of which must be sent direct to the addressee with the legalized commercial invoice.
7. The addressees in Colombia are required in most cases to obtain import licenses in order to secure delivery of shipments. For shipments exceeding $20 in value the addressee is required to send a copy of the import license to the sender, who must submit it to the Colombian Consul when obtaining the consular invoice. If a sender receives a copy of a Colombian import license for a parcel whose value does not exceed $20, he or she must return it to the addressee in Colombia.
8. Consular invoice forms may be obtained and commercial invoices legalized at Colombian Consulates, which are located in principal cities of the United States.

Customs Forms Required (123)

First-Class Mail International items and Priority Mail International Flat Rate Envelopes and Small Flat Rate Priced Boxes:
PS Form 2976 (see 123.61)

Priority Mail International parcels:
PS Form 2976-A inside 2976-E (envelope)

Global Express Guaranteed (210) Price Group 8

Refer to Notice 123, *Price List*, for the applicable retail, commercial base, or commercial plus price.
Weight Limit: 70 lbs.

Insurance (212.5)

Insured Amount not over	Fee	Insured Amount not over	Fee
$100	No Fee	For document reconstruction insurance or non-document insurance coverage above $800, add $1.00 per $100 or fraction thereof, up to a maximum of $2,499 per shipment.	
200	$1.00		
300	2.00		
400	3.00		
500	4.00		
600	5.00		
700	6.00		
800	7.00	$2,499 max.	$24.00

Value Limit (212.1)

The maximum value of a GXG shipment to this country is $2,499 or a lesser amount if limited by content or value.

Size Limits (211.22)

The surface area of the address side of the item to be mailed must be large enough to completely contain the Global Express Guaranteed Air Waybill/Shipping Invoice (shipping label), postage, endorsement, and any applicable markings. The shipping label is approximately 5.5 inches high and 9.5 inches long.

Maximum length: 46 inches
Maximum width: 35 inches
Maximum height: 46 inches
Maximum length and girth combined: 108 inches

General Conditions for Mailing

See Publication 141, *Global Express Guaranteed Service Guide,* for information about areas served in the destination country, allowable contents, packaging and labeling requirements, tracking and tracing, service standards, and other conditions for mailing.

Express Mail International (220) Price Group 9

Refer to Notice 123, *Price List*, for the applicable retail, commercial base, or commercial plus price.
Weight Limit: 44 lbs.

Express Mail International — Flat Rate Envelope and Flat Rate Boxes

The maximum weight for the Express Mail International Flat Rate Envelope and the Express Mail International Flat Rate Boxes is 20 pounds. Refer to Notice 123, *Price List*, for the applicable retail, commercial base, or commercial plus price.

Insurance (222.8)

Available for **Express Mail International merchandise shipments** only

Insured Amount not over	Fee	Insured Amount not over	Fee
$100	No Fee	For insurance coverage above $2,000, add $1.50 for each $500 or fraction thereof, up to a maximum of $5,000 per shipment.	
200	$0.85		
500	2.35		
1,000	3.85		
1,500	5.35		
2,000	6.85	$5,000 max.	$15.85

Articles Admitted	Required Customs Form/Endorsement
Correspondence, business papers, and documents.	No form required. Endorse item clearly next to mailing label as BUSINESS PAPERS.
Merchandise samples without commercial value	PS Form 2976, *Customs — CN 22 and Sender's Declaration.*
Merchandise and all articles subject to customs duty.	PS Form 2976-A, *Customs Declaration and Dispatch Note CP 72,* inside a PS Form 2976-E, *Customs Declaration Envelope CP 91.*

Size Limits (221.52)

Maximum length: 36 inches
Maximum length and girth combined: 79 inches

Notes:

1. Coins; banknotes; currency notes, including paper money; securities of any kind payable to bearer; traveler's checks; platinum, gold, and silver; precious stones; jewelry; watches; and other valuable articles are prohibited in Express Mail International shipments to Colombia.
2. Certain dutiable Express Mail International items will not be delivered to the addressee but must be picked up at the post office. For this reason, all dutiable Express Mail International items to Colombia should include the telephone number of the addressee.

Reciprocal Service Name: Express Service-Rapidissimo

Country Code: CO

Areas Served:

Armenia	Florencia	Popayan
Barrancabermeja	Giron	Quibdo
Barranquilla	Ibague	Riohacha
Bello	Ipiales	Rionegro
Bogata	Itagui	San Andras Isla
Bucamaranga	Leticia	Santa Marta
Buenaventura	Manizales	Sincelejo
Buga	Medellin	Tulua
Cali	Monteria	Tunja
Cartagena	Neiva	Valledupar
Cartago	Palmira	Villavicencio
Cucuta	Pasto	Yopal
Envigado	Pereira	

Priority Mail International (230) Price Group 9

Refer to Notice 123, *Price List*, for the applicable retail, commercial base, or commercial plus price.
Weight Limit: 66 lbs.

Note: *Ordinary Priority Mail International includes indemnity at no cost based on weight. (See 230.)*

Priority Mail International — Flat Rate

Flat Rate Envelopes or Small Flat Rate Priced Boxes: The maximum weight is 4 pounds. Refer to Notice 123, *Price List*, for the applicable retail, commercial base, or commercial plus price.

Flat Rate Boxes — Medium and Large: The maximum weight is 20 pounds, or the limit set by the individual country, whichever is less. Refer to Notice 123, *Price List*, for the retail, commercial base, or commercial plus price.

Insurance (232.92)

Available for **Priority Mail International merchandise parcels** only (see 323.72 for markings)

Insured Amount not over	Fee	Insured Amount not over	Fee
$50	$2.45	Add $1.15 for each additional $100 or fraction of insurance coverage.	
100	3.60		
200	4.75		
300	5.90		
400	7.05		
500	8.20	$999 max.	$13.95

Size Limits (231.22)

Maximum length: 42 inches
Maximum length and girth combined: 79 inches

First-Class Mail International (240) Price Group 9

For the prices and maximum weights for letters, large envelopes (flats), packages (small packets), and postcards, see Notice 123, *Price List*.

Size Limits

Letters: See 241.212
Postcards: See 241.221
Large Envelopes (Flats): See 241.232
Packages (Small Packets): See 241.242 and 241.243

Airmail M-bags (260) — Direct Sack to One Addressee

Price Group 9

Refer to Notice 123, *Price List*, for the applicable retail, commercial base, or commercial plus price.
Weight Limit: 66 lbs.

Matter for the Blind (270)

Free when sent as First-Class Mail International, including Priority Mail International Flat Rate Envelopes and Small Flat Rate Priced Boxes. Weight limit: 4 pounds.

Free when sent as Priority Mail International. Weight limit: 15 pounds.

Extra Services

Certificate of Mailing (313)

Individual Pieces	**Fee**
Individual article (PS Form 3817)	$1.15
Firm mailing books (PS Form 3877), per article listed (minimum 3)	0.44
Duplicate copy of PS Form 3817 or PS Form 3877 (per page)	1.15
Bulk Quantities	**Fee**
First 1,000 pieces (or fraction thereof)	$6.70
Each additional 1,000 pieces (or fraction thereof)	0.80
Duplicate copy of PS Form 3606	1.15

COD and Certified

NOT for International Mail

International Business Reply Service (382)

Fee: Envelopes up to 2 ounces $1.50; Cards $1.00

International Postal Money Order (371)

NOT Available

International Reply Coupons (381)

Fee: $2.20

Registered Mail (330)

Fee: $11.75

Maximum Indemnity: $47.33

Available for First-Class Mail International, including postcards and Flat Rate Envelopes and Small Flat Rate Priced Boxes, and matter for the blind or other physically handicapped persons. Not applicable to M-bags.

Restricted Delivery (350)

NOT Available

Return Receipt (340)

Fee: $2.35

Available for registered mail and insured Priority Mail International parcels only.

Comoros

Country Conditions for Mailing

Prohibitions (130)
Cigarettes and tobacco except when sent by private individuals and intended for personal use of the addressee.
Narcotics except for medical reason.
Newspapers, publications, and works that may jeopardize the Moslem religion or security of the state.
Perishable infectious biological substances.
Radioactive materials.
Weapons and ammunitions of war.

Restrictions
Importation of gold ingots require authorization by the Central Bank.
Weapons and ammunitions for other than war require a special import permit.

Observations
None

Customs Forms Required (123)
First-Class Mail International items and Priority Mail International Flat Rate Envelopes and Small Flat Rate Priced Boxes:
PS Form 2976 (see 123.61)
Priority Mail International parcels:
PS Form 2976-A inside 2976-E (envelope)

Global Express Guaranteed (210)
Not Available

Express Mail International (220)
Not Available

Priority Mail International (230) Price Group 7

Refer to Notice 123, *Price List*, for the applicable retail, commercial base, or commercial plus price.
Weight Limit: 44 lbs.

Note: *Ordinary Priority Mail International includes indemnity at no cost based on weight. (See 230.)*

Priority Mail International — Flat Rate
Flat Rate Envelopes or Small Flat Rate Priced Boxes: The maximum weight is 4 pounds. Refer to Notice 123, *Price List*, for the applicable retail, commercial base, or commercial plus price.

Flat Rate Boxes — Medium and Large: The maximum weight is 20 pounds, or the limit set by the individual country, whichever is less. Refer to Notice 123, *Price List*, for the retail, commercial base, or commercial plus price.

Insurance (232.92)
Available for **Priority Mail International merchandise parcels** only (see 323.72 for markings)

Insured Amount not over	**Fee**
$50	$2.45
100	3.60
200	4.75
300	5.90
400	7.05
500	8.20
600	9.35
690 max.	10.50

Size Limits (231.22)
Maximum length: 42 inches
Maximum length and girth combined: 79 inches

First-Class Mail International (240) Price Group 7
For the prices and maximum weights for letters, large envelopes (flats), packages (small packets), and postcards, see Notice 123, *Price List*.

Size Limits
Letters: See 241.212
Postcards: See 241.221
Large Envelopes (Flats): See 241.232
Packages (Small Packets): See 241.242 and 241.243

Airmail M-bags (260) — Direct Sack to One Addressee Price Group 7

Refer to Notice 123, *Price List*, for the applicable retail, commercial base, or commercial plus price.
Weight Limit: 66 lbs.

Matter for the Blind (270)
Free when sent as First-Class Mail International, including Priority Mail International Flat Rate Envelopes and Small Flat Rate Priced Boxes. Weight limit: 4 pounds.
Free when sent as Priority Mail International. Weight limit: 15 pounds.

Extra Services

Certificate of Mailing (313)

Individual Pieces	Fee
Individual article (PS Form 3817)	$1.15
Firm mailing books (PS Form 3877), per article listed (minimum 3)	0.44
Duplicate copy of PS Form 3817 or PS Form 3877 (per page)	1.15
Bulk Quantities	**Fee**
First 1,000 pieces (or fraction thereof)	$6.70
Each additional 1,000 pieces (or fraction thereof)	0.80
Duplicate copy of PS Form 3606	1.15

COD and Certified

NOT for International Mail

International Business Reply Service (382)

Fee: Envelopes up to 2 ounces $1.50; Cards $1.00

International Postal Money Order (371)

NOT Available

International Reply Coupons (381)

Fee: $2.20

Registered Mail (330)

Fee: $11.75

Maximum Indemnity: $47.33
Available for First-Class Mail International, including postcards and Flat Rate Envelopes and Small Flat Rate Priced Boxes, and matter for the blind or other physically handicapped persons. Not applicable to M-bags.

Restricted Delivery (350)

NOT Available

Return Receipt (340)

Fee: $2.35

Available for registered mail and insured Priority Mail International parcels only.

Congo, Democratic Republic of the

Country Conditions for Mailing

Prohibitions (130)
Perishable infectious biological substances.
Radioactive materials.

Restrictions
Arms of all kinds require the authorization of the Democratic Republic of the Congo Ministry of the Interior.
Medicines and biological products require the authorization of the medical authorities of the Democratic Republic of the Congo.
Saccharine and products containing it require the authorization of the Ministry of Economic Affairs.

Observations
None

Customs Forms Required (123)
First-Class Mail International items and Priority Mail International Flat Rate Envelopes and Small Flat Rate Priced Boxes:
PS Form 2976 (see 123.61)
Priority Mail International parcels:
PS Form 2976-A inside 2976-E (envelope)

Global Express Guaranteed (210) Price Group 4

Refer to Notice 123, *Price List*, for the applicable retail, commercial base, or commercial plus price.

Weight Limit: 66 lbs.

Insurance (212.5)

Insured Amount not over	Fee	Insured Amount not over	Fee
$100	No Fee	For document reconstruction insurance or non-document insurance coverage above $800, add $1.00 per $100 or fraction thereof, up to a maximum of $1,000 per shipment.	
200	$1.00		
300	2.00		
400	3.00		
500	4.00		
600	5.00		
700	6.00		
800	7.00	$1,000 max.	$9.00

Value Limit (212.1)
The maximum value of a GXG shipment to the Democratic Republic of the Congo is $1,000 or a lesser amount if limited by content or value.

Size Limits (211.22)
The surface area of the address side of the item to be mailed must be large enough to completely contain the Global Express Guaranteed Air Waybill/Shipping Invoice (shipping label), postage, endorsement, and any applicable markings. The shipping label is approximately 5.5 inches high and 9.5 inches long.
Maximum length: 46 inches
Maximum width: 35 inches
Maximum height: 46 inches
Maximum length and girth combined: 108 inches

General Conditions for Mailing
See Publication 141, *Global Express Guaranteed Service Guide,* for information about areas served in the destination country, allowable contents, packaging and labeling requirements, tracking and tracing, service standards, and other conditions for mailing.

Express Mail International (220) Price Group 7

Refer to Notice 123, *Price List*, for the applicable retail, commercial base, or commercial plus price.

Weight Limit: 66 lbs.

Express Mail International — Flat Rate Envelope and Flat Rate Boxes

The maximum weight for the Express Mail International Flat Rate Envelope and the Express Mail International Flat Rate Boxes is 20 pounds. Refer to Notice 123, *Price List*, for the applicable retail, commercial base, or commercial plus price.

Insurance (222.8)
Available for **Express Mail International merchandise shipments** only

Insured Amount not over	Fee	Insured Amount not over	Fee
$100	No Fee	For insurance coverage above $2,000, add $1.50 for each $500 or fraction thereof, up to a maximum of $5,000 per shipment.	
200	$0.85		
500	2.35		
1,000	3.85		
1,500	5.35		
2,000	6.85	$5,000 max.	$15.85

Articles Admitted	Required Customs Form/Endorsement
Correspondence, business papers, and documents.	PS Form 2976, *Customs — CN 22 and Sender's Declaration.* Endorse item clearly next to mailing label as BUSINESS PAPERS.
Merchandise samples without commercial value.	PS Form 2976, *Customs — CN 22 and Sender's Declaration.*
Merchandise and all articles subject to customs duty.	PS Form 2976-A, *Customs Declaration and Dispatch Note CP 72,* inside a PS Form 2976-E, *Customs Declaration Envelope CP 91.*

Size Limits (221.52)
Maximum length: 36 inches
Maximum length and girth combined: 79 inches

Note:
Coins; banknotes; currency notes, including paper money; securities of any kind payable to bearer; traveler's checks; platinum, gold, and silver; precious stones; jewelry; watches; and other valuable articles are prohibited in Express Mail International shipments to the Democratic Republic of the Congo.

Reciprocal Service Name: EMS/Democratic Republic of the Congo

Country Code: CD

Areas Served:
Express Mail International is available ***only*** to the following location:
Kinshasa

Priority Mail International (230) Price Group 7

Refer to Notice 123, *Price List*, for the applicable retail, commercial base, or commercial plus price.
Weight Limit: 66 lbs.

Note: *Ordinary Priority Mail International includes indemnity at no cost based on weight. (See 230.)*

Priority Mail International — Flat Rate

Flat Rate Envelopes or Small Flat Rate Priced Boxes: The maximum weight is 4 pounds. Refer to Notice 123, *Price List*, for the applicable retail, commercial base, or commercial plus price.

Flat Rate Boxes — Medium and Large: The maximum weight is 20 pounds, or the limit set by the individual country, whichever is less. Refer to Notice 123, *Price List*, for the retail, commercial base, or commercial plus price.

Insurance (232.92) NOT Available

Size Limits (231.22)

Maximum length: 42 inches
Maximum length and girth combined: 79 inches

First-Class Mail International (240) Price Group 7

For the prices and maximum weights for letters, large envelopes (flats), packages (small packets), and postcards, see Notice 123, *Price List*.

Size Limits

Letters: See 241.212
Postcards: See 241.221
Large Envelopes (Flats): See 241.232
Packages (Small Packets): See 241.242 and 241.243

Airmail M-bags (260) — Direct Sack to One Addressee Price Group 7

Refer to Notice 123, *Price List*, for the applicable retail, commercial base, or commercial plus price.
Weight Limit: 66 lbs.

Matter for the Blind (270) NOT Available

Extra Services

Certificate of Mailing (313)

Individual Pieces	Fee
Individual article (PS Form 3817)	$1.15
Firm mailing books (PS Form 3877), per article listed (minimum 3)	0.44
Duplicate copy of PS Form 3817 or PS Form 3877 (per page)	1.15
Bulk Quantities	**Fee**
First 1,000 pieces (or fraction thereof)	$6.70
Each additional 1,000 pieces (or fraction thereof)	0.80
Duplicate copy of PS Form 3606	1.15

COD and Certified **NOT** for International Mail

International Business Reply Service (382)

Fee: Envelopes up to 2 ounces $1.50; Cards $1.00

International Postal Money Order (371)

NOT Available

International Reply Coupons (381) **Fee:** $2.20

Registered Mail (330) **Fee:** $11.75

Maximum Indemnity: $47.33
Available for First-Class Mail International, including postcards and Flat Rate Envelopes and Small Flat Rate Priced Boxes, and matter for the blind or other physically handicapped persons. Not applicable to M-bags.

Restricted Delivery (350) **Fee:** $4.55

Available for registered mail with a return receipt.
Endorsements: A remettre en main propre.

Return Receipt (340) **Fee:** $2.35

Available for registered mail only.

Congo, Republic of the

Country Conditions for Mailing

Prohibitions (130)

Coins; currency notes (paper money); securities payable to bearer; traveler's checks; manufactured and unmanufactured platinum, gold, silver; precious stones; jewelry; and other valuable articles.
Pamphlets and leaflets containing propaganda derogatory to the countries of Equatorial Africa.
Radioactive materials.

Restrictions

Arms importation must be authorized by Republic of the Congo authorities.
Medical or pharmaceutical products may only be addressed to licensed pharmacists.
Tobacco products. The immediate container (box, case, or cigarette package) must be marked "Vente en U.D.E." (Sale in Equatorial Customs Union) below the trademark.

Observations

None

Customs Forms Required (123)

First-Class Mail International items and Priority Mail International Flat Rate Envelopes and Small Flat Rate Priced Boxes:
PS Form 2976 (see 123.61)
Priority Mail International parcels:
PS Form 2976-A inside 2976-E (envelope)

Global Express Guaranteed (210) Price Group 4

Refer to Notice 123, *Price List*, for the applicable retail, commercial base, or commercial plus price.
Weight Limit: 70 lbs.

Insurance (212.5)

Insured Amount not over	Fee	Insured Amount not over	Fee
$100	No Fee	For document reconstruction insurance or non-document insurance coverage above $800, add $1.00 per $100 or fraction thereof, up to a maximum of $2,499 per shipment.	
200	$1.00		
300	2.00		
400	3.00		
500	4.00		
600	5.00		
700	6.00		
800	7.00	$2,499 max.	$24.00

Value Limit (212.1)

The maximum value of a GXG shipment to this country is $2,499 or a lesser amount if limited by content or value.

Size Limits (211.22)

The surface area of the address side of the item to be mailed must be large enough to completely contain the Global Express Guaranteed Air Waybill/Shipping Invoice (shipping label), postage, endorsement, and any applicable markings. The shipping label is approximately 5.5 inches high and 9.5 inches long.
Maximum length: 46 inches
Maximum width: 35 inches
Maximum height: 46 inches
Maximum length and girth combined: 108 inches

General Conditions for Mailing

See Publication 141, *Global Express Guaranteed Service Guide,* for information about areas served in the destination country, allowable contents, packaging and labeling requirements, tracking and tracing, service standards, and other conditions for mailing.

Express Mail International (220) Price Group 7

Refer to Notice 123, *Price List*, for the applicable retail, commercial base, or commercial plus price.
Weight Limit: 66 lbs.

Express Mail International — Flat Rate Envelope and Flat Rate Boxes

The maximum weight for the Express Mail International Flat Rate Envelope and the Express Mail International Flat Rate Boxes is 20 pounds. Refer to Notice 123, *Price List*, for the applicable retail, commercial base, or commercial plus price.

Insurance (222.8)

Available for **Express Mail International merchandise shipments** only

Insured Amount not over	Fee	Insured Amount not over	Fee
$100	No Fee	For insurance coverage above $2,000, add $1.50 for each $500 or fraction thereof, up to a maximum of $5,000 per shipment.	
200	$0.85		
500	2.35		
1,000	3.85		
1,500	5.35		
2,000	6.85	$5,000 max.	$15.85

Articles Admitted	Required Customs Form/Endorsement
Correspondence and business papers.	PS Form 2976, *Customs — CN 22 and Sender's Declaration.* Endorse item clearly next to mailing label as BUSINESS PAPERS.
Samples of merchandise samples without commercial value.	PS Form 2976, *Customs — CN 22 and Sender's Declaration.*
Merchandise and all articles subject to customs duty.	PS Form 2976-A, *Customs Declaration and Dispatch Note CP 72,* inside a PS Form 2976-E, *Customs Declaration Envelope CP 91.*

Size Limits (221.52)

Maximum length: 36 inches
Maximum length and girth combined: 79 inches

Note:
Coins; banknotes; currency notes, including paper money; securities of any kind payable to bearer; traveler's checks; platinum, gold, and silver; precious stones; jewelry; watches; and other valuable articles are prohibited in Express Mail International shipments to the Republic of the Congo.

Reciprocal Service Name: Postexpress

Country Code: CG

Areas Served: All

Priority Mail International (230) Price Group 7

Refer to Notice 123, *Price List*, for the applicable retail, commercial base, or commercial plus price.
Weight Limit: 44 lbs.

Note: *Ordinary Priority Mail International includes indemnity at no cost based on weight. (See 230.)*

Priority Mail International — Flat Rate
Flat Rate Envelopes or Small Flat Rate Priced Boxes: The maximum weight is 4 pounds. Refer to Notice 123, *Price List*, for the applicable retail, commercial base, or commercial plus price.

Flat Rate Boxes — Medium and Large: The maximum weight is 20 pounds, or the limit set by the individual country, whichever is less. Refer to Notice 123, *Price List*, for the retail, commercial base, or commercial plus price.

Insurance (232.92)
Available for **Priority Mail International merchandise parcels** only (see 323.72 for markings)

Insured Amount not over	Fee	Insured Amount not over	Fee
$50	$2.45		
100	3.60	Add $1.15 for each additional $100 or fraction of insurance coverage.	
200	4.75		
300	5.90		
400	7.05		
500	8.20	$1,685 max.	$22.00

Size Limits (231.22)
Maximum length: 42 inches
Maximum length and girth combined: 79 inches

First-Class Mail International (240) Price Group 7
For the prices and maximum weights for letters, large envelopes (flats), packages (small packets), and postcards, see Notice 123, *Price List*.

Size Limits
Letters: See 241.212
Postcards: See 241.221
Large Envelopes (Flats): See 241.232
Packages (Small Packets): See 241.242 and 241.243

Airmail M-bags (260) — Direct Sack to One Addressee Price Group 7

Refer to Notice 123, *Price List*, for the applicable retail, commercial base, or commercial plus price.
Weight Limit: 66 lbs.

Matter for the Blind (270) NOT Available

Extra Services

Certificate of Mailing (313)

Individual Pieces	Fee
Individual article (PS Form 3817)	$1.15
Firm mailing books (PS Form 3877), per article listed (minimum 3)	0.44
Duplicate copy of PS Form 3817 or PS Form 3877 (per page)	1.15
Bulk Quantities	**Fee**
First 1,000 pieces (or fraction thereof)	$6.70
Each additional 1,000 pieces (or fraction thereof)	0.80
Duplicate copy of PS Form 3606	1.15

COD and Certified **NOT** for International Mail

International Business Reply Service (382)
Fee: Envelopes up to 2 ounces $1.50; Cards $1.00

International Postal Money Order (371)
NOT Available

International Reply Coupons (381) **Fee:** $2.20

Registered Mail (330) **Fee:** $11.75
Maximum Indemnity: $47.33
Available for First-Class Mail International, including postcards and Flat Rate Envelopes and Small Flat Rate Priced Boxes, and matter for the blind or other physically handicapped persons. Not applicable to M-bags.

Restricted Delivery (350) **Fee:** $4.55
Available for registered mail with a return receipt.
Endorsements: A remettre en main propre.

Return Receipt (340) **Fee:** $2.35
Available for registered mail and insured Priority Mail International parcels only.

Costa Rica

Country Conditions for Mailing

Prohibitions (130)

Blank invoices.
Coins; banknotes; currency notes; securities payable to bearer; traveler's checks; manufactured and unmanufactured platinum, gold, and silver; precious stones; jewelry; and other valuable articles.
Dual-graduation feeding bottles.
Flammable or explosive substances.
Medical samples containing psychotropic substances.
Perishable infectious biological substances.
Perishable noninfectious biological substances.
Radioactive Materials.

Restrictions

A certificate of disinfection must be enclosed in packages containing used clothing. Senders should endorse the wrapper to show that a certificate of disinfection is enclosed.

Observations

Commercial shipments must be accompanied by a commercial invoice in duplicate. These invoices must be attached to the item or enclosed inside the item.

Customs Forms Required (123)

First-Class Mail International items and Priority Mail International Flat Rate Envelopes and Small Flat Rate Priced Boxes:
PS Form 2976 (see 123.61)
Priority Mail International parcels:
PS Form 2976-A inside 2976-E (envelope)

Global Express Guaranteed (210) Price Group 8

Refer to Notice 123, *Price List*, for the applicable retail, commercial base, or commercial plus price.
Weight Limit: 70 lbs.

Insurance (212.5)

Insured Amount not over	Fee	Insured Amount not over	Fee
$100	No Fee	For document reconstruction insurance or non-document insurance coverage above $800, add $1.00 per $100 or fraction thereof, up to a maximum of $2,499 per shipment.	
200	$1.00		
300	2.00		
400	3.00		
500	4.00		
600	5.00		
700	6.00		
800	7.00	$2,499 max.	$24.00

Value Limit (212.1)

The maximum value of a GXG shipment to this country is $2,499 or a lesser amount if limited by content or value.

Size Limits (211.22)

The surface area of the address side of the item to be mailed must be large enough to completely contain the Global Express Guaranteed Air Waybill/Shipping Invoice (shipping label), postage, endorsement, and any applicable markings. The shipping label is approximately 5.5 inches high and 9.5 inches long.
Maximum length: 46 inches
Maximum width: 35 inches
Maximum height: 46 inches
Maximum length and girth combined: 108 inches

General Conditions for Mailing

See Publication 141, *Global Express Guaranteed Service Guide,* for information about areas served in the destination country, allowable contents, packaging and labeling requirements, tracking and tracing, service standards, and other conditions for mailing.

Express Mail International (220) Price Group 9

Refer to Notice 123, *Price List*, for the applicable retail, commercial base, or commercial plus price.
Weight Limit: 66 lbs.

Express Mail International — Flat Rate Envelope and Flat Rate Boxes

The maximum weight for the Express Mail International Flat Rate Envelope and the Express Mail International Flat Rate Boxes is 20 pounds. Refer to Notice 123, *Price List*, for the applicable retail, commercial base, or commercial plus price.

Insurance (222.8)

Available for **Express Mail International merchandise shipments** only

Insured Amount not over	Fee	Insured Amount not over	Fee
$100	No Fee	For insurance coverage above $2,000, add $1.50 for each $500 or fraction thereof, up to a maximum of $5,000 per shipment.	
200	$0.85		
500	2.35		
1,000	3.85		
1,500	5.35		
2,000	6.85	$5,000 max.	$15.85

Articles Admitted	Required Customs Form/Endorsement
Correspondence and business papers.	PS Form 2976, *Customs — CN 22 and Sender's Declaration.* Endorse item clearly next to mailing label as DOCUMENTS WITHOUT COMMERCIAL VALUE.
Merchandise samples without commercial value.	PS Form 2976, *Customs — CN 22 and Sender's Declaration.*
Merchandise and all articles subject to customs duty.	PS Form 2976-A, *Customs Declaration and Dispatch Note CP 72,* inside a PS Form 2976-E, *Customs Declaration Envelope CP 91.*

Size Limits (221.52)

Maximum length: 36 inches
Maximum length and girth combined: 79 inches

Note:

Coins; banknotes; currency notes, including paper money; securities of any kind payable to bearer; traveler's checks; platinum, gold, and silver; precious stones; jewelry; watches; and other valuable articles are prohibited in Express Mail International shipments to Costa Rica.

Reciprocal Service Name: EMS-Express Mail Service

Country Code: CR

Areas Served:

Express Mail International is available ***only*** to the following locations:
Alajuela
Cartago
Heredia
San Jose

Priority Mail International (230) Price Group 9

Refer to Notice 123, *Price List*, for the applicable retail, commercial base, or commercial plus price.
Weight Limit: 66 lbs.

Note: *Ordinary Priority Mail International includes indemnity at no cost based on weight. (See 230.)*

Priority Mail International — Flat Rate

Flat Rate Envelopes or Small Flat Rate Priced Boxes: The maximum weight is 4 pounds. Refer to Notice 123, *Price List*, for the applicable retail, commercial base, or commercial plus price.

Flat Rate Boxes — Medium and Large: The maximum weight is 20 pounds, or the limit set by the individual country, whichever is less. Refer to Notice 123, *Price List*, for the retail, commercial base, or commercial plus price.

Insurance (232.92) NOT Available

Size Limits (231.22)

Maximum length: 42 inches
Maximum length and girth combined: 79 inches

First-Class Mail International (240) Price Group 9

For the prices and maximum weights for letters, large envelopes (flats), packages (small packets), and postcards, see Notice 123, *Price List*.

Size Limits

Letters: See 241.212
Postcards: See 241.221
Large Envelopes (Flats): See 241.232
Packages (Small Packets): See 241.242 and 241.243

Airmail M-bags (260) — Direct Sack to One Addressee Price Group 9

Refer to Notice 123, *Price List*, for the applicable retail, commercial base, or commercial plus price.
Weight Limit: 66 lbs.

Matter for the Blind (270)

Free when sent as First-Class Mail International, including Priority Mail International Flat Rate Envelopes and Small Flat Rate Priced Boxes. Weight limit: 4 pounds.
Free when sent as Priority Mail International. Weight limit: 15 pounds.

Extra Services

Certificate of Mailing (313)

Individual Pieces	Fee
Individual article (PS Form 3817)	$1.15
Firm mailing books (PS Form 3877), per article listed (minimum 3)	0.44
Duplicate copy of PS Form 3817 or PS Form 3877 (per page)	1.15
Bulk Quantities	**Fee**
First 1,000 pieces (or fraction thereof)	$6.70
Each additional 1,000 pieces (or fraction thereof)	0.80
Duplicate copy of PS Form 3606	1.15

COD and Certified **NOT** for International Mail

International Business Reply Service (382)

Fee: Envelopes up to 2 ounces $1.50; Cards $1.00

International Postal Money Order (371)

NOT Available

International Reply Coupons (381) **Fee:** $2.20

Registered Mail (330) **Fee:** $11.75

Maximum Indemnity: $47.33
Available for First-Class Mail International, including postcards and Flat Rate Envelopes and Small Flat Rate Priced Boxes, and matter for the blind or other physically handicapped persons. Not applicable to M-bags.

Restricted Delivery (350) NOT Available

Return Receipt (340) **Fee:** $2.35

Available for registered mail only.

Cote d'Ivoire
(Ivory Coast)

Country Conditions for Mailing

Prohibitions (130)
Articles bearing the Red Cross or Geneva Cross as a trademark.
Butane lighters.
Daggers, sword-canes, brass knuckles, blackjacks, and other secret weapons; firing caps; and loaded metal cartridges.
Foreign products, natural or manufactured, having markings, labels, or wrappings of any kind that may give the impression that they are of Ivory Coast origin.
Loose, uncleft or uncut diamonds.
Perishable infectious biological substances.
Perishable noninfectious biological substances.
Radioactive materials.
Weights and measures not of the decimal system.

Restrictions
Arabic books and prints are subject to special checking on importation.
Gold and gold articles (except jewelry and gold articles that are personal belongings in current use) require an import license from the Ministry of Economics and Finance.
Tinned fish, vegetables, and plums must bear on each container an indication of the country of origin in raised or sunken letters at least 4 millimeters (3/8 inch) high, in the middle of the lid and of the bottom, in a space not bearing any inscription. Cases and wrappers containing these products must bear adhering letters indicating the country of origin.

Observations
1. First-Class Mail International items containing dutiable articles must be registered.
2. Postal authorities of Ivory Coast collect domestic postage from addressees for inbound shipments.

Customs Forms Required (123)
First-Class Mail International items and Priority Mail International Flat Rate Envelopes and Small Flat Rate Priced Boxes:
PS Form 2976 (see 123.61)
Priority Mail International parcels:
PS Form 2976-A inside 2976-E (envelope)

Global Express Guaranteed (210) Price Group 4

Refer to Notice 123, *Price List*, for the applicable retail, commercial base, or commercial plus price.
Weight Limit: 70 lbs.

Insurance (212.5)

Insured Amount not over	Fee	Insured Amount not over	Fee
$100	No Fee	For document reconstruction insurance or non-document insurance coverage above $800, add $1.00 per $100 or fraction thereof, up to a maximum of $2,499 per shipment.	
200	$1.00		
300	2.00		
400	3.00		
500	4.00		
600	5.00		
700	6.00		
800	7.00	$2,499 max.	$24.00

Value Limit (212.1)
The maximum value of a GXG shipment to this country is $2,499 or a lesser amount if limited by content or value.

Size Limits (211.22)
The surface area of the address side of the item to be mailed must be large enough to completely contain the Global Express Guaranteed Air Waybill/Shipping Invoice (shipping label), postage, endorsement, and any applicable markings. The shipping label is approximately 5.5 inches high and 9.5 inches long.
Maximum length: 46 inches
Maximum width: 35 inches
Maximum height: 46 inches
Maximum length and girth combined: 108 inches

General Conditions for Mailing
See Publication 141, *Global Express Guaranteed Service Guide,* for information about areas served in the destination country, allowable contents, packaging and labeling requirements, tracking and tracing, service standards, and other conditions for mailing.

Express Mail International (220) Price Group 7

Refer to Notice 123, *Price List*, for the applicable retail, commercial base, or commercial plus price.
Weight Limit: 66 lbs.

Express Mail International — Flat Rate Envelope and Flat Rate Boxes
The maximum weight for the Express Mail International Flat Rate Envelope and the Express Mail International Flat Rate Boxes is 20 pounds. Refer to Notice 123, *Price List*, for the applicable retail, commercial base, or commercial plus price.

Insurance (222.8)
Available for **Express Mail International merchandise shipments** only

Insured Amount not over	Fee	Insured Amount not over	Fee
$100	No Fee	For insurance coverage above $2,000, add $1.50 for each $500 or fraction thereof, up to a maximum of $5,000 per shipment.	
200	$0.85		
500	2.35		
1,000	3.85		
1,500	5.35		
2,000	6.85	$5,000 max.	$15.85

Articles Admitted	Required Customs Form/Endorsement
Correspondence, business papers, and computer data.	PS Form 2976, *Customs — CN 22 and Sender's Declaration.* Endorse item clearly next to mailing label as BUSINESS PAPERS.
Merchandise samples without commercial value.	PS Form 2976-A, *Customs Declaration and Dispatch Note CP 72,* inside a PS Form 2976-E, *Customs Declaration Envelope CP 91.*
Merchandise and all articles subject to customs duty.	PS Form 2976-A, *Customs Declaration and Dispatch Note CP 72,* inside a PS Form 2976-E, *Customs Declaration Envelope CP 91.*

Size Limits (221.52)
Maximum length: 36 inches
Maximum length and girth combined: 79 inches

Note:
Coins; banknotes; currency notes, including paper money; securities of any kind payable to bearer; traveler's checks; platinum, gold, and silver; precious stones; jewelry; watches; and other valuable articles are prohibited in Express Mail International shipments to the Cote d'Ivoire.

Reciprocal Service Name: Poste Express Internationale

Country Code: CI

Areas Served: Available only to Abidjan and Yamoussoukro.

Priority Mail International (230) Price Group 7

Refer to Notice 123, *Price List*, for the applicable retail, commercial base, or commercial plus price.
Weight Limit: 66 lbs.

Note: *Ordinary Priority Mail International includes indemnity at no cost based on weight. (See 230.)*

Priority Mail International — Flat Rate

Flat Rate Envelopes or Small Flat Rate Priced Boxes: The maximum weight is 4 pounds. Refer to Notice 123, *Price List*, for the applicable retail, commercial base, or commercial plus price.

Flat Rate Boxes — Medium and Large: The maximum weight is 20 pounds, or the limit set by the individual country, whichever is less. Refer to Notice 123, *Price List*, for the retail, commercial base, or commercial plus price.

Insurance (232.92)

Available for **Priority Mail International merchandise parcels** only (see 323.72 for markings)

Insured Amount not over	Fee	Insured Amount not over	Fee
$50	$2.45		
100	3.60	Add $1.15 for each additional $100 or fraction of insurance coverage.	
200	4.75		
300	5.90		
400	7.05		
500	8.20	$5,000 max.	$59.95

Size Limits (231.22)

Maximum length: 42 inches
Maximum length and girth combined: 79 inches

First-Class Mail International (240) Price Group 7

For the prices and maximum weights for letters, large envelopes (flats), packages (small packets), and postcards, see Notice 123, *Price List*.

Size Limits

Letters: See 241.212
Postcards: See 241.221
Large Envelopes (Flats): See 241.232
Packages (Small Packets): See 241.242 and 241.243

Airmail M-bags (260) — Direct Sack to One Addressee Price Group 7

Refer to Notice 123, *Price List*, for the applicable retail, commercial base, or commercial plus price.
Weight Limit: 66 lbs.

Matter for the Blind (270) NOT Available

Extra Services

Certificate of Mailing (313)

Individual Pieces	Fee
Individual article (PS Form 3817)	$1.15
Firm mailing books (PS Form 3877), per article listed (minimum 3)	0.44
Duplicate copy of PS Form 3817 or PS Form 3877 (per page)	1.15
Bulk Quantities	**Fee**
First 1,000 pieces (or fraction thereof)	$6.70
Each additional 1,000 pieces (or fraction thereof)	0.80
Duplicate copy of PS Form 3606	1.15

COD and Certified **NOT** for International Mail

International Business Reply Service (382)

Fee: Envelopes up to 2 ounces $1.50; Cards $1.00

International Postal Money Order (371)

NOT Available

International Reply Coupons (381) **Fee:** $2.20

Registered Mail (330) **Fee:** $11.75

Maximum Indemnity: $47.33
Available for First-Class Mail International, including postcards and Flat Rate Envelopes and Small Flat Rate Priced Boxes, and matter for the blind or other physically handicapped persons. Not applicable to M-bags.

Restricted Delivery (350) NOT Available

Return Receipt (340) **Fee:** $2.35

Available for registered mail and insured Priority Mail International parcels only.

Croatia

Country Conditions for Mailing

Prohibitions (130)

The Croatian government has instituted a temporary ban against the importation of all meat, milk, and dairy products derived from cows, goats, sheep, pigs, hogs, or other animal species that are susceptible to foot and mouth disease.

Restrictions

No list furnished.

Observations

No list furnished.

Customs Forms Required (123)

First-Class Mail International items and Priority Mail International Flat Rate Envelopes and Small Flat Rate Priced Boxes:
PS Form 2976 (see 123.61)
Priority Mail International parcels:
PS Form 2976-A inside 2976-E (envelope)

Global Express Guaranteed (210) Price Group 4

Refer to Notice 123, *Price List*, for the applicable retail, commercial base, or commercial plus price.
Weight Limit: 70 lbs.

Insurance (212.5)

Insured Amount not over	Fee	Insured Amount not over	Fee
$100	No Fee	For document reconstruction insurance or non-document insurance coverage above $800, add $1.00 per $100 or fraction thereof, up to a maximum of $2,499 per shipment.	
200	$1.00		
300	2.00		
400	3.00		
500	4.00		
600	5.00		
700	6.00		
800	7.00	$2,499 max.	$24.00

Value Limit (212.1)

The maximum value of a GXG shipment to this country is $2,499 or a lesser amount if limited by content or value.

Size Limits (211.22)

The surface area of the address side of the item to be mailed must be large enough to completely contain the Global Express Guaranteed Air Waybill/Shipping Invoice (shipping label), postage, endorsement, and any applicable markings. The shipping label is approximately 5.5 inches high and 9.5 inches long.
Maximum length: 46 inches
Maximum width: 35 inches
Maximum height: 46 inches
Maximum length and girth combined: 108 inches

General Conditions for Mailing

See Publication 141, *Global Express Guaranteed Service Guide,* for information about areas served in the destination country, allowable contents, packaging and labeling requirements, tracking and tracing, service standards, and other conditions for mailing.

Express Mail International (220) Price Group 4

Refer to Notice 123, *Price List*, for the applicable retail, commercial base, or commercial plus price.
Weight Limit: 66 lbs.

Express Mail International — Flat Rate Envelope and Flat Rate Boxes

The maximum weight for the Express Mail International Flat Rate Envelope and the Express Mail International Flat Rate Boxes is 20 pounds. Refer to Notice 123, *Price List*, for the applicable retail, commercial base, or commercial plus price.

Insurance (222.8)

Available for **Express Mail International merchandise shipments** only

Insured Amount not over	Fee	Insured Amount not over	Fee
$100	No Fee	For insurance coverage above $2,000, add $1.50 for each $500 or fraction thereof, up to a maximum of $5,000 per shipment.	
200	$0.85		
500	2.35		
1,000	3.85		
1,500	5.35		
2,000	6.85	$5,000 max.	$15.85

Articles Admitted	Required Customs Form/Endorsement
Correspondence and business papers.	PS Form 2976, *Customs — CN 22 and Sender's Declaration.* Endorse item clearly next to mailing label as BUSINESS PAPERS.
Merchandise samples without commercial value.	PS Form 2976, *Customs — CN 22 and Sender's Declaration.*
Merchandise and all articles subject to customs duty.	PS Form 2976-A, *Customs Declaration and Dispatch Note CP 72,* inside a PS Form 2976-E, *Customs Declaration Envelope CP 91.* Include a commercial invoice in each item.

Size Limits (221.52)

Maximum length: 36 inches
Maximum length and girth combined: 79 inches

Notes:

1. Two commercial invoices must be included with all commercial shipments.
2. Coins; banknotes; currency notes, including paper money; securities of any kind payable to bearer; traveler's checks; platinum, gold, and silver; precious stones; jewelry; watches; and other valuable articles are prohibited in Express Mail International shipments to Croatia.

Reciprocal Service Name: EMS

Country Code: HR

Areas Served: All

Priority Mail International (230) Price Group 4

Refer to Notice 123, *Price List*, for the applicable retail, commercial base, or commercial plus price.
Weight Limit: 66 lbs.

Note: *Ordinary Priority Mail International includes indemnity at no cost based on weight. (See 230.)*

Priority Mail International — Flat Rate

Flat Rate Envelopes or Small Flat Rate Priced Boxes: The maximum weight is 4 pounds. Refer to Notice 123, *Price List*, for the applicable retail, commercial base, or commercial plus price.

Flat Rate Boxes — Medium and Large: The maximum weight is 20 pounds, or the limit set by the individual country, whichever is less. Refer to Notice 123, *Price List*, for the retail, commercial base, or commercial plus price.

Insurance (232.92)

Available for **Priority Mail International merchandise parcels** only (see 323.72 for markings)

Insured Amount not over	Fee	Insured Amount not over	Fee
$50	$2.45		
100	3.60	Add $1.15 for each additional $100 or fraction of insurance coverage.	
200	4.75		
300	5.90		
400	7.05		
500	8.20	$5,000 max.	$59.95

Size Limits (231.22)

Maximum length: 42 inches
Maximum length and girth combined: 79 inches

First-Class Mail International (240) Price Group 4

For the prices and maximum weights for letters, large envelopes (flats), packages (small packets), and postcards, see Notice 123, *Price List*.

Size Limits

Letters: See 241.212
Postcards: See 241.221
Large Envelopes (Flats): See 241.232
Packages (Small Packets): See 241.242 and 241.243

Airmail M-bags (260) — Direct Sack to One Addressee Price Group 4

Refer to Notice 123, *Price List*, for the applicable retail, commercial base, or commercial plus price.
Weight Limit: 66 lbs.

Matter for the Blind (270)

Free when sent as First-Class Mail International, including Priority Mail International Flat Rate Envelopes and Small Flat Rate Priced Boxes. Weight limit: 4 pounds.
Free when sent as Priority Mail International. Weight limit: 15 pounds.

Extra Services

Certificate of Mailing (313)

Individual Pieces	Fee
Individual article (PS Form 3817)	$1.15
Firm mailing books (PS Form 3877), per article listed (minimum 3)	0.44
Duplicate copy of PS Form 3817 or PS Form 3877 (per page)	1.15
Bulk Quantities	**Fee**
First 1,000 pieces (or fraction thereof)	$6.70
Each additional 1,000 pieces (or fraction thereof)	0.80
Duplicate copy of PS Form 3606	1.15

COD and Certified **NOT** for International Mail

International Business Reply Service (382)

Fee: Envelopes up to 2 ounces $1.50; Cards $1.00

International Postal Money Order (371)

NOT Available

International Reply Coupons (381) **Fee:** $2.20

Registered Mail (330) **Fee:** $11.75

Maximum Indemnity: $47.33
Available for First-Class Mail International, including postcards and Flat Rate Envelopes and Small Flat Rate Priced Boxes, and matter for the blind or other physically handicapped persons. Not applicable to M-bags.

Restricted Delivery (350) NOT Available

Return Receipt (340) **Fee:** $2.35

Available for registered mail and insured Priority Mail International parcels only.

Cuba

Country Conditions for Mailing

Mail service is limited to First-Class Mail International items, International Priority Airmail (IPA) items, International Surface Air Lift (ISAL) items, and Priority Mail International Flat Rate Envelope and Small Flat Rate Priced Boxes items. Priority Mail International parcel service is not available.

The Office of Foreign Assets Control (OFAC) of the U.S. Department of the Treasury administers sanctions that restrict the mailing of items to certain destinations and recipients, including a broad sanctions program against Cuba. Prior to mailing any items to Cuba, mailers should refer to IMM 510 or access *www.treas.gov/ofac* for additional information.

In addition, prior to mailing, mailers mailing gift parcels and humanitarian donations must abide by the rules in 15 CFR § 740.12, or with the rules for consumer communications devices, computers, and software in 15 CFR § 740.19, which can be accessed at *www.gpoaccess.gov/cfr*. The maximum weight is 4 pounds. Potentially dutiable items may be confiscated upon entering Cuba or returned to sender.

Generally (and consistent with 15 CFR § 740.12 and § 740.19), the following standards apply when mailing goods to Cuba:

Gift Parcels

Eligible Gift Parcels to Cuba

Eligible gift parcels for Cuba may include any of the following: food (including vitamins); medicines; medical supplies and devices (including hospital supplies and equipment and equipment for the handicapped); receive-only radio equipment for reception of commercial/civil AM/FM and short wave publicly available frequency bands, and batteries for such equipment; clothing; personal hygiene items; seeds; veterinary medicines and supplies; fishing equipment and supplies; soap-making equipment; and all other items of a type normally sent as gifts between individuals (including consumer communications devices, computers, and software as described below and in 15 CFR § 740.19(b)) except for certain items prohibited under U.S. Department of Commerce regulations (described below). Items in gift parcels must be in quantities normally given as gifts between individuals.

Note: A digital camera within the value limit (see "Value" below) may be an appropriate gift. However, subsequent shipments of the same item to the same recipient would not be a gift normally given between individuals.

Note: Even if Commerce Department regulations permit an article to be sent out of the United States in a gift parcel, the article might still be subject to a Cuban import prohibition or other prohibition. Accordingly, articles included in gift parcels may be subject to detention or seizure upon arrival in Cuba.

Export and Shipping Requirements

A gift parcel must be sent directly to the recipient by the individual donor or for such donor by a commercial or other gift-forwarding service or organization. Each gift parcel must show, on the outside wrapper, the name and address of the donor, as well as the name and address of the recipient, regardless of whether sent by the donor or by a forwarding service. Each parcel must have the notation "GIFT—Export License Not Required" written on the address side of the package and the symbol "GFT" written on any required customs declaration.

Prohibited Items

Items not eligible for inclusion in gift parcels as listed in 15 CFR § 740.12(a).

All items included on the Commerce Control List (15 CFR Part 774), other than consumer communications devices, computers, and software.

Military wearing apparel, regardless of whether all distinctive U.S. military insignia, buttons, and other markings are removed.

Gold bullion, gold taels, and gold bars.

Items listed under the general listing of prohibitions below.

Frequency

Except for gift parcels of food, not more than one gift parcel may be sent from the same donor to the same recipient in any one calendar month. There is no frequency limit on gift parcels of food to Cuba.

Parties seeking authorization to exceed the frequency limit due to compelling humanitarian concerns (e.g., for certain gifts of medicine) should submit a license application, with complete justification, to the Commerce Department, Bureau of Industry and Security, in accordance with 15 CFR §§ 748.1, 748.4, and 748.6.

Value

The combined total domestic retail value of all commodities in a single gift parcel may not exceed $800. This limit does not apply to food sent in a gift parcel.

Note: Although Commerce Department regulations provide an $800 maximum limit for these items, the total value for each First-Class Mail International, International Priority Airmail, International Surface Air Lift, and Priority Mail International Flat Rate Envelope and Small Flat Rate Priced Boxes item cannot exceed $400.

Eligible Recipients

A gift parcel may be sent to any individual or a religious, charitable, or educational organization for the use of the recipient or the recipient's immediate family (and not for resale). The gift parcel must be provided free of charge to the recipient. However, payment by the recipient of any handling charges or of any fees levied by Cuba (e.g., import duties, taxes, etc.) is not considered to be a cost to the recipient for purposes of this definition of gift parcel.

Ineligible Recipients

No gift parcel may be sent to any of the following officials of the Cuban government: ministers and vice-ministers; members of the Council of State; members of the Council of Ministers; members and employees of the National Assembly of People's Power; members of any provincial assembly; local sector chiefs of the Committees for the Defense of the Revolution; director generals and sub-director generals and higher of all Cuban ministries and state agencies; employees of the Ministry of the Interior (MININT); employees of the Ministry of Defense (MINFAR); secretaries and first secretaries of the Confederation of Labor of Cuba (CTC) and its component unions; chief editors, editors, and deputy editors of Cuban state-run media organizations and programs, including newspapers, television, and radio; or members and employees of the Supreme Court (Tribuno Supremo Nacional).

No gift parcel may be sent to any of the following officials or members of the Cuban Communist Party: members of the Politburo; the Central Committee; department heads of the Central Committee; employees of the Central Committee; and the secretaries and first secretaries of provincial Party central committees.

No gift parcel may be sent to organizations administered or controlled by the Cuban government or the Cuban Communist Party.

Humanitarian Donations

Eligible Humanitarian Donations to Cuba

Articles eligible for inclusion in humanitarian donation items to Cuba must meet basic human needs, which are defined as those requirements essential to individual well-being: health, food, clothing, shelter, and education. These needs are considered to extend beyond those of an emergency nature and those that meet direct needs for mere subsistence.

Items must be provided free of charge to the beneficiary. However, the payment by the beneficiary of normal handling charges or fees levied by Cuba (e.g., import duties, taxes, etc.) is not considered to be a cost to the beneficiary.

Eligible commodities and software are those listed in Supplement No. 2 to 15 CFR Part 740: equipment for the handicapped; hospital supplies and equipment; laboratory supplies and equipment; medical supplies and devices; medicine-processing equipment; medicines; vitamins; water resources equipment; food; agricultural materials and machinery suited to small-scale farming operations; agricultural research and testing equipment; fertilizers; fishing equipment and supplies suited to small-scale fishing operations; insecticides; pesticides; seeds; small-scale irrigation equipment; veterinary medicines and supplies; bedding; clothes; cooking utensils; fabric; personal hygiene items; soap-making equipment; weaving and sewing equipment; building materials; hand tools; books; individual school supplies; school furniture; special education supplies and equipment for the handicapped; and generators, office supplies, audio-visual aids for training, and equipment necessary to operate and administer the donative program.

Export and Shipping Requirements

Each humanitarian donation must show on the outside wrapper the name and address of the donor, as well as the name and address of the recipient, regardless of whether sent by the donor or by a forwarding service.

Each parcel must have the notation "GIFT—Export License Not Required" written on the address side of the package and the symbol "GFT" written on any required customs declaration.

Eligible Donors

Eligible donors are U.S. charitable organizations that have an established record of involvement in donation programs and experience in maintaining and verifying a system of distribution to ensure delivery of commodities and software to the intended beneficiaries. The donor organization must keep records containing certain information, in accordance with 15 CFR § 740.12(b)(7).

Eligible Recipients

Humanitarian donations may be sent to groups or organizations that have experience in maintaining a verifiable system of distribution that ensures delivery to intended beneficiaries of items that meet basic human needs.

Consumer Communications Devices, Computers, and Software

Eligible Consumer Communications Devices, Computers, and Software (CCD) to Cuba

In accordance with Commerce Department rules, the following commodities and software are eligible for export as CCD items:

1. Computers classified under Export Control Classification Number (ECCN) 4A994.b or designated EAR99 that do not exceed an adjusted peak performance of 0.02 weighted teraflops.
2. Disk drives and solid state storage equipment classified under ECCN 5A992 or designated EAR99.
3. Input/output control units (other than industrial controllers designed for chemical processing) designated EAR99.
4. Graphics accelerators and graphics coprocessors designated EAR99.
5. Monitors classified under ECCN 5A992 or designated EAR99.
6. Printers classified under ECCN 5A992 or designated EAR99.
7. Modems classified under ECCNs 5A991.b.2 or 5A992 or designated EAR99.
8. Network access controllers and communications channel controllers classified under ECCN 5A991.b.4 or designated EAR99.
9. Keyboards, mice, and similar devices designated EAR99.
10. Mobile phones, including cellular and satellite telephones, personal digital assistants, and subscriber information module (SIM) cards and similar devices classified under ECCNs 5A992 or 5A991 or designated EAR99.
11. Memory devices classified under ECCN 5A992 or designated EAR99.
12. "Information security" equipment, "software" (except "encryption source code"), and peripherals classified under ECCNs 5A992 or 5D992 or designated EAR99.
13. Digital cameras and memory cards classified under ECCN 5A992 or designated EAR99.
14. Television and radio receivers classified under ECCN 5A992 or designated EAR99.
15. Recording devices classified under ECCN 5A992 or designated EAR99.
16. Batteries, chargers, carrying cases, and accessories for the equipment described in this paragraph that are designated EAR99.
17. "Software" (except "encryption source code") classified under ECCNs 4D994, 5D991, or 5D992 or designated EAR99 to be used for equipment described in this paragraph.

Prohibited CCD Items

Items not included on the list above.

Value and Frequency

There are no limits on value or frequency of shipments.

Note: Although Commerce Department regulations provide no maximum limit for CCD items, the total value for each First-Class Mail International, International Priority Airmail, International Surface Air Lift, and Priority Mail International Flat Rate Envelope and Small Flat Rate Priced Boxes item cannot exceed $400.

Donation Requirement

CCD items must be donated free of charge by the exporter to one or more eligible end-users. The payment by an end-user of any handling charges arising within Cuba or any charges levied by the government of Cuba shall not be considered a charge for these purposes.

Export and Shipping Requirements

Each CCD item must have the symbol "CCD" written on any required customs declaration.

Prior to mailing a CCD item, the customer must file electronic export information via the Census Bureau's Automated Export System or AES*Direct* Web site and must comply with other applicable requirements (see 520).

Note: These requirements do not apply to CCD-type articles included in a gift parcel item.

Eligible End-users

Organizations. The Commerce Department License Exception may be used to export or re-export eligible commodities and software to and for the use of independent non-governmental organizations. As indicated in the "Ineligible End-users" paragraph below, the Cuban government and the Cuban Communist Party and organizations they administer or control are *not* eligible end-users.

Individuals. The Commerce Department License Exception may be used to export eligible commodities and software to and for the use of individuals other than the officials of the Cuban government and Cuban Communist Party listed in the following paragraph.

Ineligible End-users

Ineligible Cuban Government Officials. Ministers and vice-ministers; members of the Council of State; members of the Council of Ministers; members and employees of the National Assembly of People's Power; members of any provincial assembly; local sector chiefs of the Committees for the Defense of the Revolution; director generals and sub-director generals and higher of all Cuban ministries and state agencies; employees of the Ministry of the Interior (MININT); employees of the Ministry of Defense (MINFAR); secretaries and first secretaries of the Confederation of Labor of Cuba (CTC) and its component unions; chief editors, editors, and deputy editors of Cuban state-run media organizations and programs, including newspapers, television, and radio; or members and employees of the Supreme Court (Tribuno Supremo Nacional).

Ineligible Cuban Communist Party Officials. Members of the Politburo; the Central Committee; department heads of the Central Committee; employees of the Central Committee; and the secretaries and first secretaries of provincial Party central committees.

Prohibitions (130)

Coins; banknotes; currency notes; securities payable to bearer; manufactured and unmanufactured platinum, gold, and silver; precious stones; jewelry; and other valuable articles.

Musical letters or cards that play a sound recording when opened.

Perishable infectious biological substances.

Perishable noninfectious biological substances.

Radioactive materials.

Restrictions

Currency, postage stamps for sale or exchange, checks, securities, and other financial instruments must be licensed by the U.S. Treasury Department.

All items not subject to the above rules for gift parcels, humanitarian donations, and consumer communications devices, computers, and software must be licensed or otherwise authorized by the U.S. Commerce Department and/or the U.S. Treasury Department.

Observations

1. Items not eligible for import into Cuba may be confiscated upon entering Cuba or returned to sender.
2. Customers mailing consumer communications devices, computers, and software to Cuba are required to file electronic export information via the Census Bureau's Automated Export System or AES*Direct* Web site prior to mailing (see 520) except when such articles are included in a gift parcel item. Customers are not required to make such a filing for gift parcels and humanitarian donations as described above.

Customs Forms Required (123)

First-Class Mail International items and Priority Mail International Flat Rate Envelopes and Small Flat Rate Priced Boxes:
PS Form 2976 (see 123.61)

Global Express Guaranteed (210)

Not Available

Express Mail International (220)

Not Available

Priority Mail International (230) Price Group 9

Available only for Priority Mail International Flat Rate Envelope and Small Flat Rate Priced Boxes.

Flat Rate Envelopes or Small Flat Rate Priced Boxes: The maximum weight is 4 pounds. Refer to Notice 123, *Price List*, for the applicable retail, commercial base, or commercial plus price.

Insurance (232.92) NOT Available

First-Class Mail International (240) Price Group 9

For the prices and maximum weights for letters, large envelopes (flats), packages (small packets), and postcards, see Notice 123, *Price List*.

Size Limits

Letters: See 241.212
Postcards: See 241.221
Large Envelopes (Flats): See 241.232
Packages (Small Packets): See 241.242 and 241.243

Airmail M-bags (260) — Direct Sack to One Addressee Price Group 9

Refer to Notice 123, *Price List*, for the applicable retail, commercial base, or commercial plus price.
Weight Limit: 66 lbs.

Matter for the Blind (270)

Free when sent as First-Class Mail International, including Priority Mail International Flat Rate Envelopes and Small Flat Rate Priced Boxes. Weight limit: 4 pounds.

Free when sent as Priority Mail International. Weight limit: 15 pounds.

Extra Services

Certificate of Mailing (313)

Individual Pieces	Fee
Individual article (PS Form 3817)	$1.15
Firm mailing books (PS Form 3877), per article listed (minimum 3)	0.44
Duplicate copy of PS Form 3817 or PS Form 3877 (per page)	1.15
Bulk Quantities	**Fee**
First 1,000 pieces (or fraction thereof)	$6.70
Each additional 1,000 pieces (or fraction thereof)	0.80
Duplicate copy of PS Form 3606	1.15

COD and Certified

NOT for International Mail

International Business Reply Service (382)

Fee: Envelopes up to 2 ounces $1.50; Cards $1.00

International Postal Money Order (371)

NOT Available

International Reply Coupons (381)

Fee: $2.20

Registered Mail (330)

Fee: $11.75

Maximum Indemnity: $47.33
Available for First-Class Mail International, including postcards and Flat Rate Envelopes and Small Flat Rate Priced Boxes, and matter for the blind or other physically handicapped persons. Not applicable to M-bags.

Restricted Delivery (350)

NOT Available

Return Receipt (340)

Fee: $2.35

Available for registered mail only.

Cyprus

Country Conditions for Mailing

Prohibitions (130)

Books or other publications giving instructions regarding the construction, operation, maintenance, or care of any prohibited firearm, other than a harpoon gun used for fishing purposes, and excluding books and publications imported by the Cyprus Police Force or any Cyprus Department of Government.
Daggers.
Explosives and flammable substances.
Leeches and silkworms.
Postcards of private manufacture having illustrated designs not previously approved by the Cyprus Post Office.
Radioactive materials.
Rifles and repeating firearms.
Seditious publications.

Restrictions

Articles for the manufacture of cigarettes require permission of the Cyprus customs authorities.
Bees, honey and substances containing uncooked honey require permission of the Ministry of Agriculture.
Rags and used clothing require a permit from the Cyprus Ministry of Health.
Registered items containing coins; banknotes; currency notes or securities of any kind payable to bearer; traveler's checks; manufactured or unmanufactured platinum, gold, or silver; or precious stones, jewelry, or other valuable articles are admitted only under a license from the Cyprus Central Bank.

Observations

Commercial shipments must be accompanied by relevant invoices, attached to the outside of the item, preferably in an unsealed envelope.

Customs Forms Required (123)

First-Class Mail International items and Priority Mail International Flat Rate Envelopes and Small Flat Rate Priced Boxes:
PS Form 2976 (see 123.61)
Priority Mail International parcels:
PS Form 2976-A inside 2976-E (envelope)

Global Express Guaranteed (210) Price Group 6

Refer to Notice 123, *Price List*, for the applicable retail, commercial base, or commercial plus price.
Weight Limit: 70 lbs.

Insurance (212.5)

Insured Amount not over	Fee	Insured Amount not over	Fee
$100	No Fee	For document reconstruction insurance or non-document insurance coverage above $800, add $1.00 per $100 or fraction thereof, up to a maximum of $2,499 per shipment.	
200	$1.00		
300	2.00		
400	3.00		
500	4.00		
600	5.00		
700	6.00		
800	7.00	$2,499 max.	$24.00

Value Limit (212.1)

The maximum value of a GXG shipment to this country is $2,499 or a lesser amount if limited by content or value.

Size Limits (211.22)

The surface area of the address side of the item to be mailed must be large enough to completely contain the Global Express Guaranteed Air Waybill/Shipping Invoice (shipping label), postage, endorsement, and any applicable markings. The shipping label is approximately 5.5 inches high and 9.5 inches long.
Maximum length: 46 inches
Maximum width: 35 inches
Maximum height: 46 inches
Maximum length and girth combined: 108 inches

General Conditions for Mailing

See Publication 141, *Global Express Guaranteed Service Guide,* for information about areas served in the destination country, allowable contents, packaging and labeling requirements, tracking and tracing, service standards, and other conditions for mailing.

Express Mail International (220) Price Group 4

Refer to Notice 123, *Price List*, for the applicable retail, commercial base, or commercial plus price.
Weight Limit: 70 lbs.

Express Mail International — Flat Rate Envelope and Flat Rate Boxes

The maximum weight for the Express Mail International Flat Rate Envelope and the Express Mail International Flat Rate Boxes is 20 pounds. Refer to Notice 123, *Price List*, for the applicable retail, commercial base, or commercial plus price.

Insurance (222.8)

Available for **Express Mail International merchandise shipments** only

Insured Amount not over	Fee	Insured Amount not over	Fee
$100	No Fee	For insurance coverage above $2,000, add $1.50 for each $500 or fraction thereof, up to a maximum of $5,000 per shipment.	
200	$0.85		
500	2.35		
1,000	3.85		
1,500	5.35		
2,000	6.85	$5,000 max.	$15.85

Articles Admitted	Required Customs Form/Endorsement
Correspondence, business papers, and computer data.	PS Form 2976, *Customs — CN 22 and Sender's Declaration.* Endorse item clearly next to mailing label as BUSINESS PAPERS.
Merchandise samples without commercial value.	PS Form 2976-A, *Customs Declaration and Dispatch Note CP 72,* inside a PS Form 2976-E, *Customs Declaration Envelope CP 91.* Endorse item clearly next to mailing label as COMMERICAL SAMPLES.
Merchandise and all articles subject to customs duty.	PS Form 2976-A, *Customs Declaration and Dispatch Note CP 72,* inside a PS Form 2976-E, *Customs Declaration Envelope CP 91.* A commercial invoice must be attached to the outside of all commercial shipments.

Size Limits (221.52)
Maximum length: 36 inches
Maximum length and girth combined: 79 inches

Note:
Coins; banknotes; currency notes, including paper money; securities of any kind payable to bearer; traveler's checks; platinum, gold, and silver; precious stones; jewelry; watches; and other valuable articles are prohibited in Express Mail International shipments to Cyprus.

Reciprocal Service Name: Datapost/Special Express

Country Code: CY

Areas Served: All

Priority Mail International (230) Price Group 4

Refer to Notice 123, *Price List*, for the applicable retail, commercial base, or commercial plus price.
Weight Limit: 70 lbs.

Note: *Ordinary Priority Mail International includes indemnity at no cost based on weight. (See 230.)*

Priority Mail International — Flat Rate
Flat Rate Envelopes or Small Flat Rate Priced Boxes: The maximum weight is 4 pounds. Refer to Notice 123, *Price List*, for the applicable retail, commercial base, or commercial plus price.

Flat Rate Boxes — Medium and Large: The maximum weight is 20 pounds, or the limit set by the individual country, whichever is less. Refer to Notice 123, *Price List*, for the retail, commercial base, or commercial plus price.

Insurance (232.92)
Available for **Priority Mail International merchandise parcels** only (see 323.72 for markings)

Insured Amount not over	Fee	Insured Amount not over	Fee
$50	$2.45		
100	3.60	Add $1.15 for each additional $100 or fraction of insurance coverage.	
200	4.75		
300	5.90		
400	7.05		
500	8.20	$5,000 max.	$59.95

Size Limits (231.22)
Maximum length: 42 inches
Maximum length and girth combined: 79 inches

First-Class Mail International (240) Price Group 4
For the prices and maximum weights for letters, large envelopes (flats), packages (small packets), and postcards, see Notice 123, *Price List*.

Size Limits
Letters: See 241.212
Postcards: See 241.221
Large Envelopes (Flats): See 241.232
Packages (Small Packets): See 241.242 and 241.243

Airmail M-bags (260) — Direct Sack to One Addressee Price Group 4

Refer to Notice 123, *Price List*, for the applicable retail, commercial base, or commercial plus price.
Weight Limit: 66 lbs.

Matter for the Blind (270)
Free when sent as First-Class Mail International, including Priority Mail International Flat Rate Envelopes and Small Flat Rate Priced Boxes. Weight limit: 4 pounds.
Free when sent as Priority Mail International. Weight limit: 15 pounds.

Extra Services

Certificate of Mailing (313)

Individual Pieces	Fee
Individual article (PS Form 3817)	$1.15
Firm mailing books (PS Form 3877), per article listed (minimum 3)	0.44
Duplicate copy of PS Form 3817 or PS Form 3877 (per page)	1.15
Bulk Quantities	**Fee**
First 1,000 pieces (or fraction thereof)	$6.70
Each additional 1,000 pieces (or fraction thereof)	0.80
Duplicate copy of PS Form 3606	1.15

COD and Certified **NOT** for International Mail

International Business Reply Service (382)
Fee: Envelopes up to 2 ounces $1.50; Cards $1.00

International Postal Money Order (371)
NOT Available

International Reply Coupons (381) **Fee:** $2.20

Registered Mail (330) **Fee:** $11.75
Maximum Indemnity: $47.33
Available for First-Class Mail International, including postcards and Flat Rate Envelopes and Small Flat Rate Priced Boxes, and matter for the blind or other physically handicapped persons. Not applicable to M-bags.

Restricted Delivery (350) **Fee:** $4.55
Available for registered mail with a return receipt.
Endorsements: A remettre en main propre.

Return Receipt (340) **Fee:** $2.35
Available for registered mail and insured Priority Mail International parcels only.

Czech Republic

Country Conditions for Mailing

Prohibitions (130)

Chain letter items.
Perishable infectious substances.
Perishable noninfectious substances.
Publications, drawings, photographs, records, sheets of music, etc., contrary to the State public order.
Radioactive materials.

Restrictions

Coins; paper money; securities and other paper values of any kind; as well as savings-bank booklets; and unmanufactured gold, silver, and platinum may be imported only by authorization of the State Bank.
Gift shipments must be sent by private individuals. Those sent by commercial firms are not admitted.
Import permits are required for gift shipments exceeding three per year for one addressee, or for any shipment exceeding 3,000 Czech Republic crowns in value. Permits may be issued to addressees or withheld at the discretion of the customs authorities after the shipment arrives.
Medicines are admitted provided the addressee is in possession of an import permit granted by the Czech Republic health authorities.
Philatelic articles and stamps exchanged between member philatelists must not exceed 1,000 Czech Republic crowns in any calendar year. Gift packages containing philatelic articles are restricted to 3 per year and the shipment cannot exceed a total of 100 stamps or philatelic articles and 100 Czech Republic crowns in value.

Observations

1. Import licenses and quantity restrictions are applicable for many articles sent to the Czech Republic. Therefore, senders should ascertain from the addressee before mailing whether the contents are permitted and whether the necessary documents are held.
2. Gift shipments for the personal use of the addressee or the addressee's family do not require an import permit if the contents do not exceed 5,000 Czech Republic crowns. When the total exceeds 2,000 Czech Republic crowns, the addressee must provide a gift certificate authenticated by an authorized agent in that country. Czech Republic customs decides the value of the contents on the basis of internal prices of identical articles.
3. Articles imported in postal items are exempt from customs duties if their total value does not exceed 300 Czech Republic crowns.

Customs Forms Required (123)

First-Class Mail International items and Priority Mail International Flat Rate Envelopes and Small Flat Rate Priced Boxes:
PS Form 2976 (see 123.61)
Priority Mail International parcels:
PS Form 2976-A inside 2976-E (envelope)

Global Express Guaranteed (210) Price Group 4

Refer to Notice 123, *Price List*, for the applicable retail, commercial base, or commercial plus price.
Weight Limit: 70 lbs.

Insurance (212.5)

Insured Amount not over	Fee	Insured Amount not over	Fee
$100	No Fee	For document reconstruction insurance or non-document insurance coverage above $800, add $1.00 per $100 or fraction thereof, up to a maximum of $2,499 per shipment.	
200	$1.00		
300	2.00		
400	3.00		
500	4.00		
600	5.00		
700	6.00		
800	7.00	$2,499 max.	$24.00

Value Limit (212.1)

The maximum value of a GXG shipment to this country is $2,499 or a lesser amount if limited by content or value.

Size Limits (211.22)

The surface area of the address side of the item to be mailed must be large enough to completely contain the Global Express Guaranteed Air Waybill/Shipping Invoice (shipping label), postage, endorsement, and any applicable markings. The shipping label is approximately 5.5 inches high and 9.5 inches long.
Maximum length: 46 inches
Maximum width: 35 inches
Maximum height: 46 inches
Maximum length and girth combined: 108 inches

General Conditions for Mailing

See Publication 141, *Global Express Guaranteed Service Guide,* for information about areas served in the destination country, allowable contents, packaging and labeling requirements, tracking and tracing, service standards, and other conditions for mailing.

Express Mail International (220) Price Group 4

Refer to Notice 123, *Price List*, for the applicable retail, commercial base, or commercial plus price.
Weight Limit: 70 lbs.

Express Mail International — Flat Rate Envelope and Flat Rate Boxes

The maximum weight for the Express Mail International Flat Rate Envelope and the Express Mail International Flat Rate Boxes is 20 pounds. Refer to Notice 123, *Price List*, for the applicable retail, commercial base, or commercial plus price.

Insurance (222.8)

Available for **Express Mail International merchandise shipments** only

Insured Amount not over	Fee	Insured Amount not over	Fee
$100	No Fee	For insurance coverage above $2,000, add $1.50 for each $500 or fraction thereof, up to a maximum of $5,000 per shipment.	
200	$0.85		
500	2.35		
1,000	3.85		
1,500	5.35		
2,000	6.85	$5,000 max.	$15.85

Articles Admitted	Required Customs Form/Endorsement
Correspondence and business papers.	PS Form 2976, *Customs — CN 22 and Sender's Declaration.* Endorse item clearly next to mailing label as BUSINESS PAPERS.
Merchandise samples without commercial value.	PS Form 2976, *Customs — CN 22 and Sender's Declaration.*
Merchandise and all articles subject to customs duty.	PS Form 2976-A, *Customs Declaration and Dispatch Note CP 72,* inside a PS Form 2976-E, *Customs Declaration Envelope CP 91.*

Size Limits (221.52)
Maximum length: 60 inches
Maximum length and girth combined: 108 inches

Note:
Coins; banknotes; currency notes, including paper money; securities of any kind payable to bearer; traveler's checks; platinum, gold, and silver; precious stones; jewelry; watches; and other valuable articles are prohibited in Express Mail International shipments to the Czech Republic.

Reciprocal Service Name: Zrychlena Posta/EMS

Country Code: CZ

Areas Served: All

Priority Mail International (230) Price Group 4

Refer to Notice 123, *Price List*, for the applicable retail, commercial base, or commercial plus price.
Weight Limit: 70 lbs.

Note: *Ordinary Priority Mail International includes indemnity at no cost based on weight. (See 230.)*

Priority Mail International — Flat Rate
Flat Rate Envelopes or Small Flat Rate Priced Boxes: The maximum weight is 4 pounds. Refer to Notice 123, *Price List*, for the applicable retail, commercial base, or commercial plus price.

Flat Rate Boxes — Medium and Large: The maximum weight is 20 pounds, or the limit set by the individual country, whichever is less. Refer to Notice 123, *Price List*, for the retail, commercial base, or commercial plus price.

Insurance (232.92)
Available for **Priority Mail International merchandise parcels** only (see 323.72 for markings)

Insured Amount not over	Fee	Insured Amount not over	Fee
$50	$2.45		
100	3.60	Add $1.15 for each additional $100 or fraction of insurance coverage.	
200	4.75		
300	5.90		
400	7.05		
500	8.20	$5,000 max.	$59.95

Size Limits (231.22)
Maximum length: 60 inches
Maximum length and girth combined: 108 inches

First-Class Mail International (240) Price Group 4
For the prices and maximum weights for letters, large envelopes (flats), packages (small packets), and postcards, see Notice 123, *Price List*.

Size Limits
Letters: See 241.212
Postcards: See 241.221
Large Envelopes (Flats): See 241.232
Packages (Small Packets): See 241.242 and 241.243

Airmail M-bags (260) — Direct Sack to One Addressee Price Group 4

Refer to Notice 123, *Price List*, for the applicable retail, commercial base, or commercial plus price.
Weight Limit: 66 lbs.

Matter for the Blind (270)
Free when sent as First-Class Mail International, including Priority Mail International Flat Rate Envelopes and Small Flat Rate Priced Boxes. Weight limit: 4 pounds.
Free when sent as Priority Mail International. Weight limit: 15 pounds.

Extra Services

Certificate of Mailing (313)

Individual Pieces	Fee
Individual article (PS Form 3817)	$1.15
Firm mailing books (PS Form 3877), per article listed (minimum 3)	0.44
Duplicate copy of PS Form 3817 or PS Form 3877 (per page)	1.15
Bulk Quantities	**Fee**
First 1,000 pieces (or fraction thereof)	$6.70
Each additional 1,000 pieces (or fraction thereof)	0.80
Duplicate copy of PS Form 3606	1.15

COD and Certified **NOT** for International Mail

International Business Reply Service (382)
Fee: Envelopes up to 2 ounces $1.50; Cards $1.00

International Postal Money Order (371)
NOT Available

International Reply Coupons (381) **Fee:** $2.20

Registered Mail (330) **Fee:** $11.75
Maximum Indemnity: $47.33
Available for First-Class Mail International, including postcards and Flat Rate Envelopes and Small Flat Rate Priced Boxes, and matter for the blind or other physically handicapped persons. Not applicable to M-bags.

Restricted Delivery (350) **Fee:** $4.55
Available for registered mail with a return receipt.
Endorsements: A remettre en main propre.

Return Receipt (340) **Fee:** $2.35
Available for registered mail and insured Priority Mail International parcels only.

Denmark

Country Conditions for Mailing

Prohibitions (130)

Almanacs (except for single copies) that do not bear the University almanac stamp.
Arms, weapons, and firearms, including air rifles, airsoft guns, gun barrels, breeches, cross bows; knives of any kind with blades of more than 12 cm (approximately 4.7 in.); switch-blade knives, push daggers, thrusting, or stabbing weapons regardless of blade length; knuckledusters, truncheons, clubs, and other similar articles.
Dried or powdered milk, and food mixtures containing it.
Fine-cut tobacco in small packages to which cigarette papers are attached.
Human remains.
Lighters utilizing a catalyst for ignition.
Live plants and animals.
Radioactive materials.

Restrictions

Danish and foreign stocks, bonds, and coupons may not be imported unless the addressee possesses a permit issued by the National Bank of Denmark.
Medicines may be imported in amounts costing less than 100 Danish kroner only by pharmacists, laboratories recognized by the State, or authorized dealers.

Observations

1. A parcel may be addressed to a street address or to a post office box. A local telephone number for the addressee should be provided when the item is addressed to a street address and must be provided when the item is addressed to a post office box.
2. For parcels, an invoice, in duplicate, is required for all commercial shipments regardless of value and all personal shipments valued at $300 or more. The invoices must be affixed to the outside of the parcel or may be enclosed in PS Form 2976-E with the customs declaration.

Customs Forms Required (123)

First-Class Mail International items and Priority Mail International Flat Rate Envelopes and Small Flat Rate Priced Boxes:
PS Form 2976 (see 123.61)
Priority Mail International parcels:
PS Form 2976-A inside 2976-E (envelope)

Global Express Guaranteed (210) Price Group 5

Refer to Notice 123, *Price List*, for the applicable retail, commercial base, or commercial plus price.
Weight Limit: 70 lbs.

Insurance (212.5)

Insured Amount not over	Fee	Insured Amount not over	Fee
$100	No Fee	For document reconstruction insurance or non-document insurance coverage above $800, add $1.00 per $100 or fraction thereof, up to a maximum of $2,499 per shipment.	
200	$1.00		
300	2.00		
400	3.00		
500	4.00		
600	5.00		
700	6.00		
800	7.00	$2,499 max.	$24.00

Value Limit (212.1)

The maximum value of a GXG shipment to this country is $2,499 or a lesser amount if limited by content or value.

Size Limits (211.22)

The surface area of the address side of the item to be mailed must be large enough to completely contain the Global Express Guaranteed Air Waybill/Shipping Invoice (shipping label), postage, endorsement, and any applicable markings. The shipping label is approximately 5.5 inches high and 9.5 inches long.
Maximum length: 46 inches
Maximum width: 35 inches
Maximum height: 46 inches
Maximum length and girth combined: 108 inches

General Conditions for Mailing

See Publication 141, *Global Express Guaranteed Service Guide,* for information about areas served in the destination country, allowable contents, packaging and labeling requirements, tracking and tracing, service standards, and other conditions for mailing.

Express Mail International (220) Price Group 5

Refer to Notice 123, *Price List*, for the applicable retail, commercial base, or commercial plus price.
Weight Limit: 66 lbs.

Express Mail International — Flat Rate Envelope and Flat Rate Boxes

The maximum weight for the Express Mail International Flat Rate Envelope and the Express Mail International Flat Rate Boxes is 20 pounds. Refer to Notice 123, *Price List*, for the applicable retail, commercial base, or commercial plus price.

Insurance (222.8)

Available for **Express Mail International merchandise shipments** only

Insured Amount not over	Fee
$100	No Fee
200	$0.85
500	2.35
650 max.	3.85

Articles Admitted	Required Customs Form/Endorsement
Business papers.	No form required. Endorse item clearly next to mailing label as BUSINESS PAPERS.
Merchandise samples without commercial value and articles valued under U.S. $100.	PS Form 2976, *Customs — CN 22 and Sender's Declaration.*
Merchandise and all articles subject to customs duty.	PS Form 2976-A, *Customs Declaration and Dispatch Note CP 72,* inside a PS Form 2976-E, *Customs Declaration Envelope CP 91.* An invoice, in duplicate, is required for all commercial shipments regardless of value and all personal shipments valued at $300 or more. The invoices must be either affixed to the outside of the parcel or enclosed in PS Form 2976-E with the customs declaration.

Size Limits (221.52)
Maximum length: 60 inches
Maximum length and girth combined: 108 inches

Notes:
1. An invoice, in duplicate, is required for all commercial shipments regardless of value and for all personal shipments valued at $300 or more. The invoices must be either affixed to the outside of the parcel or enclosed in PS Form 2976-E with the customs declaration.
2. Arms, weapons, and human remains are prohibited.
3. Coins; banknotes; currency notes, including paper money; securities of any kind payable to bearer; traveler's checks; platinum, gold, and silver; precious stones; jewelry; watches; and other valuable articles are prohibited in Express Mail International shipments to Denmark.
4. An Express Mail International shipment may be addressed to a street address or to a post office box. A local telephone number for the addressee should be provided when the item is addressed to a street address and must be provided when the item is addressed to a post office box.

Reciprocal Service Name: There is no reciprocal service.

Country Code: DK

Areas Served:
All locations in Denmark

Priority Mail International (230) Price Group 5

Refer to Notice 123, *Price List*, for the applicable retail, commercial base, or commercial plus price.
Weight Limit: 66 lbs.

Note: *Ordinary Priority Mail International includes indemnity at no cost based on weight. (See 230.)*

Priority Mail International — Flat Rate
Flat Rate Envelopes or Small Flat Rate Priced Boxes: The maximum weight is 4 pounds. Refer to Notice 123, *Price List*, for the applicable retail, commercial base, or commercial plus price.

Flat Rate Boxes — Medium and Large: The maximum weight is 20 pounds, or the limit set by the individual country, whichever is less. Refer to Notice 123, *Price List*, for the retail, commercial base, or commercial plus price.

Insurance (232.92)
Available for **Priority Mail International merchandise parcels** only (see 323.72 for markings)

Insured Amount not over	Fee
$50	$2.45
100	3.60
200	4.75
300	5.90
400	7.05
500	8.20
600	9.35
650 max.	10.50

Size Limits (231.22)
Maximum length: 60 inches
Maximum length and girth combined: 108 inches

First-Class Mail International (240) Price Group 5
For the prices and maximum weights for letters, large envelopes (flats), packages (small packets), and postcards, see Notice 123, *Price List*.

Size Limits
Letters: See 241.212
Postcards: See 241.221
Large Envelopes (Flats): See 241.232
Packages (Small Packets): See 241.242 and 241.243

Airmail M-bags (260) — Direct Sack to One Addressee Price Group 5

Refer to Notice 123, *Price List*, for the applicable retail, commercial base, or commercial plus price.
Weight Limit: 66 lbs.

Matter for the Blind (270)
Free when sent as First-Class Mail International, including Priority Mail International Flat Rate Envelopes and Small Flat Rate Priced Boxes. Weight limit: 4 pounds.
Free when sent as Priority Mail International. Weight limit: 15 pounds.

Extra Services

Certificate of Mailing (313)

Individual Pieces	Fee
Individual article (PS Form 3817)	$1.15
Firm mailing books (PS Form 3877), per article listed (minimum 3)	0.44
Duplicate copy of PS Form 3817 or PS Form 3877 (per page)	1.15
Bulk Quantities	**Fee**
First 1,000 pieces (or fraction thereof)	$6.70
Each additional 1,000 pieces (or fraction thereof)	0.80
Duplicate copy of PS Form 3606	1.15

COD and Certified **NOT** for International Mail

International Business Reply Service (382)
Fee: Envelopes up to 2 ounces $1.50; Cards $1.00

International Postal Money Order (371)
NOT Available

International Reply Coupons (381) **Fee:** $2.20

Registered Mail (330) **Fee:** $11.75
Maximum Indemnity: $47.33
Available for First-Class Mail International, including postcards and Flat Rate Envelopes and Small Flat Rate Priced Boxes, and matter for the blind or other physically handicapped persons. Not applicable to M-bags.

Restricted Delivery (350) **Fee:** $4.55
Available for registered mail with a return receipt.
Endorsements: A remettre en main propre.

Return Receipt (340) **Fee:** $2.35
Available for registered mail and insured Priority Mail International parcels only.

Djibouti

Country Conditions for Mailing

Prohibitions (130)
Perishable infectious biological substances.
Radioactive materials.

Restrictions
Paper money and other instruments of payment; letters of credit; securities; or deeds must be accompanied by a permit issued by the French exchange-control authorities, or imported by a bank.

Observations
None

Global Express Guaranteed (210) Price Group 4

Refer to Notice 123, *Price List*, for the applicable retail, commercial base, or commercial plus price.
Weight Limit: 70 lbs.

Insurance (212.5)

Insured Amount not over	Fee	Insured Amount not over	Fee
$100	No Fee	For document reconstruction insurance or non-document insurance coverage above $800, add $1.00 per $100 or fraction thereof, up to a maximum of $2,499 per shipment.	
200	$1.00		
300	2.00		
400	3.00		
500	4.00		
600	5.00		
700	6.00		
800	7.00	$2,499 max.	$24.00

Value Limit (212.1)
The maximum value of a GXG shipment to this country is $2,499 or a lesser amount if limited by content or value.

Size Limits (211.22)
The surface area of the address side of the item to be mailed must be large enough to completely contain the Global Express Guaranteed Air Waybill/Shipping Invoice (shipping label), postage, endorsement, and any applicable markings. The shipping label is approximately 5.5 inches high and 9.5 inches long.
Maximum length: 46 inches
Maximum width: 35 inches
Maximum height: 46 inches
Maximum length and girth combined: 108 inches

General Conditions for Mailing
See Publication 141, *Global Express Guaranteed Service Guide,* for information about areas served in the destination country, allowable contents, packaging and labeling requirements, tracking and tracing, service standards, and other conditions for mailing.

Express Mail International (220) Price Group 7

Refer to Notice 123, *Price List*, for the applicable retail, commercial base, or commercial plus price.
Weight Limit: 44 lbs.

Express Mail International — Flat Rate Envelope and Flat Rate Boxes
The maximum weight for the Express Mail International Flat Rate Envelope and the Express Mail International Flat Rate Boxes is 20 pounds. Refer to Notice 123, *Price List*, for the applicable retail, commercial base, or commercial plus price.

Insurance (222.8)
Available for **Express Mail International merchandise shipments** only

Insured Amount not over	Fee	Insured Amount not over	Fee
$100	No Fee	For insurance coverage above $2,000, add $1.50 for each $500 or fraction thereof, up to a maximum of $5,000 per shipment.	
200	$0.85		
500	2.35		
1,000	3.85		
1,500	5.35		
2,000	6.85	$5,000 max.	$15.85

Articles Admitted	Required Customs Form/Endorsement
Correspondence, business papers, and computer data.	No forms required. Endorse item clearly next to mailing label as BUSINESS PAPERS.
Merchandise samples without commercial value.	PS Form 2976-A, *Customs Declaration and Dispatch Note CP 72,* inside a PS Form 2976-E, *Customs Declaration Envelope CP 91*.
Merchandise and all articles subject to customs duty.	PS Form 2976-A, *Customs Declaration and Dispatch Note CP 72,* inside a PS Form 2976-E, *Customs Declaration Envelope CP 91*.

Size Limits (221.52)
Maximum length: 36 inches
Maximum length and girth combined: 79 inches

Note:
Coins; banknotes; currency notes, including paper money; securities of any kind payable to bearer; traveler's checks; platinum, gold, and silver; precious stones; jewelry; watches; and other valuable articles are prohibited in Express Mail International shipments to Djibouti.

Reciprocal Service Name: E.M.S. Djib Express

Country Code: DJ

Areas Served: All

Priority Mail International (230) Price Group 7

Refer to Notice 123, *Price List*, for the applicable retail, commercial base, or commercial plus price.
Weight Limit: 44 lbs.

Note: *Ordinary Priority Mail International includes indemnity at no cost based on weight. (See 230.)*

Priority Mail International — Flat Rate
Flat Rate Envelopes or Small Flat Rate Priced Boxes: The maximum weight is 4 pounds. Refer to Notice 123, *Price List*, for the applicable retail, commercial base, or commercial plus price.

Flat Rate Boxes — Medium and Large: The maximum weight is 20 pounds, or the limit set by the individual country, whichever is less. Refer to Notice 123, *Price List*, for the retail, commercial base, or commercial plus price.

Insurance (232.92)

Available for **Priority Mail International merchandise parcels** only (see 323.72 for markings)

Insured Amount not over	Fee	Insured Amount not over	Fee
$50	$2.45		
100	3.60	Add $1.15 for each additional $100 or fraction of insurance coverage.	
200	4.75		
300	5.90		
400	7.05		
500	8.20	$880 max.	$12.80

Size Limits (231.22)

Maximum length: 42 inches
Maximum length and girth combined: 79 inches

First-Class Mail International (240) Price Group 7

For the prices and maximum weights for letters, large envelopes (flats), packages (small packets), and postcards, see Notice 123, *Price List*.

Size Limits

Letters: See 241.212
Postcards: See 241.221
Large Envelopes (Flats): See 241.232
Packages (Small Packets): See 241.242 and 241.243

Airmail M-bags (260) — Direct Sack to One Addressee Price Group 7

Refer to Notice 123, *Price List*, for the applicable retail, commercial base, or commercial plus price.
Weight Limit: 66 lbs.

Matter for the Blind (270) NOT Available

Extra Services

Certificate of Mailing (313)

Individual Pieces	Fee
Individual article (PS Form 3817)	$1.15
Firm mailing books (PS Form 3877), per article listed (minimum 3)	0.44
Duplicate copy of PS Form 3817 or PS Form 3877 (per page)	1.15
Bulk Quantities	**Fee**
First 1,000 pieces (or fraction thereof)	$6.70
Each additional 1,000 pieces (or fraction thereof)	0.80
Duplicate copy of PS Form 3606	1.15

COD and Certified **NOT** for International Mail

International Business Reply Service (382)

Fee: Envelopes up to 2 ounces $1.50; Cards $1.00

International Postal Money Order (371)

NOT Available

International Reply Coupons (381) **Fee:** $2.20

Registered Mail (330) **Fee:** $11.75

Maximum Indemnity: $47.33
Available for First-Class Mail International, including postcards and Flat Rate Envelopes and Small Flat Rate Priced Boxes, and matter for the blind or other physically handicapped persons. Not applicable to M-bags.

Restricted Delivery (350) NOT Available

Return Receipt (340) **Fee:** $2.35

Available for registered mail and insured Priority Mail International parcels only.

Dominica

Country Conditions for Mailing

Prohibitions (130)
Coins.
Perishable infectious biological substances.
Radioactive materials.

Restrictions
No list furnished.

Observations
None

Customs Forms Required (123)
First-Class Mail International items and Priority Mail International Flat Rate Envelopes and Small Flat Rate Priced Boxes:
PS Form 2976 (see 123.61)
Priority Mail International parcels:
PS Form 2976-A inside 2976-E (envelope)

Global Express Guaranteed (210) Price Group 7

Refer to Notice 123, *Price List*, for the applicable retail, commercial base, or commercial plus price.

Weight Limit: 70 lbs.

Insurance (212.5)

Insured Amount not over	Fee	Insured Amount not over	Fee
$100	No Fee	For document reconstruction insurance or non-document insurance coverage above $800, add $1.00 per $100 or fraction thereof, up to a maximum of $2,499 per shipment.	
200	$1.00		
300	2.00		
400	3.00		
500	4.00		
600	5.00		
700	6.00		
800	7.00	$2,499 max.	$24.00

Value Limit (212.1)
The maximum value of a GXG shipment to this country is $2,499 or a lesser amount if limited by content or value.

Size Limits (211.22)
The surface area of the address side of the item to be mailed must be large enough to completely contain the Global Express Guaranteed Air Waybill/Shipping Invoice (shipping label), postage, endorsement, and any applicable markings. The shipping label is approximately 5.5 inches high and 9.5 inches long.
Maximum length: 46 inches
Maximum width: 35 inches
Maximum height: 46 inches
Maximum length and girth combined: 108 inches

General Conditions for Mailing
See Publication 141, *Global Express Guaranteed Service Guide,* for information about areas served in the destination country, allowable contents, packaging and labeling requirements, tracking and tracing, service standards, and other conditions for mailing.

Express Mail International (220) Price Group 9

Refer to Notice 123, *Price List*, for the applicable retail, commercial base, or commercial plus price.

Weight Limit: 44 lbs.

Express Mail International — Flat Rate Envelope and Flat Rate Boxes
The maximum weight for the Express Mail International Flat Rate Envelope and the Express Mail International Flat Rate Boxes is 20 pounds. Refer to Notice 123, *Price List*, for the applicable retail, commercial base, or commercial plus price.

Insurance (222.8)
Available for **Express Mail International merchandise shipments** only

Insured Amount not over	Fee	Insured Amount not over	Fee
$100	No Fee	For insurance coverage above $2,000, add $1.50 for each $500 or fraction thereof, up to a maximum of $5,000 per shipment.	
200	$0.85		
500	2.35		
1,000	3.85		
1,500	5.35		
2,000	6.85	$5,000 max.	$15.85

Articles Admitted	Required Customs Form/Endorsement
Business correspondence, commercial papers, and documents.	No form required. Next to mailing label, endorse item as BUSINESS PAPERS.
Merchandise samples without commercial value.	PS Form 2976, *Customs — CN 22 and Sender's Declaration.*
Merchandise and all articles subject to customs duty.	PS Form 2976-A, *Customs Declaration and Dispatch Note CP 72,* inside a PS Form 2976-E, *Customs Declaration Envelope CP 91.* An invoice must also be attached to the outside of all commercial shipments.

Size Limits (221.52)
Maximum length: 36 inches
Maximum length and girth combined: 79 inches

Notes:
1. Items are delivered Monday through Saturday. There is no delivery on Sunday or on national holidays.
2. All items that are admissible in international mail service to Dominica, including correspondence, business papers, printed matter items, and merchandise, may also be enclosed in Express Mail International shipments. See Prohibitions and Restrictions under the Country Conditions for Mailing.
3. Coins; banknotes; currency notes, including paper money; securities of any kind payable to bearer; traveler's checks; platinum, gold, and silver; precious stones; jewelry; watches; and other valuable articles are prohibited in Express Mail International shipments that are mailed to Dominica.

Reciprocal Service Name: International Express Mail

Country Code: DM

Areas Served: All

Priority Mail International (230) Price Group 9

Refer to Notice 123, *Price List*, for the applicable retail, commercial base, or commercial plus price.
Weight Limit: 44 lbs.

Note: *Ordinary Priority Mail International includes indemnity at no cost based on weight. (See 230.)*

Priority Mail International — Flat Rate

Flat Rate Envelopes or Small Flat Rate Priced Boxes: The maximum weight is 4 pounds. Refer to Notice 123, *Price List*, for the applicable retail, commercial base, or commercial plus price.

Flat Rate Boxes — Medium and Large: The maximum weight is 20 pounds, or the limit set by the individual country, whichever is less. Refer to Notice 123, *Price List*, for the retail, commercial base, or commercial plus price.

Insurance (232.92) NOT Available

Size Limits (231.22)

Maximum length: 42 inches
Maximum length and girth combined: 79 inches

First-Class Mail International (240) Price Group 9

For the prices and maximum weights for letters, large envelopes (flats), packages (small packets), and postcards, see Notice 123, *Price List*.

Size Limits

Letters: See 241.212
Postcards: See 241.221
Large Envelopes (Flats): See 241.232
Packages (Small Packets): See 241.242 and 241.243

Airmail M-bags (260) — Direct Sack to One Addressee Price Group 9

Refer to Notice 123, *Price List*, for the applicable retail, commercial base, or commercial plus price.
Weight Limit: 66 lbs.

Matter for the Blind (270)

Free when sent as First-Class Mail International, including Priority Mail International Flat Rate Envelopes and Small Flat Rate Priced Boxes. Weight limit: 4 pounds.
Free when sent as Priority Mail International. Weight limit: 15 pounds.

Extra Services

Certificate of Mailing (313)

Individual Pieces	Fee
Individual article (PS Form 3817)	$1.15
Firm mailing books (PS Form 3877), per article listed (minimum 3)	0.44
Duplicate copy of PS Form 3817 or PS Form 3877 (per page)	1.15
Bulk Quantities	**Fee**
First 1,000 pieces (or fraction thereof)	$6.70
Each additional 1,000 pieces (or fraction thereof)	0.80
Duplicate copy of PS Form 3606	1.15

COD and Certified **NOT** for International Mail

International Business Reply Service (382)

Fee: Envelopes up to 2 ounces $1.50; Cards $1.00

International Postal Money Order (371)

Use MO Form MP1
Maximum Amount Available: $700 **Fee:** $4.45
Money Order Inquiry: **Fee:** $5.50

International Reply Coupons (381) **Fee:** $2.20

Registered Mail (330) **Fee:** $11.75

Maximum Indemnity: $47.33
Available for First-Class Mail International, including postcards and Flat Rate Envelopes and Small Flat Rate Priced Boxes, and matter for the blind or other physically handicapped persons. Not applicable to M-bags.

Restricted Delivery (350) NOT Available

Return Receipt (340) **Fee:** $2.35

Available for registered mail only.

Dominican Republic

Country Conditions for Mailing

Prohibitions (130)

Books addressed to bookshops in care of banking institutions.
Coins; banknotes; currency notes; manufactured and unmanufactured platinum, gold, silver; precious stones; jewels; expensive jewelry; and other valuable articles.
Poniards, daggers, stilettos, sticks, or fans with concealed blades or firearms.
Roulette games and other gambling devices.

Restrictions

No list furnished.

Observations

None

Customs Forms Required (123)

First-Class Mail International items and Priority Mail International Flat Rate Envelopes and Small Flat Rate Priced Boxes:
PS Form 2976 (see 123.61)
Priority Mail International parcels:
PS Form 2976-A inside 2976-E (envelope)

Global Express Guaranteed (210) Price Group 7

Refer to Notice 123, *Price List*, for the applicable retail, commercial base, or commercial plus price.
Weight Limit: 70 lbs.

Insurance (212.5)

Insured Amount not over	Fee	Insured Amount not over	Fee
$100	No Fee	For document reconstruction insurance or non-document insurance coverage above $800, add $1.00 per $100 or fraction thereof, up to a maximum of $2,499 per shipment.	
200	$1.00		
300	2.00		
400	3.00		
500	4.00		
600	5.00		
700	6.00		
800	7.00	$2,499 max.	$24.00

Value Limit (212.1)

The maximum value of a GXG shipment to this country is $2,499 or a lesser amount if limited by content or value.

Size Limits (211.22)

The surface area of the address side of the item to be mailed must be large enough to completely contain the Global Express Guaranteed Air Waybill/Shipping Invoice (shipping label), postage, endorsement, and any applicable markings. The shipping label is approximately 5.5 inches high and 9.5 inches long.
Maximum length: 46 inches
Maximum width: 35 inches
Maximum height: 46 inches
Maximum length and girth combined: 108 inches

General Conditions for Mailing

See Publication 141, *Global Express Guaranteed Service Guide,* for information about areas served in the destination country, allowable contents, packaging and labeling requirements, tracking and tracing, service standards, and other conditions for mailing.

Express Mail International (220) Price Group 9

Refer to Notice 123, *Price List*, for the applicable retail, commercial base, or commercial plus price.
Weight Limit: 66 lbs.

Express Mail International — Flat Rate Envelope and Flat Rate Boxes

The maximum weight for the Express Mail International Flat Rate Envelope and the Express Mail International Flat Rate Boxes is 20 pounds. Refer to Notice 123, *Price List*, for the applicable retail, commercial base, or commercial plus price.

Insurance (222.8)

Available for **Express Mail International merchandise shipments** only

Insured Amount not over	Fee	Insured Amount not over	Fee
$100	No Fee	For insurance coverage above $2,000, add $1.50 for each $500 or fraction thereof, up to a maximum of $5,000 per shipment.	
200	$0.85		
500	2.35		
1,000	3.85		
1,500	5.35		
2,000	6.85	$5,000 max.	$15.85

Articles Admitted	Required Customs Form/Endorsement
Correspondence and business papers.	PS Form 2976, *Customs — CN 22 and Sender's Declaration.* Endorse item clearly next to mailing label as BUSINESS PAPERS.
Merchandise samples without commercial value and not subject to customs duty.	PS Form 2976, *Customs — CN 22 and Sender's Declaration.*
Merchandise and all articles subject to customs duty.	PS Form 2976-A, *Customs Declaration and Dispatch Note CP 72,* inside a PS Form 2976-E, *Customs Declaration Envelope CP 91.*

Size Limits (221.52)

Maximum length: 36 inches
Maximum length and girth combined: 79 inches

Note:

Coins; banknotes; currency notes, including paper money; securities of any kind payable to bearer; traveler's checks; platinum, gold, and silver; precious stones; jewelry; watches; and other valuable articles are prohibited in Express Mail International shipments to the Dominican Republic.

Reciprocal Service Name: EMS

Country Code: DO

Areas Served: All

Priority Mail International (230) Price Group 9

Refer to Notice 123, *Price List*, for the applicable retail, commercial base, or commercial plus price.
Weight Limit: 44 lbs.

Note: *Ordinary Priority Mail International includes indemnity at no cost based on weight. (See 230.)*

Priority Mail International — Flat Rate

Flat Rate Envelopes or Small Flat Rate Priced Boxes: The maximum weight is 4 pounds. Refer to Notice 123, *Price List*, for the applicable retail, commercial base, or commercial plus price.

Flat Rate Boxes — Medium and Large: The maximum weight is 20 pounds, or the limit set by the individual country, whichever is less. Refer to Notice 123, *Price List*, for the retail, commercial base, or commercial plus price.

Insurance (232.92) NOT Available

Size Limits (231.22)

Maximum length: 42 inches
Maximum length and girth combined: 79 inches

First-Class Mail International (240) Price Group 9

For the prices and maximum weights for letters, large envelopes (flats), packages (small packets), and postcards, see Notice 123, *Price List*.

Size Limits

Letters: See 241.212
Postcards: See 241.221
Large Envelopes (Flats): See 241.232
Packages (Small Packets): See 241.242 and 241.243

Airmail M-bags (260) — Direct Sack to One Addressee Price Group 9

Refer to Notice 123, *Price List*, for the applicable retail, commercial base, or commercial plus price.
Weight Limit: 66 lbs.

Matter for the Blind (270)

Free when sent as First-Class Mail International, including Priority Mail International Flat Rate Envelopes and Small Flat Rate Priced Boxes. Weight limit: 4 pounds.
Free when sent as Priority Mail International. Weight limit: 15 pounds.

Extra Services

Certificate of Mailing (313)

Individual Pieces	Fee
Individual article (PS Form 3817)	$1.15
Firm mailing books (PS Form 3877), per article listed (minimum 3)	0.44
Duplicate copy of PS Form 3817 or PS Form 3877 (per page)	1.15
Bulk Quantities	**Fee**
First 1,000 pieces (or fraction thereof)	$6.70
Each additional 1,000 pieces (or fraction thereof)	0.80
Duplicate copy of PS Form 3606	1.15

COD and Certified **NOT** for International Mail

International Business Reply Service (382)

Fee: Envelopes up to 2 ounces $1.50; Cards $1.00

International Postal Money Order (371)

Use MO Form MP1
Maximum Amount Available: $700 **Fee:** $4.45
Money Order Inquiry: **Fee:** $5.50

International Reply Coupons (381) **Fee:** $2.20

Registered Mail (330) **Fee:** $11.75

Maximum Indemnity: $47.33
Available for First-Class Mail International, including postcards and Flat Rate Envelopes and Small Flat Rate Priced Boxes, and matter for the blind or other physically handicapped persons. Not applicable to M-bags.

Restricted Delivery (350) **Fee:** $4.55

Available for registered mail with a return receipt.
Endorsements: A remettre en main propre.

Return Receipt (340) **Fee:** $2.35

Available for registered mail only.

Ecuador

Country Conditions for Mailing

Prohibitions (130)

All maps showing the territory of Ecuador with incorrect boundaries.
Bits and mouthpieces made of copper or any alloy containing copper.
Coins, banknotes, currency notes.
Feeding bottles with rubber or glass tube.
Leaf or manufactured tobacco and cigarette paper except with the authorization of the Government.
Leather shoes in general; cloth and rubber shoes.
Perishable infectious biological substances.
Perishable noninfectious biological substances.
Pharmaceutical products and compound medicines whose formula is not known.
Preparations for erasing ink and handwriting.
Roulette games, gambling paraphernalia, labels, imprints.
So-called “Panama” and “Mocora” hats and the straw used for making them.
Uncanceled postage stamps in ordinary mail.
Unrefined salt.
Weapons, sticks, fans, and other objects containing hidden razors, daggers, or firearms.

Restrictions

Any item containing vegetable components in any form whatsoever must be accompanied by a health certificate as prescribed by the internal legislation of Ecuador.
Securities payable to bearer; manufactured and unmanufactured platinum, gold, and silver; precious stones; jewels; jewelry; or other valuable articles may only be sent in Registered Mail.
Used shoes and clothes may be sent, but only in parcels weighing no more than 4 kilos (approximately 8.9 pounds).

Observations

1. Articles valued over 2,000 dollars require 5 copies of the Consular invoice, 3 copies must be countersigned and stamped by the Consul; for the other two copies only the consulate’s official stamp is required. All copies must bear the date of certification and the serial number of the consulate. In the absence of these invoices, shipments are subject to very high customs duty and consular and import duties.
2. Regardless of mail class or contents, items containing goods require a commercial invoice.

Customs Forms Required (123)

First-Class Mail International items and Priority Mail International Flat Rate Envelopes and Small Flat Rate Priced Boxes:
PS Form 2976 (see 123.61)
Priority Mail International parcels:
PS Form 2976-A inside 2976-E (envelope)

Global Express Guaranteed (210) Price Group 8

Refer to Notice 123, *Price List*, for the applicable retail, commercial base, or commercial plus price.
Weight Limit: 70 lbs.

Insurance (212.5)

Insured Amount not over	**Fee**	**Insured Amount** not over	**Fee**
$100	No Fee	For document reconstruction insurance or non-document insurance coverage above $800, add $1.00 per $100 or fraction thereof, up to a maximum of $2,499 per shipment.	
200	$1.00		
300	2.00		
400	3.00		
500	4.00		
600	5.00		
700	6.00		
800	7.00	$2,499 max.	$24.00

Value Limit (212.1)

The maximum value of a GXG shipment to this country is $2,499 or a lesser amount if limited by content or value.

Size Limits (211.22)

The surface area of the address side of the item to be mailed must be large enough to completely contain the Global Express Guaranteed Air Waybill/Shipping Invoice (shipping label), postage, endorsement, and any applicable markings. The shipping label is approximately 5.5 inches high and 9.5 inches long.
Maximum length: 46 inches
Maximum width: 35 inches
Maximum height: 46 inches
Maximum length and girth combined: 108 inches

General Conditions for Mailing

See Publication 141, *Global Express Guaranteed Service Guide,* for information about areas served in the destination country, allowable contents, packaging and labeling requirements, tracking and tracing, service standards, and other conditions for mailing.

Express Mail International (220) Price Group 9

Refer to Notice 123, *Price List*, for the applicable retail, commercial base, or commercial plus price.
Weight Limit: 66 lbs.

Express Mail International — Flat Rate Envelope and Flat Rate Boxes

The maximum weight for the Express Mail International Flat Rate Envelope and the Express Mail International Flat Rate Boxes is 20 pounds. Refer to Notice 123, *Price List*, for the applicable retail, commercial base, or commercial plus price.

Insurance (222.8)

Available for **Express Mail International merchandise shipments** only

Insured Amount not over	**Fee**	**Insured Amount** not over	**Fee**
$100	No Fee	For insurance coverage above $2,000, add $1.50 for each $500 or fraction thereof, up to a maximum of $5,000 per shipment.	
200	$0.85		
500	2.35		
1,000	3.85		
1,500	5.35		
2,000	6.85	$5,000 max.	$15.85

Articles Admitted	Required Customs Form/Endorsement
Correspondence and business papers.	PS Form 2976, *Customs — CN 22 and Sender's Declaration.* Endorse item clearly next to mailing label as BUSINESS PAPERS.
Merchandise samples without commercial value.	PS Form 2976, *Customs — CN 22 and Sender's Declaration.*
Merchandise and all articles subject to customs duty.	PS Form 2976-A, *Customs Declaration and Dispatch Note CP 72,* inside a PS Form 2976-E, *Customs Declaration Envelope CP 91.*

Size Limits (221.52)
Maximum length: 36 inches
Maximum length and girth combined: 79 inches

Note:
Coins; banknotes; currency notes, including paper money; securities of any kind payable to bearer; traveler's checks; platinum, gold, and silver; precious stones; jewelry; watches; and other valuable articles are prohibited in Express Mail International shipments to Ecuador.

Reciprocal Service Name: EMS-Ecuapost

Country Code: EC

Areas Served:
Express Mail International is available ***only*** to the following locations:

Ambato
Cuenca
Guayaquil
Loja
Quito

Priority Mail International (230) Price Group 9

Refer to Notice 123, *Price List*, for the applicable retail, commercial base, or commercial plus price.
Weight Limit: 66 lbs.

Note: *Ordinary Priority Mail International includes indemnity at no cost based on weight. (See 230.)*

Priority Mail International — Flat Rate
Flat Rate Envelopes or Small Flat Rate Priced Boxes: The maximum weight is 4 pounds. Refer to Notice 123, *Price List*, for the applicable retail, commercial base, or commercial plus price.

Flat Rate Boxes — Medium and Large: The maximum weight is 20 pounds, or the limit set by the individual country, whichever is less. Refer to Notice 123, *Price List*, for the retail, commercial base, or commercial plus price.

Insurance (232.92) NOT Available

Size Limits (231.22)
Maximum length: 42 inches
Maximum length and girth combined: 79 inches

First-Class Mail International (240) Price Group 9
For the prices and maximum weights for letters, large envelopes (flats), packages (small packets), and postcards, see Notice 123, *Price List*.

Size Limits
Letters: See 241.212
Postcards: See 241.221
Large Envelopes (Flats): See 241.232
Packages (Small Packets): See 241.242 and 241.243

Airmail M-bags (260) — Direct Sack to One Addressee Price Group 9

Refer to Notice 123, *Price List*, for the applicable retail, commercial base, or commercial plus price.
Weight Limit: 66 lbs.

Matter for the Blind (270)
Free when sent as First-Class Mail International, including Priority Mail International Flat Rate Envelopes and Small Flat Rate Priced Boxes. Weight limit: 4 pounds.
Free when sent as Priority Mail International. Weight limit: 15 pounds.

Extra Services

Certificate of Mailing (313)

Individual Pieces	Fee
Individual article (PS Form 3817)	$1.15
Firm mailing books (PS Form 3877), per article listed (minimum 3)	0.44
Duplicate copy of PS Form 3817 or PS Form 3877 (per page)	1.15
Bulk Quantities	**Fee**
First 1,000 pieces (or fraction thereof)	$6.70
Each additional 1,000 pieces (or fraction thereof)	0.80
Duplicate copy of PS Form 3606	1.15

COD and Certified **NOT** for International Mail

International Business Reply Service (382)
Fee: Envelopes up to 2 ounces $1.50; Cards $1.00

International Postal Money Order (371)
Use MO Form MP1
Maximum Amount Available: $700 **Fee:** $4.45
Money Order Inquiry: **Fee:** $5.50

International Reply Coupons (381) **Fee:** $2.20

Registered Mail (330) **Fee:** $11.75
Maximum Indemnity: $47.33
Available for First-Class Mail International, including postcards and Flat Rate Envelopes and Small Flat Rate Priced Boxes, and matter for the blind or other physically handicapped persons. Not applicable to M-bags.

Restricted Delivery (350) NOT Available

Return Receipt (340) **Fee:** $2.35
Available for registered mail only.

Egypt

Country Conditions for Mailing

Prohibitions (130)

Coins; banknotes; currency notes; securities payable to bearer; travelers' checks; manufactured and unmanufactured platinum, gold, silver; precious stones; jewelry; and other valuable articles unless sent in insured parcels.
Medals resembling Egyptian or foreign currency.
Obscene or immoral books, engravings or printed matter.
Perishable infectious biological substances.
Perishable noninfectious biological substances.
Radioactive materials.

Restrictions

Import permits issued in advance by the appropriate Egyptian authorities are required for gramophone records of Arabic songs, cinema films and recording tapes; medicines, plants and parts of plants.
Minted coins and gold and silver ingots may only be sent in insured parcels.

Observations

1. Import permits are required for all kinds of goods and for gift shipments with a value of more than 20 Egyptian pounds. No import permit is required for items with a value less than 20 Egyptian pounds on condition that they are intended for personal use and have no commercial value.
2. To facilitate customs treatment, all documents (bills, licenses, certificates) should be inserted in each shipment.

Customs Forms Required (123)

First-Class Mail International items and Priority Mail International Flat Rate Envelopes and Small Flat Rate Priced Boxes:
PS Form 2976 (see 123.61)
Priority Mail International parcels:
PS Form 2976-A inside 2976-E (envelope)

Global Express Guaranteed (210) Price Group 6

Refer to Notice 123, *Price List*, for the applicable retail, commercial base, or commercial plus price.
Weight Limit: 70 lbs.

Insurance (212.5)

Insured Amount not over	Fee	Insured Amount not over	Fee
$100	No Fee	For document reconstruction insurance or non-document insurance coverage above $800, add $1.00 per $100 or fraction thereof, up to a maximum of $2,499 per shipment.	
200	$1.00		
300	2.00		
400	3.00		
500	4.00		
600	5.00		
700	6.00		
800	7.00	$2,499 max.	$24.00

Value Limit (212.1)

The maximum value of a GXG shipment to this country is $2,499 or a lesser amount if limited by content or value.

Size Limits (211.22)

The surface area of the address side of the item to be mailed must be large enough to completely contain the Global Express Guaranteed Air Waybill/Shipping Invoice (shipping label), postage, endorsement, and any applicable markings. The shipping label is approximately 5.5 inches high and 9.5 inches long.
Maximum length: 46 inches
Maximum width: 35 inches
Maximum height: 46 inches
Maximum length and girth combined: 108 inches

General Conditions for Mailing

See Publication 141, *Global Express Guaranteed Service Guide,* for information about areas served in the destination country, allowable contents, packaging and labeling requirements, tracking and tracing, service standards, and other conditions for mailing.

Express Mail International (220) Price Group 8

Refer to Notice 123, *Price List*, for the applicable retail, commercial base, or commercial plus price.
Weight Limit: 44 lbs.

Express Mail International — Flat Rate Envelope and Flat Rate Boxes

The maximum weight for the Express Mail International Flat Rate Envelope and the Express Mail International Flat Rate Boxes is 20 pounds. Refer to Notice 123, *Price List*, for the applicable retail, commercial base, or commercial plus price.

Insurance (222.8)

Available for **Express Mail International merchandise shipments** only

Insured Amount not over	Fee	Insured Amount not over	Fee
$100	No Fee	For insurance coverage above $2,000, add $1.50 for each $500 or fraction thereof, up to a maximum of $5,000 per shipment.	
200	$0.85		
500	2.35		
1,000	3.85		
1,500	5.35		
2,000	6.85	$5,000 max.	$15.85

Articles Admitted	Required Customs Form/Endorsement
Correspondence, business papers, and computer printouts.	PS Form 2976, *Customs — CN 22 and Sender's Declaration.*
Merchandise samples without commercial value, microfilm, microfiche, and magnetic tape.	PS Form 2976, *Customs — CN 22 and Sender's Declaration.*
Merchandise and all articles subject to customs duty.	PS Form 2976-A, *Customs Declaration and Dispatch Note CP 72,* inside a PS Form 2976-E, *Customs Declaration Envelope CP 91.*

Size Limits (221.52)

Maximum length: 36 inches
Maximum length and girth combined: 79 inches

Notes:

1. A commercial invoice must be included with all commercial shipments.
2. Coins; banknotes; currency notes, including paper money; securities of any kind payable to bearer; traveler's checks; platinum, gold, and silver; precious stones; jewelry; watches; and other valuable articles are prohibited in Express Mail International shipments to Egypt.

Reciprocal Service Name: International Express Mail Service (EMS)

Country Code: EG

Areas Served:

Al Mansoura	Ismailia
Al Asher Men Ramadan	Kafr El Dawar
Alexandria	Luxor
Assiout	Port Said
Aswan-Horgada	Port Tawfiq
Banha Beni Souif	Samanoud
Cairo	Shebin El Kom
Damanhour	Souhag
Damiette	Suez
El Mehalla El Kobra	Tanta
El Menya	Zagazig
El Santa Gharbya	Zifta
Hay El Arbain	

Priority Mail International (230) Price Group 8

Refer to Notice 123, *Price List*, for the applicable retail, commercial base, or commercial plus price.
Weight Limit: 66 lbs.

Note: *Ordinary Priority Mail International includes indemnity at no cost based on weight. (See 230.)*

Priority Mail International — Flat Rate

Flat Rate Envelopes or Small Flat Rate Priced Boxes: The maximum weight is 4 pounds. Refer to Notice 123, *Price List*, for the applicable retail, commercial base, or commercial plus price.

Flat Rate Boxes — Medium and Large: The maximum weight is 20 pounds, or the limit set by the individual country, whichever is less. Refer to Notice 123, *Price List*, for the retail, commercial base, or commercial plus price.

Insurance (232.92)

Available for **Priority Mail International merchandise parcels** only (see 323.72 for markings)

Insured Amount not over	Fee	Insured Amount not over	Fee
$50	$2.45		
100	3.60	Add $1.15 for each additional $100 or fraction of insurance coverage.	
200	4.75		
300	5.90		
400	7.05		
500	8.20	$1,685 max.	$22.00

Size Limits (231.22)

Maximum length: 42 inches
Maximum length and girth combined: 79 inches

First-Class Mail International (240) Price Group 8

For the prices and maximum weights for letters, large envelopes (flats), packages (small packets), and postcards, see Notice 123, *Price List*.

Size Limits

Letters: See 241.212
Postcards: See 241.221
Large Envelopes (Flats): See 241.232
Packages (Small Packets): See 241.242 and 241.243

Airmail M-bags (260) — Direct Sack to One Addressee Price Group 8

Refer to Notice 123, *Price List*, for the applicable retail, commercial base, or commercial plus price.
Weight Limit: 66 lbs.

Matter for the Blind (270)

Free when sent as First-Class Mail International, including Priority Mail International Flat Rate Envelopes and Small Flat Rate Priced Boxes. Weight limit: 4 pounds.
Free when sent as Priority Mail International. Weight limit: 15 pounds.

Extra Services

Certificate of Mailing (313)

Individual Pieces	Fee
Individual article (PS Form 3817)	$1.15
Firm mailing books (PS Form 3877), per article listed (minimum 3)	0.44
Duplicate copy of PS Form 3817 or PS Form 3877 (per page)	1.15
Bulk Quantities	**Fee**
First 1,000 pieces (or fraction thereof)	$6.70
Each additional 1,000 pieces (or fraction thereof)	0.80
Duplicate copy of PS Form 3606	1.15

COD and Certified **NOT** for International Mail

International Business Reply Service (382)

Fee: Envelopes up to 2 ounces $1.50; Cards $1.00

International Postal Money Order (371)

NOT Available

International Reply Coupons (381) **Fee:** $2.20

Registered Mail (330) **Fee:** $11.75

Maximum Indemnity: $47.33
Available for First-Class Mail International, including postcards and Flat Rate Envelopes and Small Flat Rate Priced Boxes, and matter for the blind or other physically handicapped persons. Not applicable to M-bags.

Restricted Delivery (350) **Fee:** $4.55

Available for registered mail with a return receipt.
Endorsements: A remettre en main propre.

Return Receipt (340) **Fee:** $2.35

Available for registered mail and insured Priority Mail International parcels only.

El Salvador

Country Conditions for Mailing

Prohibitions (130)

Coins; banknotes; currency notes; securities payable to bearer; traveler's checks; manufactured and unmanufactured platinum, gold, and silver; precious stones; jewelry; and other valuable articles.
Gambling equipment.
Perishable infectious biological substances.
Radioactive materials.
Unstamped cigarette paper.

Restrictions

Cigarettes must have the words "Importacion a El Salvador" printed or stamped on each package.

Observations

1. First-Class Mail International items may not contain dutiable articles.
2. Commercial invoices are required for all commercial shipments regardless of value and for gift parcels valued at $50 or more. No invoices are required for gift shipments valued at less than $50.
3. For all shipments valued at $50 or more, the sender should submit to a Salvadoran consulate copies of the commercial invoice in the form prescribed by the Salvadoran regulations. The consulate returns 2 legalized copies to the sender, who should mail them to the addressee direct, not enclosed in the parcel.
4. For commercial shipments valued at less than $50, 3 copies of the invoice (which need not be legalized) should be mailed directly to the addressee.
5. Certificates of origin are required only if exemption from or modification of customs duty is claimed under a trade agreement.
6. Salvadoran consuls are located in principal cities of the United States.

Customs Forms Required (123)

First-Class Mail International items and Priority Mail International Flat Rate Envelopes and Small Flat Rate Priced Boxes:
PS Form 2976 (see 123.61)
Priority Mail International parcels:
PS Form 2976-A inside 2976-E (envelope)

Global Express Guaranteed (210) Price Group 8

Refer to Notice 123, *Price List*, for the applicable retail, commercial base, or commercial plus price.
Weight Limit: 70 lbs.

Insurance (212.5)

Insured Amount not over	Fee	Insured Amount not over	Fee
$100	No Fee	For document reconstruction insurance or non-document insurance coverage above $800, add $1.00 per $100 or fraction thereof, up to a maximum of $2,499 per shipment.	
200	$1.00		
300	2.00		
400	3.00		
500	4.00		
600	5.00		
700	6.00		
800	7.00	$2,499 max.	$24.00

Value Limit (212.1)

The maximum value of a GXG shipment to this country is $2,499 or a lesser amount if limited by content or value.

Size Limits (211.22)

The surface area of the address side of the item to be mailed must be large enough to completely contain the Global Express Guaranteed Air Waybill/Shipping Invoice (shipping label), postage, endorsement, and any applicable markings. The shipping label is approximately 5.5 inches high and 9.5 inches long.
Maximum length: 46 inches
Maximum width: 35 inches
Maximum height: 46 inches
Maximum length and girth combined: 108 inches

General Conditions for Mailing

See Publication 141, *Global Express Guaranteed Service Guide,* for information about areas served in the destination country, allowable contents, packaging and labeling requirements, tracking and tracing, service standards, and other conditions for mailing.

Express Mail International (220) Price Group 9

Refer to Notice 123, *Price List*, for the applicable retail, commercial base, or commercial plus price.
Weight Limit: 66 lbs.

Express Mail International — Flat Rate Envelope and Flat Rate Boxes

The maximum weight for the Express Mail International Flat Rate Envelope and the Express Mail International Flat Rate Boxes is 20 pounds. Refer to Notice 123, *Price List*, for the applicable retail, commercial base, or commercial plus price.

Insurance (222.8)

Available for **Express Mail International merchandise shipments** only

Insured Amount not over	Fee	Insured Amount not over	Fee
$100	No Fee	For insurance coverage above $2,000, add $1.50 for each $500 or fraction thereof, up to a maximum of $5,000 per shipment.	
200	$0.85		
500	2.35		
1,000	3.85		
1,500	5.35		
2,000	6.85	$5,000 max.	$15.85

Articles Admitted	Required Customs Form/Endorsement
Correspondence and business papers.	PS Form 2976, *Customs — CN 22 and Sender's Declaration.* Endorse item clearly next to mailing label as BUSINESS PAPERS.
Merchandise samples without commercial value.	PS Form 2976, *Customs — CN 22 and Sender's Declaration.*
Merchandise and all articles subject to customs duty.	PS Form 2976-A, *Customs Declaration and Dispatch Note CP 72,* inside a PS Form 2976-E, *Customs Declaration Envelope CP 91.*

Size Limits (221.52)

Maximum length: 36 inches
Maximum length and girth combined: 79 inches

Note:
Coins; banknotes; currency notes, including paper money; securities of any kind payable to bearer; traveler's checks; platinum, gold, and silver; precious stones; jewelry; watches; and other valuable articles are prohibited in Express Mail International shipments to El Salvador.

Reciprocal Service Name: EMS

Country Code: SV

Areas Served:

Ahuachapan	San Vincente
Chalatenango	Santa Ana
Cojutepeque	Santa Rosa de Lina
La Union	Santa Tecla
Nueva San Salvador	Sensuntepeque
San Francisco Gotera	Sonsonate
San Miguel	Usulutan
San Salvador	Zacatecoluca

Priority Mail International (230) Price Group 9

Refer to Notice 123, *Price List*, for the applicable retail, commercial base, or commercial plus price.
Weight Limit: 44 lbs.

Note: *Ordinary Priority Mail International includes indemnity at no cost based on weight. (See 230.)*

Priority Mail International — Flat Rate
Flat Rate Envelopes or Small Flat Rate Priced Boxes: The maximum weight is 4 pounds. Refer to Notice 123, *Price List*, for the applicable retail, commercial base, or commercial plus price.

Flat Rate Boxes — Medium and Large: The maximum weight is 20 pounds, or the limit set by the individual country, whichever is less. Refer to Notice 123, *Price List*, for the retail, commercial base, or commercial plus price.

Insurance (232.92) NOT Available

Size Limits (231.22)
Maximum length: 42 inches
Maximum length and girth combined: 79 inches

First-Class Mail International (240) Price Group 9
For the prices and maximum weights for letters, large envelopes (flats), packages (small packets), and postcards, see Notice 123, *Price List*.

Size Limits
Letters: See 241.212
Postcards: See 241.221
Large Envelopes (Flats): See 241.232
Packages (Small Packets): See 241.242 and 241.243

Airmail M-bags (260) — Direct Sack to One Addressee Price Group 9

Refer to Notice 123, *Price List*, for the applicable retail, commercial base, or commercial plus price.
Weight Limit: 66 lbs.

Matter for the Blind (270)
Free when sent as First-Class Mail International, including Priority Mail International Flat Rate Envelopes and Small Flat Rate Priced Boxes. Weight limit: 4 pounds.
Free when sent as Priority Mail International. Weight limit: 15 pounds.

Extra Services

Certificate of Mailing (313)

Individual Pieces	Fee
Individual article (PS Form 3817)	$1.15
Firm mailing books (PS Form 3877), per article listed (minimum 3)	0.44
Duplicate copy of PS Form 3817 or PS Form 3877 (per page)	1.15
Bulk Quantities	**Fee**
First 1,000 pieces (or fraction thereof)	$6.70
Each additional 1,000 pieces (or fraction thereof)	0.80
Duplicate copy of PS Form 3606	1.15

COD and Certified **NOT** for International Mail

International Business Reply Service (382)
Fee: Envelopes up to 2 ounces $1.50; Cards $1.00

International Postal Money Order (371)
Use MO Form MP1
Maximum Amount Available: $500 **Fee:** $4.45
Money Order Inquiry: **Fee:** $5.50

International Reply Coupons (381) **Fee:** $2.20

Registered Mail (330) **Fee:** $11.75
Maximum Indemnity: $47.33
Available for First-Class Mail International, including postcards and Flat Rate Envelopes and Small Flat Rate Priced Boxes, and matter for the blind or other physically handicapped persons. Not applicable to M-bags.

Restricted Delivery (350) **Fee:** $4.55
Available for registered mail with a return receipt.
Endorsements: A entragar en propia mano.

Return Receipt (340) **Fee:** $2.35
Available for registered mail only.

Equatorial Guinea

Country Conditions for Mailing

Prohibitions (130)
No list furnished.

Restrictions
No list furnished.

Observations
None

Customs Forms Required (123)
First-Class Mail International items and Priority Mail International Flat Rate Envelopes and Small Flat Rate Priced Boxes:
PS Form 2976 (see 123.61)
Priority Mail International parcels:
PS Form 2976-A inside 2976-E (envelope)

Global Express Guaranteed (210)

Not Available

Express Mail International (220) Price Group 7

Refer to Notice 123, *Price List*, for the applicable retail, commercial base, or commercial plus price.
Weight Limit: 44 lbs.

Express Mail International — Flat Rate Envelope and Flat Rate Boxes

The maximum weight for the Express Mail International Flat Rate Envelope and the Express Mail International Flat Rate Boxes is 20 pounds. Refer to Notice 123, *Price List*, for the applicable retail, commercial base, or commercial plus price.

Insurance (222.8)
Note: Express Mail International merchandise insurance is not available to this country. Document reconstruction insurance coverage is provided, at no additional cost, to a maximum of $100 per shipment. See 222.72.

Articles Admitted	Required Customs Form/Endorsement
Correspondence and business papers.	PS Form 2976, *Customs — CN 22 and Sender's Declaration.* Endorse item clearly next to mailing label as BUSINESS PAPERS.
Merchandise samples without commercial value and not subject to customs duty.	PS Form 2976, *Customs — CN 22 and Sender's Declaration.*

Size Limits (221.52)
Maximum length: 36 inches
Maximum length and girth combined: 79 inches

Notes:
1. Merchandise and all articles subject to customs duty are prohibited in Express Mail International shipments.
2. Coins; banknotes; currency notes, including paper money; securities of any kind payable to bearer; traveler's checks; platinum, gold, and silver; precious stones; jewelry; watches; and other valuable articles are prohibited in Express Mail International shipments to Equatorial Guinea.

Reciprocal Service Name: EMS

Country Code: GQ

Areas Served: Malabo

Priority Mail International (230) Price Group 7

Refer to Notice 123, *Price List*, for the applicable retail, commercial base, or commercial plus price.
Weight Limit: 22 lbs.

Note: *Ordinary Priority Mail International includes indemnity at no cost based on weight. (See 230.)*

Priority Mail International — Flat Rate
Flat Rate Envelopes or Small Flat Rate Priced Boxes: The maximum weight is 4 pounds. Refer to Notice 123, *Price List*, for the applicable retail, commercial base, or commercial plus price.

Flat Rate Boxes — Medium and Large: The maximum weight is 20 pounds, or the limit set by the individual country, whichever is less. Refer to Notice 123, *Price List*, for the retail, commercial base, or commercial plus price.

Insurance (232.92) NOT Available

Size Limits (231.22)
Maximum length: 42 inches
Maximum length and girth combined: 79 inches

First-Class Mail International (240) Price Group 7
For the prices and maximum weights for letters, large envelopes (flats), packages (small packets), and postcards, see Notice 123, *Price List*.

Size Limits
Letters: See 241.212
Postcards: See 241.221
Large Envelopes (Flats): See 241.232
Packages (Small Packets): See 241.242 and 241.243

Airmail M-bags (260) — Direct Sack to One Addressee Price Group 7

Refer to Notice 123, *Price List*, for the applicable retail, commercial base, or commercial plus price.
Weight Limit: 66 lbs.

Matter for the Blind (270)
Free when sent as First-Class Mail International, including Priority Mail International Flat Rate Envelopes and Small Flat Rate Priced Boxes. Weight limit: 4 pounds.
Free when sent as Priority Mail International. Weight limit: 15 pounds.

Extra Services

Certificate of Mailing (313)

Individual Pieces	Fee
Individual article (PS Form 3817)	$1.15
Firm mailing books (PS Form 3877), per article listed (minimum 3)	0.44
Duplicate copy of PS Form 3817 or PS Form 3877 (per page)	1.15
Bulk Quantities	**Fee**
First 1,000 pieces (or fraction thereof)	$6.70
Each additional 1,000 pieces (or fraction thereof)	0.80
Duplicate copy of PS Form 3606	1.15

COD and Certified

NOT for International Mail

International Business Reply Service (382)

Fee: Envelopes up to 2 ounces $1.50; Cards $1.00

International Postal Money Order (371)

NOT Available

International Reply Coupons (381)

Fee: $2.20

Registered Mail (330)

Fee: $11.75

Maximum Indemnity: $47.33
Available for First-Class Mail International, including postcards and Flat Rate Envelopes and Small Flat Rate Priced Boxes, and matter for the blind or other physically handicapped persons. Not applicable to M-bags.

Restricted Delivery (350)

NOT Available

Return Receipt (340)

Fee: $2.35

Available for registered mail only.

Eritrea

Country Conditions for Mailing

Prohibitions (130)

Coins; banknotes; currency notes (paper money); securities payable to bearer; traveler's checks; manufactured and unmanufactured platinum, gold, silver; precious stones; jewelry; and other valuable articles.

Matches of white phosphorus.

Restrictions

Cassettes, video tapes, books, and magazines require authorization of the Ministry of Information and Education.

Gold (non-ornamental) having commercial value is admitted by a special authorization of the Bank of Eritrea.

Radio communication apparatus requires authorization from the Telecommunications Authority.

Merchandise valued more than 50 Birr require authorization of the National Bank.

Prepared foods and beverages, used clothes, medicines require authorization of the Ministry of Public Health.

Observations

1. First-Class Mail International items may not contain dutiable articles.
2. Postal authorities of Eritrea may collect domestic postage from addressees for inbound shipments.
3. In order to facilitate customs clearance and delivery, senders must enclose in their mailpieces a copy of an invoice covering the contents. Such invoices must be attested by an appropriate authority of the country of origin (chamber of commerce, board of trade, etc.).
4. Packing and Packaging — All shipments must be very strongly packed. Contents liable to be affected by dampness should be enclosed in two separate waterproof covers.

Customs Forms Required (123)

First-Class Mail International items and Priority Mail International Flat Rate Envelopes and Small Flat Rate Priced Boxes:
PS Form 2976 (see 123.61)

Priority Mail International parcels:
PS Form 2976-A inside 2976-E (envelope)

Global Express Guaranteed (210) Price Group 4

Refer to Notice 123, *Price List*, for the applicable retail, commercial base, or commercial plus price.
Weight Limit: 70 lbs.

Insurance (212.5)

Insured Amount not over	Fee	Insured Amount not over	Fee
$100	No Fee	For document reconstruction insurance or non-document insurance coverage above $800, add $1.00 per $100 or fraction thereof, up to a maximum of $2,499 per shipment.	
200	$1.00		
300	2.00		
400	3.00		
500	4.00		
600	5.00		
700	6.00		
800	7.00	$2,499 max.	$24.00

Value Limit (212.1)

The maximum value of a GXG shipment to this country is $2,499 or a lesser amount if limited by content or value.

Size Limits (211.22)

The surface area of the address side of the item to be mailed must be large enough to completely contain the Global Express Guaranteed Air Waybill/Shipping Invoice (shipping label), postage, endorsement, and any applicable markings. The shipping label is approximately 5.5 inches high and 9.5 inches long.

Maximum length: 46 inches
Maximum width: 35 inches
Maximum height: 46 inches
Maximum length and girth combined: 108 inches

General Conditions for Mailing

See Publication 141, *Global Express Guaranteed Service Guide,* for information about areas served in the destination country, allowable contents, packaging and labeling requirements, tracking and tracing, service standards, and other conditions for mailing.

Express Mail International (220) Price Group 7

Refer to Notice 123, *Price List*, for the applicable retail, commercial base, or commercial plus price.
Weight Limit: 66 lbs.

Express Mail International — Flat Rate Envelope and Flat Rate Boxes

The maximum weight for the Express Mail International Flat Rate Envelope and the Express Mail International Flat Rate Boxes is 20 pounds. Refer to Notice 123, *Price List*, for the applicable retail, commercial base, or commercial plus price.

Insurance (222.8)

Available for **Express Mail International merchandise shipments** only

Insured Amount not over	Fee	Insured Amount not over	Fee
$100	No Fee	For insurance coverage above $2,000, add $1.50 for each $500 or fraction thereof, up to a maximum of $5,000 per shipment.	
200	$0.85		
500	2.35		
1,000	3.85		
1,500	5.35		
2,000	6.85	$5,000 max.	$15.85

Articles Admitted	Required Customs Form/Endorsement
Correspondence and business papers.	PS Form 2976, *Customs — CN 22 and Sender's Declaration.* Endorse item clearly next to mailing label as BUSINESS PAPERS.
Merchandise samples without commercial value and not subject to customs duty.	PS Form 2976, *Customs — CN 22 and Sender's Declaration.*
Merchandise and all articles subject to customs duty.	PS Form 2976-A, *Customs Declaration and Dispatch Note CP 72,* inside a PS Form 2976-E, *Customs Declaration Envelope CP 91.*

Size Limits (221.52)

Maximum length: 36 inches
Maximum length and girth combined: 79 inches

Notes:

1. Coins; banknotes; currency notes, including paper money; securities of any kind payable to bearer; traveler's checks; platinum, gold, and silver; precious stones; jewelry; watches; and other valuable articles are prohibited in Express Mail International shipments to Eritrea.
2. All items prohibited in regular international mail are also prohibited in Express Mail International to Eritrea.

Reciprocal Service Name: EMS

Country Code: ER

Areas Served:

Asmara
Assab
Massawa

Priority Mail International (230) Price Group 7

Refer to Notice 123, *Price List*, for the applicable retail, commercial base, or commercial plus price.
Weight Limit: 44 lbs.

Note: *Ordinary Priority Mail International includes indemnity at no cost based on weight. (See 230.)*

Priority Mail International — Flat Rate

Flat Rate Envelopes or Small Flat Rate Priced Boxes: The maximum weight is 4 pounds. Refer to Notice 123, *Price List*, for the applicable retail, commercial base, or commercial plus price.

Flat Rate Boxes — Medium and Large: The maximum weight is 20 pounds, or the limit set by the individual country, whichever is less. Refer to Notice 123, *Price List*, for the retail, commercial base, or commercial plus price.

Insurance (232.92) NOT Available

Size Limits (231.22)

Maximum length: 42 inches
Maximum length and girth combined: 79 inches

First-Class Mail International (240) Price Group 7

For the prices and maximum weights for letters, large envelopes (flats), packages (small packets), and postcards, see Notice 123, *Price List*.

Size Limits

Letters: See 241.212
Postcards: See 241.221
Large Envelopes (Flats): See 241.232
Packages (Small Packets): See 241.242 and 241.243

Airmail M-bags (260) — Direct Sack to One Addressee Price Group 7

Refer to Notice 123, *Price List*, for the applicable retail, commercial base, or commercial plus price.
Weight Limit: 66 lbs.

Matter for the Blind (270) NOT Available

Extra Services

Certificate of Mailing (313)

Individual Pieces	Fee
Individual article (PS Form 3817)	$1.15
Firm mailing books (PS Form 3877), per article listed (minimum 3)	0.44
Duplicate copy of PS Form 3817 or PS Form 3877 (per page)	1.15
Bulk Quantities	**Fee**
First 1,000 pieces (or fraction thereof)	$6.70
Each additional 1,000 pieces (or fraction thereof)	0.80
Duplicate copy of PS Form 3606	1.15

COD and Certified **NOT** for International Mail

International Business Reply Service (382)

Fee: Envelopes up to 2 ounces $1.50; Cards $1.00

International Postal Money Order (371)

NOT Available

International Reply Coupons (381) **Fee:** $2.20

Registered Mail (330) **Fee:** $11.75

Maximum Indemnity: $47.33
Available for First-Class Mail International, including postcards and Flat Rate Envelopes and Small Flat Rate Priced Boxes, and matter for the blind or other physically handicapped persons. Not applicable to M-bags.

Restricted Delivery (350) **Fee:** $4.55

Available for registered mail with a return receipt.
Endorsements: A remettre en main propre.

Return Receipt (340) **Fee:** $2.35

Available for registered mail only.

Estonia

Country Conditions for Mailing

Prohibitions (130)

Arms, munitions, and parts and accessories thereof.
Coins, bank notes, currency notes; traveler's checks; securities payable to bearer; platinum, gold, or silver (manufactured or not); precious stones, jewelry, and other valuable articles.
Explosive and pyrotechnics articles; combustible materials.
Perishable infectious biological substances.
Perishable noninfectious biological substances.
Radioactive materials.

Restrictions

Articles subject to customs duty may not be sent in ordinary or registered First-Class Mail International items, including the Priority Mail International Flat Rate Envelope and Small Flat Rate Priced Boxes.
Flour and preparations of cereals are permitted to private persons subject to inspection by quarantine officials.
Medicines, narcotic and psychotropic substances; other products used in medical treatment are subject to prior authorization by the Estonian Ministry of Social Maintenance Health Department or by the Estonian State Department of Veterinary.
Wireless transmission equipment is subject to addressee's compliance with import restrictions, permits, or quota conditions.

Observations

None

Customs Forms Required (123)

First-Class Mail International items and Priority Mail International Flat Rate Envelopes and Small Flat Rate Priced Boxes:
PS Form 2976 (see 123.61)
Priority Mail International parcels:
PS Form 2976-A inside 2976-E (envelope)

Global Express Guaranteed (210) Price Group 4

Refer to Notice 123, *Price List*, for the applicable retail, commercial base, or commercial plus price.
Weight Limit: 70 lbs.

Insurance (212.5)

Insured Amount not over	Fee	Insured Amount not over	Fee
$100	No Fee	For document reconstruction insurance or non-document insurance coverage above $800, add $1.00 per $100 or fraction thereof, up to a maximum of $2,499 per shipment.	
200	$1.00		
300	2.00		
400	3.00		
500	4.00		
600	5.00		
700	6.00		
800	7.00	$2,499 max.	$24.00

Value Limit (212.1)

The maximum value of a GXG shipment to this country is $2,499 or a lesser amount if limited by content or value.

Size Limits (211.22)

The surface area of the address side of the item to be mailed must be large enough to completely contain the Global Express Guaranteed Air Waybill/Shipping Invoice (shipping label), postage, endorsement, and any applicable markings. The shipping label is approximately 5.5 inches high and 9.5 inches long.
Maximum length: 46 inches
Maximum width: 35 inches
Maximum height: 46 inches
Maximum length and girth combined: 108 inches

General Conditions for Mailing

See Publication 141, *Global Express Guaranteed Service Guide,* for information about areas served in the destination country, allowable contents, packaging and labeling requirements, tracking and tracing, service standards, and other conditions for mailing.

Express Mail International (220) Price Group 4

Refer to Notice 123, *Price List*, for the applicable retail, commercial base, or commercial plus price.
Weight Limit: 66 lbs.

Express Mail International — Flat Rate Envelope and Flat Rate Boxes

The maximum weight for the Express Mail International Flat Rate Envelope and the Express Mail International Flat Rate Boxes is 20 pounds. Refer to Notice 123, *Price List*, for the applicable retail, commercial base, or commercial plus price.

Insurance (222.8)

Available for **Express Mail International merchandise shipments** only

Insured Amount not over	Fee	Insured Amount not over	Fee
$100	No Fee	For insurance coverage above $2,000, add $1.50 for each $500 or fraction thereof, up to a maximum of $5,000 per shipment.	
200	$0.85		
500	2.35		
1,000	3.85		
1,500	5.35		
2,000	6.85	$5,000 max.	$15.85

Articles Admitted	Required Customs Form/Endorsement
Correspondence and business papers.	PS Form 2976, *Customs — CN 22 and Sender's Declaration.* Endorse item clearly next to mailing label as BUSINESS PAPERS.
Merchandise samples without commercial value and not subject to customs duty.	PS Form 2976, *Customs — CN 22 and Sender's Declaration.*
Merchandise and all articles subject to customs duty.	PS Form 2976-A, *Customs Declaration and Dispatch Note CP 72,* inside a PS Form 2976-E, *Customs Declaration Envelope CP 91.* A commercial invoice must be included in each item.

Size Limits (221.52)

Maximum length: 36 inches
Maximum length and girth combined: 79 inches

Note:
Coins; banknotes; currency notes, including paper money; securities of any kind payable to bearer; traveler's checks; platinum, gold, and silver; precious stones; jewelry; watches; and other valuable articles are prohibited in Express Mail International shipments to Estonia.

Reciprocal Service Name: EMS

Country Code: EE

Areas Served:
Express Mail International is available **only** to the following locations:

Area I: Postal Codes 200001–200902 - Tallinn
Area II:

Hiiumaa	Narva	Tartu
Jarvamaa	Parnu	Valgamaa
Jogevamaa	Polvamaa	Viljandimaa
Kohtla-Jarve	Raplamma	Vorumaa
Laanemaa	Saaremaa	
Laane-Virumaa	Sillamae	

Priority Mail International (230) Price Group 4

Refer to Notice 123, *Price List*, for the applicable retail, commercial base, or commercial plus price.
Weight Limit: 70 lbs.

Note: *Ordinary Priority Mail International includes indemnity at no cost based on weight. (See 230.)*

Priority Mail International — Flat Rate
Flat Rate Envelopes or Small Flat Rate Priced Boxes: The maximum weight is 4 pounds. Refer to Notice 123, *Price List*, for the applicable retail, commercial base, or commercial plus price.

Flat Rate Boxes — Medium and Large: The maximum weight is 20 pounds, or the limit set by the individual country, whichever is less. Refer to Notice 123, *Price List*, for the retail, commercial base, or commercial plus price.

Insurance (232.92)
Available for **Priority Mail International merchandise parcels** only (see 323.72 for markings)

Insured Amount not over	Fee	Insured Amount not over	Fee
$50	$2.45		
100	3.60	Add $1.15 for each additional $100 or fraction of insurance coverage.	
200	4.75		
300	5.90		
400	7.05		
500	8.20	$2,187 max.	$27.75

Size Limits (231.22)
Maximum length: 42 inches
Maximum length and girth combined: 79 inches

First-Class Mail International (240) Price Group 4
For the prices and maximum weights for letters, large envelopes (flats), packages (small packets), and postcards, see Notice 123, *Price List*.

Size Limits
Letters: See 241.212
Postcards: See 241.221
Large Envelopes (Flats): See 241.232
Packages (Small Packets): See 241.242 and 241.243

Airmail M-bags (260) — Direct Sack to One Addressee Price Group 4

Refer to Notice 123, *Price List*, for the applicable retail, commercial base, or commercial plus price.
Weight Limit: 66 lbs.

Matter for the Blind (270)
Free when sent as First-Class Mail International, including Priority Mail International Flat Rate Envelopes and Small Flat Rate Priced Boxes. Weight limit: 4 pounds.
Free when sent as Priority Mail International. Weight limit: 15 pounds.

Extra Services

Certificate of Mailing (313)

Individual Pieces	Fee
Individual article (PS Form 3817)	$1.15
Firm mailing books (PS Form 3877), per article listed (minimum 3)	0.44
Duplicate copy of PS Form 3817 or PS Form 3877 (per page)	1.15
Bulk Quantities	**Fee**
First 1,000 pieces (or fraction thereof)	$6.70
Each additional 1,000 pieces (or fraction thereof)	0.80
Duplicate copy of PS Form 3606	1.15

COD and Certified **NOT** for International Mail

International Business Reply Service (382)
Fee: Envelopes up to 2 ounces $1.50; Cards $1.00

International Postal Money Order (371)
NOT Available

International Reply Coupons (381) **Fee:** $2.20

Registered Mail (330) **Fee:** $11.75
Maximum Indemnity: $47.33
Available for First-Class Mail International, including postcards and Flat Rate Envelopes and Small Flat Rate Priced Boxes, and matter for the blind or other physically handicapped persons. Not applicable to M-bags.

Restricted Delivery (350) **Fee:** $4.55
Available for registered mail with a return receipt.
Endorsements: A remettre en main propre.

Return Receipt (340) **Fee:** $2.35
Available for registered mail and insured Priority Mail International parcels only.

Ethiopia

Country Conditions for Mailing

Prohibitions (130)

Coins; banknotes; currency notes (paper money); securities payable to bearer; traveler's checks; manufactured and unmanufactured platinum, gold, silver; precious stones; jewelry; and other valuable articles.

Restrictions

Cassettes, video tapes, books, and magazines require authorization of the Ministry of Information and Education.

Merchandise valued more than 50 Birr require authorization of the National Bank.

Prepared foods and beverages, used clothes, medicines require authorization of the Ministry of Public Health.

Observations

1. First-Class Mail International items, including Priority Mail International Flat Rate Envelopes, may not contain dutiable articles.
2. Postal authorities of Ethiopia may collect domestic postage from addressees for inbound shipments.
3. In order to facilitate customs clearance and delivery, senders must enclose in their mailpieces a copy of an invoice covering the contents. Such invoices must be attested by an appropriate authority of the country of origin (chamber of commerce, board of trade, etc.).
4. Packing and Packaging — All shipments must be very strongly packed. Contents liable to be affected by dampness should be enclosed in two separate waterproof covers.

Customs Forms Required (123)

First-Class Mail International items and Priority Mail International Flat Rate Envelopes and Small Flat Rate Priced Boxes:
PS Form 2976 (see 123.61)

Priority Mail International parcels:
PS Form 2976-A inside 2976-E (envelope)

Global Express Guaranteed (210) Price Group 4

Refer to Notice 123, *Price List*, for the applicable retail, commercial base, or commercial plus price.
Weight Limit: 70 lbs.

Insurance (212.5)

Insured Amount not over	Fee	Insured Amount not over	Fee
$100	No Fee	For document reconstruction insurance or non-document insurance coverage above $800, add $1.00 per $100 or fraction thereof, up to a maximum of $2,499 per shipment.	
200	$1.00		
300	2.00		
400	3.00		
500	4.00		
600	5.00		
700	6.00		
800	7.00	$2,499 max.	$24.00

Value Limit (212.1)

The maximum value of a GXG shipment to this country is $2,499 or a lesser amount if limited by content or value.

Size Limits (211.22)

The surface area of the address side of the item to be mailed must be large enough to completely contain the Global Express Guaranteed Air Waybill/Shipping Invoice (shipping label), postage, endorsement, and any applicable markings. The shipping label is approximately 5.5 inches high and 9.5 inches long.

Maximum length: 46 inches
Maximum width: 35 inches
Maximum height: 46 inches
Maximum length and girth combined: 108 inches

General Conditions for Mailing

See Publication 141, *Global Express Guaranteed Service Guide,* for information about areas served in the destination country, allowable contents, packaging and labeling requirements, tracking and tracing, service standards, and other conditions for mailing.

Express Mail International (220) Price Group 8

Refer to Notice 123, *Price List*, for the applicable retail, commercial base, or commercial plus price.
Weight Limit: 66 lbs.

Express Mail International — Flat Rate Envelope and Flat Rate Boxes

The maximum weight for the Express Mail International Flat Rate Envelope and the Express Mail International Flat Rate Boxes is 20 pounds. Refer to Notice 123, *Price List*, for the applicable retail, commercial base, or commercial plus price.

Insurance (222.8)

Available for **Express Mail International merchandise shipments** only

Insured Amount not over	Fee	Insured Amount not over	Fee
$100	No Fee	For insurance coverage above $2,000, add $1.50 for each $500 or fraction thereof, up to a maximum of $5,000 per shipment.	
200	$0.85		
500	2.35		
1,000	3.85		
1,500	5.35		
2,000	6.85	$5,000 max.	$15.85

Articles Admitted	Required Customs Form/Endorsement
Correspondence and business papers.	PS Form 2976, *Customs — CN 22 and Sender's Declaration.* Endorse item clearly next to mailing label as BUSINESS PAPERS.
Merchandise samples without commercial value.	PS Form 2976, *Customs — CN 22 and Sender's Declaration.*
Merchandise and all articles subject to customs duty.	PS Form 2976-A, *Customs Declaration and Dispatch Note CP 72,* inside a PS Form 2976-E, *Customs Declaration Envelope CP 91.* A commercial invoice must be included in each item.

Size Limits (221.52)

Maximum length: 36 inches
Maximum length and girth combined: 79 inches

Note:

Coins; banknotes; currency notes, including paper money; securities of any kind payable to bearer; traveler's checks; platinum, gold, and silver; precious stones; jewelry; watches; and other valuable articles are prohibited in Express Mail International shipments to Ethiopia.

Reciprocal Service Name: EMS Ethiopia

Country Code: ET

Areas Served:

Addis Ababa	Jimma
Bahr Dar	Harar
Dir Dawa	

Priority Mail International (230) Price Group 8

Refer to Notice 123, *Price List*, for the applicable retail, commercial base, or commercial plus price.
Weight Limit: 66 lbs.

Note: *Ordinary Priority Mail International includes indemnity at no cost based on weight. (See 230.)*

Priority Mail International — Flat Rate

Flat Rate Envelopes or Small Flat Rate Priced Boxes: The maximum weight is 4 pounds. Refer to Notice 123, *Price List*, for the applicable retail, commercial base, or commercial plus price.

Flat Rate Boxes — Medium and Large: The maximum weight is 20 pounds, or the limit set by the individual country, whichever is less. Refer to Notice 123, *Price List*, for the retail, commercial base, or commercial plus price.

Insurance (232.92) NOT Available

Size Limits (231.22)

Maximum length: 42 inches
Maximum length and girth combined: 79 inches

First-Class Mail International (240) Price Group 8

For the prices and maximum weights for letters, large envelopes (flats), packages (small packets), and postcards, see Notice 123, *Price List*.

Size Limits

Letters: See 241.212
Postcards: See 241.221
Large Envelopes (Flats): See 241.232
Packages (Small Packets): See 241.242 and 241.243

Airmail M-bags (260) — Direct Sack to One Addressee Price Group 8

Refer to Notice 123, *Price List*, for the applicable retail, commercial base, or commercial plus price.
Weight Limit: 66 lbs.

Matter for the Blind (270) NOT Available

Extra Services

Certificate of Mailing (313)

Individual Pieces	Fee
Individual article (PS Form 3817)	$1.15
Firm mailing books (PS Form 3877), per article listed (minimum 3)	0.44
Duplicate copy of PS Form 3817 or PS Form 3877 (per page)	1.15
Bulk Quantities	**Fee**
First 1,000 pieces (or fraction thereof)	$6.70
Each additional 1,000 pieces (or fraction thereof)	0.80
Duplicate copy of PS Form 3606	1.15

COD and Certified **NOT** for International Mail

International Business Reply Service (382)

Fee: Envelopes up to 2 ounces $1.50; Cards $1.00

International Postal Money Order (371)

NOT Available

International Reply Coupons (381) **Fee:** $2.20

Registered Mail (330) **Fee:** $11.75

Maximum Indemnity: $47.33
Available for First-Class Mail International, including postcards and Flat Rate Envelopes and Small Flat Rate Priced Boxes, and matter for the blind or other physically handicapped persons. Not applicable to M-bags.

Restricted Delivery (350) **Fee:** $4.55

Available for registered mail with a return receipt.
Endorsements: A remettre en main propre.

Return Receipt (340) **Fee:** $2.35

Available for registered mail only.

Falkland Islands

Country Conditions for Mailing

Prohibitions (130)
Radioactive materials.
Coins; banknotes; currency notes; securities payable to bearer; traveler's checks; platinum, gold or silver, manufactured or not; precious stones; jewelry; and other valuable articles.
Otherwise, same as for Great Britain.

Restrictions
Same as for Great Britain, except for prohibitions listed above and Priority Mail International service that is suspended because transportation is unavailable.

Observations
None

Customs Forms Required (123)
First-Class Mail International items and Priority Mail International Flat Rate Envelopes and Small Flat Rate Priced Boxes:
PS Form 2976 (see 123.61)

Global Express Guaranteed (210)
Not Available

Express Mail International (220)
Not Available

Priority Mail International (230) **Price Group 9**
Available only for Priority Mail International Flat Rate Envelope and Small Flat Rate Priced Boxes.

Flat Rate Envelopes or Small Flat Rate Priced Boxes: The maximum weight is 4 pounds. Refer to Notice 123, *Price List*, for the applicable retail, commercial base, or commercial plus price.

Insurance (232.92) NOT Available

First-Class Mail International (240) **Price Group 9**
For the prices and maximum weights for letters, large envelopes (flats), packages (small packets), and postcards, see Notice 123, *Price List*.

Size Limits
Letters: See 241.212
Postcards: See 241.221
Large Envelopes (Flats): See 241.232
Packages (Small Packets): See 241.242 and 241.243

Airmail M-bags (260) — Direct Sack to One Addressee **Price Group 9**

Refer to Notice 123, *Price List*, for the applicable retail, commercial base, or commercial plus price.
Weight Limit: 66 lbs.

Matter for the Blind (270)
Free when sent as First-Class Mail International, including Priority Mail International Flat Rate Envelopes and Small Flat Rate Priced Boxes. Weight limit: 4 pounds.
Free when sent as Priority Mail International. Weight limit: 15 pounds.

Extra Services

Certificate of Mailing (313)

Individual Pieces	Fee
Individual article (PS Form 3817)	$1.15
Firm mailing books (PS Form 3877), per article listed (minimum 3)	0.44
Duplicate copy of PS Form 3817 or PS Form 3877 (per page)	1.15
Bulk Quantities	**Fee**
First 1,000 pieces (or fraction thereof)	$6.70
Each additional 1,000 pieces (or fraction thereof)	0.80
Duplicate copy of PS Form 3606	1.15

COD and Certified **NOT** for International Mail

International Business Reply Service (382)
Fee: Envelopes up to 2 ounces $1.50; Cards $1.00

International Postal Money Order (371)
NOT Available

International Reply Coupons (381) **Fee:** $2.20

Registered Mail (330) **Fee:** $11.75
Maximum Indemnity: $47.33
Available for First-Class Mail International, including postcards and Flat Rate Envelopes and Small Flat Rate Priced Boxes, and matter for the blind or other physically handicapped persons. Not applicable to M-bags.

Restricted Delivery (350) NOT Available

Return Receipt (340) **Fee:** $2.35
Available for registered mail only.

Faroe Islands

Country Conditions for Mailing

Prohibitions (130)
Radioactive materials.
Same as for Denmark.

Restrictions
Coins; banknotes; currency notes (paper money); securities payable to bearer; traveler's checks; manufactured and unmanufactured platinum, gold, silver; precious stones; jewelry; and other valuable articles, may only be sent in registered First-Class Mail International shipments or insured parcels.
Same as for Denmark.

Observations
Same as for Denmark.

Customs Forms Required (123)
First-Class Mail International items and Priority Mail International Flat Rate Envelopes and Small Flat Rate Priced Boxes:
PS Form 2976 (see 123.61)
Priority Mail International parcels:
PS Form 2976-A inside 2976-E (envelope)

Global Express Guaranteed (210) Price Group 5

Refer to Notice 123, *Price List*, for the applicable retail, commercial base, or commercial plus price.
Weight Limit: 70 lbs.

Insurance (212.5)

Insured Amount not over	Fee	Insured Amount not over	Fee
$100	No Fee	For document reconstruction insurance or non-document insurance coverage above $800, add $1.00 per $100 or fraction thereof, up to a maximum of $2,499 per shipment.	
200	$1.00		
300	2.00		
400	3.00		
500	4.00		
600	5.00		
700	6.00		
800	7.00	$2,499 max.	$24.00

Value Limit (212.1)
The maximum value of a GXG shipment to this country is $2,499 or a lesser amount if limited by content or value.

Size Limits (211.22)
The surface area of the address side of the item to be mailed must be large enough to completely contain the Global Express Guaranteed Air Waybill/Shipping Invoice (shipping label), postage, endorsement, and any applicable markings. The shipping label is approximately 5.5 inches high and 9.5 inches long.
Maximum length: 46 inches
Maximum width: 35 inches
Maximum height: 46 inches
Maximum length and girth combined: 108 inches

General Conditions for Mailing
See Publication 141, *Global Express Guaranteed Service Guide,* for information about areas served in the destination country, allowable contents, packaging and labeling requirements, tracking and tracing, service standards, and other conditions for mailing.

Express Mail International (220) Price Group 5

Refer to Notice 123, *Price List*, for the applicable retail, commercial base, or commercial plus price.
Weight Limit: 44 lbs.

Express Mail International — Flat Rate Envelope and Flat Rate Boxes
The maximum weight for the Express Mail International Flat Rate Envelope and the Express Mail International Flat Rate Boxes is 20 pounds. Refer to Notice 123, *Price List*, for the applicable retail, commercial base, or commercial plus price.

Insurance (222.8)
Available for **Express Mail International merchandise shipments** only

Insured Amount not over	Fee	Insured Amount not over	Fee
$100	No Fee	For insurance coverage above $2,000, add $1.50 for each $500 or fraction thereof, up to a maximum of $5,000 per shipment.	
200	$0.85		
500	2.35		
1,000	3.85		
1,500	5.35		
2,000	6.85	$5,000 max.	$15.85

Articles Admitted	Required Customs Form/Endorsement
Business papers.	No form required. Endorse item clearly next to mailing label as BUSINESS PAPERS.
Merchandise samples without commercial value, and articles valued under U.S. $100.	PS Form 2976, *Customs — CN 22 and Sender's Declaration.*
Merchandise and articles valued over U.S. $100.	PS Form 2976-A, *Customs Declaration and Dispatch Note CP 72,* inside a PS Form 2976-E, *Customs Declaration Envelope CP 91.*

Size Limits (221.52)
Maximum length: 36 inches
Maximum length and girth combined: 79 inches

Notes:
1. A commercial invoice should be included with all commercial shipments.
2. Coins; banknotes; currency notes, including paper money; securities of any kind payable to bearer; traveler's checks; platinum, gold, and silver; precious stones; jewelry; watches; and other valuable articles are prohibited in Express Mail International shipments to the Faroe Islands.

Reciprocal Service Name: EMS-Jetpost

Country Code: FO

Areas Served:
The Faroe Islands are served through Denmark.

Priority Mail International (230) Price Group 5

Refer to Notice 123, *Price List*, for the applicable retail, commercial base, or commercial plus price.
Weight Limit: 70 lbs.

Note: *Ordinary Priority Mail International includes indemnity at no cost based on weight. (See 230.)*

Priority Mail International — Flat Rate

Flat Rate Envelopes or Small Flat Rate Priced Boxes: The maximum weight is 4 pounds. Refer to Notice 123, *Price List*, for the applicable retail, commercial base, or commercial plus price.

Flat Rate Boxes — Medium and Large: The maximum weight is 20 pounds, or the limit set by the individual country, whichever is less. Refer to Notice 123, *Price List*, for the retail, commercial base, or commercial plus price.

Insurance (232.92)

Available for **Priority Mail International merchandise parcels** only (see 323.72 for markings)

Insured Amount not over	Fee	Insured Amount not over	Fee
$50	$2.45	Add $1.15 for each additional $100 or fraction of insurance coverage.	
100	3.60		
200	4.75		
300	5.90		
400	7.05		
500	8.20	$5,000 max.	$59.95

Size Limits (231.22)

Maximum length: 42 inches
Maximum length and girth combined: 79 inches

First-Class Mail International (240) Price Group 5

For the prices and maximum weights for letters, large envelopes (flats), packages (small packets), and postcards, see Notice 123, *Price List*.

Size Limits

Letters: See 241.212
Postcards: See 241.221
Large Envelopes (Flats): See 241.232
Packages (Small Packets): See 241.242 and 241.243

Airmail M-bags (260) — Direct Sack to One Addressee Price Group 5

Refer to Notice 123, *Price List*, for the applicable retail, commercial base, or commercial plus price.
Weight Limit: 66 lbs.

Matter for the Blind (270)

Free when sent as First-Class Mail International, including Priority Mail International Flat Rate Envelopes and Small Flat Rate Priced Boxes. Weight limit: 4 pounds.
Free when sent as Priority Mail International. Weight limit: 15 pounds.

Extra Services

Certificate of Mailing (313)

Individual Pieces	Fee
Individual article (PS Form 3817)	$1.15
Firm mailing books (PS Form 3877), per article listed (minimum 3)	0.44
Duplicate copy of PS Form 3817 or PS Form 3877 (per page)	1.15
Bulk Quantities	**Fee**
First 1,000 pieces (or fraction thereof)	$6.70
Each additional 1,000 pieces (or fraction thereof)	0.80
Duplicate copy of PS Form 3606	1.15

COD and Certified **NOT** for International Mail

International Business Reply Service (382)

Fee: Envelopes up to 2 ounces $1.50; Cards $1.00

International Postal Money Order (371)

NOT Available

International Reply Coupons (381) **Fee:** $2.20

Registered Mail (330) **Fee:** $11.75

Maximum Indemnity: $47.33
Available for First-Class Mail International, including postcards and Flat Rate Envelopes and Small Flat Rate Priced Boxes, and matter for the blind or other physically handicapped persons. Not applicable to M-bags.

Restricted Delivery (350) **Fee:** $4.55

Available for registered mail with a return receipt.
Endorsements: A remettre en main propre.
Per t'u dorezuar ne doren e vet.

Return Receipt (340) **Fee:** $2.35

Available for registered mail and insured Priority Mail International parcels only.

Fiji

Country Conditions for Mailing

Prohibitions (130)

Arms and ammunition, flick knives.
Coins; bank notes; currency notes (paper money); securities of any kind payable to bearer; and traveler's checks are prohibited in registered and unregistered First-Class Mail International packages, small packets, insured and uninsured parcels, as well as Express Mail International shipments, that are mailed to Fiji.
Dyes and coloring materials.
Perishable infectious biological substances.
Perishable noninfectious biological substances.
Radioactive materials.

Restrictions

Tobacco, cigars, cigarettes, and snuff may not exceed 11 pounds or be packed with other merchandise.

Observations

Each commercial shipment must be accompanied by a certified invoice (original or copy), written in English or French and attached to the outside of the article. The invoice must not be enclosed in the article.

Customs Forms Required (123)

First-Class Mail International items and Priority Mail International Flat Rate Envelopes and Small Flat Rate Priced Boxes:
PS Form 2976 (see 123.61)
Priority Mail International parcels:
PS Form 2976-A inside 2976-E (envelope)

Global Express Guaranteed (210) Price Group 8

Refer to Notice 123, *Price List*, for the applicable retail, commercial base, or commercial plus price.

Weight Limit: 70 lbs.

Insurance (212.5)

Insured Amount not over	Fee	Insured Amount not over	Fee
$100	No Fee	For document reconstruction insurance or non-document insurance coverage above $800, add $1.00 per $100 or fraction thereof, up to a maximum of $2,499 per shipment.	
200	$1.00		
300	2.00		
400	3.00		
500	4.00		
600	5.00		
700	6.00		
800	7.00	$2,499 max.	$24.00

Value Limit (212.1)

The maximum value of a GXG shipment to this country is $2,499 or a lesser amount if limited by content or value.

Size Limits (211.22)

The surface area of the address side of the item to be mailed must be large enough to completely contain the Global Express Guaranteed Air Waybill/Shipping Invoice (shipping label), postage, endorsement, and any applicable markings. The shipping label is approximately 5.5 inches high and 9.5 inches long.
Maximum length: 46 inches
Maximum width: 35 inches
Maximum height: 46 inches
Maximum length and girth combined: 108 inches

General Conditions for Mailing

See Publication 141, *Global Express Guaranteed Service Guide,* for information about areas served in the destination country, allowable contents, packaging and labeling requirements, tracking and tracing, service standards, and other conditions for mailing.

Express Mail International (220) Price Group 6

Refer to Notice 123, *Price List*, for the applicable retail, commercial base, or commercial plus price.

Weight Limit: 66 lbs.

Express Mail International — Flat Rate Envelope and Flat Rate Boxes

The maximum weight for the Express Mail International Flat Rate Envelope and the Express Mail International Flat Rate Boxes is 20 pounds. Refer to Notice 123, *Price List*, for the applicable retail, commercial base, or commercial plus price.

Insurance (222.8)

Available for **Express Mail International merchandise shipments** only

Insured Amount not over	Fee	Insured Amount not over	Fee
$100	No Fee	For insurance coverage above $2,000, add $1.50 for each $500 or fraction thereof, up to a maximum of $5,000 per shipment.	
200	$0.85		
500	2.35		
1,000	3.85		
1,500	5.35		
2,000	6.85	$5,000 max.	$15.85

Articles Admitted	Required Customs Form/Endorsement
Correspondence, business papers, and computer data.	PS Form 2976, *Customs — CN 22 and Sender's Declaration.* Endorse item clearly next to mailing label as BUSINESS PAPERS.
Merchandise samples without commercial value and not subject to customs duty.	PS Form 2976, *Customs — CN 22 and Sender's Declaration.*
Merchandise and all articles subject to customs duty.	PS Form 2976-A, *Customs Declaration and Dispatch Note CP 72,* inside a PS Form 2976-E, *Customs Declaration Envelope CP 91.* A commercial invoice must be included with each item.

Size Limits (221.52)

Maximum length: 36 inches
Maximum length and girth combined: 79 inches

Note:

Coins; banknotes; currency notes, including paper money; securities of any kind payable to bearer; traveler's checks; platinum, gold, and silver; precious stones; jewelry; watches; and other valuable articles are prohibited in Express Mail International shipments to Fiji.

Reciprocal Service Name: EMS

Country Code: FJ

Areas Served:

Ba
Labasa
Lautoka
Nadi
Nadi Airport
Suva

Priority Mail International (230) Price Group 6

Refer to Notice 123, *Price List*, for the applicable retail, commercial base, or commercial plus price.
Weight Limit: 44 lbs.

Note: *Ordinary Priority Mail International includes indemnity at no cost based on weight. (See 230.)*

Priority Mail International — Flat Rate

Flat Rate Envelopes or Small Flat Rate Priced Boxes: The maximum weight is 4 pounds. Refer to Notice 123, *Price List*, for the applicable retail, commercial base, or commercial plus price.

Flat Rate Boxes — Medium and Large: The maximum weight is 20 pounds, or the limit set by the individual country, whichever is less. Refer to Notice 123, *Price List*, for the retail, commercial base, or commercial plus price.

Insurance (232.92) NOT Available

Size Limits (231.22)

Maximum length: 42 inches
Maximum length and girth combined: 79 inches

First-Class Mail International (240) Price Group 6

For the prices and maximum weights for letters, large envelopes (flats), packages (small packets), and postcards, see Notice 123, *Price List*.

Size Limits

Letters: See 241.212
Postcards: See 241.221
Large Envelopes (Flats): See 241.232
Packages (Small Packets): See 241.242 and 241.243

Airmail M-bags (260) — Direct Sack to One Addressee Price Group 6

Refer to Notice 123, *Price List*, for the applicable retail, commercial base, or commercial plus price.
Weight Limit: 66 lbs.

Matter for the Blind (270)

Free when sent as First-Class Mail International, including Priority Mail International Flat Rate Envelopes and Small Flat Rate Priced Boxes. Weight limit: 4 pounds.
Free when sent as Priority Mail International. Weight limit: 15 pounds.

Extra Services

Certificate of Mailing (313)

Individual Pieces	Fee
Individual article (PS Form 3817)	$1.15
Firm mailing books (PS Form 3877), per article listed (minimum 3)	0.44
Duplicate copy of PS Form 3817 or PS Form 3877 (per page)	1.15
Bulk Quantities	**Fee**
First 1,000 pieces (or fraction thereof)	$6.70
Each additional 1,000 pieces (or fraction thereof)	0.80
Duplicate copy of PS Form 3606	1.15

COD and Certified **NOT** for International Mail

International Business Reply Service (382)

Fee: Envelopes up to 2 ounces $1.50; Cards $1.00

International Postal Money Order (371)

NOT Available

International Reply Coupons (381) **Fee:** $2.20

Registered Mail (330) **Fee:** $11.75

Maximum Indemnity: $47.33
Available for First-Class Mail International, including postcards and Flat Rate Envelopes and Small Flat Rate Priced Boxes, and matter for the blind or other physically handicapped persons. Not applicable to M-bags.

Restricted Delivery (350) **Fee:** $4.55

Available for registered mail with a return receipt.
Endorsements: A remettre en main propre.
Deliver to addressee in person.

Return Receipt (340) **Fee:** $2.35

Available for registered mail only.

Finland

Country Conditions for Mailing

Prohibitions (130)
Arms and weapons.
Human remains.
Live plants and animals.
Radioactive materials.

Restrictions
Medicines and drugs, including any substances that may be classed as pharmaceuticals by the Finnish authorities may only be addressed to authorized manufacturers, dealers, scientists, or public health officials for use or distribution in accordance with Finnish regulations. Such substances prepared in doses for use by patients must be clearly and correctly labeled showing the nature and quantity of the ingredients.

The authorization of the Finnish Ministry of Agriculture is required for the importation of meat and meat products.

Observations
1. A parcel may be addressed to a street address or to a post office box. A local telephone number for the addressee should be provided when the item is addressed to a street address and must be provided when the item is addressed to a post office box.
2. For parcels, an invoice, in duplicate, is required for all commercial shipments regardless of value. The invoices must be affixed to the outside of the parcel or may be enclosed in PS Form 2976-E with the customs declaration.

Customs Forms Required (123)
First-Class Mail International items and Priority Mail International Flat Rate Envelopes and Small Flat Rate Priced Boxes:
PS Form 2976 (see 123.61)

Priority Mail International parcels:
PS Form 2976-A inside 2976-E (envelope)

Global Express Guaranteed (210) Price Group 5

Refer to Notice 123, *Price List*, for the applicable retail, commercial base, or commercial plus price.
Weight Limit: 70 lbs.

Insurance (212.5)

Insured Amount not over	Fee	Insured Amount not over	Fee
$100	No Fee	For document reconstruction insurance or non-document insurance coverage above $800, add $1.00 per $100 or fraction thereof, up to a maximum of $2,499 per shipment.	
200	$1.00		
300	2.00		
400	3.00		
500	4.00		
600	5.00		
700	6.00		
800	7.00	$2,499 max.	$24.00

Value Limit (212.1)
The maximum value of a GXG shipment to this country is $2,499 or a lesser amount if limited by content or value.

Size Limits (211.22)
The surface area of the address side of the item to be mailed must be large enough to completely contain the Global Express Guaranteed Air Waybill/Shipping Invoice (shipping label), postage, endorsement, and any applicable markings. The shipping label is approximately 5.5 inches high and 9.5 inches long.

Maximum length: 46 inches
Maximum width: 35 inches
Maximum height: 46 inches
Maximum length and girth combined: 108 inches

General Conditions for Mailing
See Publication 141, *Global Express Guaranteed Service Guide,* for information about areas served in the destination country, allowable contents, packaging and labeling requirements, tracking and tracing, service standards, and other conditions for mailing.

Express Mail International (220) Price Group 5

Refer to Notice 123, *Price List*, for the applicable retail, commercial base, or commercial plus price.
Weight Limit: 66 lbs.

Express Mail International — Flat Rate Envelope and Flat Rate Boxes
The maximum weight for the Express Mail International Flat Rate Envelope and the Express Mail International Flat Rate Boxes is 20 pounds. Refer to Notice 123, *Price List*, for the applicable retail, commercial base, or commercial plus price.

Insurance (222.8)
Available for **Express Mail International merchandise shipments** only

Insured Amount not over	Fee
$100	No Fee
200	$0.85
500	2.35
650 max.	3.85

Articles Admitted	Required Customs Form/Endorsement
Business papers, documents, microfilm, and microfiche.	PS Form 2976, *Customs — CN 22 and Sender's Declaration.*
Merchandise samples without commercial value.	PS Form 2976, *Customs — CN 22 and Sender's Declaration.*
Merchandise and all articles subject to customs duty.	PS Form 2976-A, *Customs Declaration and Dispatch Note CP 72,* inside a PS Form 2976-E, *Customs Declaration Envelope CP 91.* An invoice, in duplicate, is required for all commercial shipments regardless of value and all personal shipments valued at $300 or more. The invoices must be either affixed to the outside of the parcel or enclosed in PS Form 2976-E with the customs declaration.

Size Limits (221.52)
Maximum length: 60 inches
Maximum length and girth combined: 108 inches

Notes:
1. An invoice, in duplicate, is required for all commercial shipments regardless of value. The invoices must be either affixed to the outside of the parcel or enclosed in PS Form 2976-E with the customs declaration.
2. Arms, weapons, and human remains are prohibited.
3. Coins; banknotes; currency notes, including paper money; securities of any kind payable to bearer; traveler's checks; platinum, gold, and silver; precious stones; jewelry; watches; and other valuable articles are prohibited in Express Mail International shipments to Finland.
4. An Express Mail International shipment may be addressed to a street address or to a post office box. A local telephone number for the addressee should be provided when the item is addressed to a street address and must be provided when the item is addressed to a post office box.

Reciprocal Service Name: Express Mail Service/ EMS Erikoispika

Country Code: FI

Areas Served: All

Priority Mail International (230) Price Group 5

Refer to Notice 123, *Price List*, for the applicable retail, commercial base, or commercial plus price.
Weight Limit: 70 lbs.

Note: *Ordinary Priority Mail International includes indemnity at no cost based on weight. (See 230.)*

Priority Mail International — Flat Rate
Flat Rate Envelopes or Small Flat Rate Priced Boxes: The maximum weight is 4 pounds. Refer to Notice 123, *Price List*, for the applicable retail, commercial base, or commercial plus price.

Flat Rate Boxes — Medium and Large: The maximum weight is 20 pounds, or the limit set by the individual country, whichever is less. Refer to Notice 123, *Price List*, for the retail, commercial base, or commercial plus price.

Insurance (232.92)
Available for **Priority Mail International merchandise parcels** only (see 323.72 for markings)

Insured Amount not over	Fee
$50	$2.45
100	3.60
200	4.75
300	5.90
400	7.05
500	8.20
600	9.35
650 max.	10.50

Size Limits (231.22)
Maximum length: 60 inches
Maximum length and girth combined: 108 inches

First-Class Mail International (240) Price Group 5
For the prices and maximum weights for letters, large envelopes (flats), packages (small packets), and postcards, see Notice 123, *Price List*.

Size Limits
Letters: See 241.212
Postcards: See 241.221
Large Envelopes (Flats): See 241.232
Packages (Small Packets): See 241.242 and 241.243

Airmail M-bags (260) — Direct Sack to One Addressee Price Group 5

Refer to Notice 123, *Price List*, for the applicable retail, commercial base, or commercial plus price.
Weight Limit: 66 lbs.

Matter for the Blind (270)
Free when sent as First-Class Mail International, including Priority Mail International Flat Rate Envelopes and Small Flat Rate Priced Boxes. Weight limit: 4 pounds.
Free when sent as Priority Mail International. Weight limit: 15 pounds.

Extra Services

Certificate of Mailing (313)

Individual Pieces	Fee
Individual article (PS Form 3817)	$1.15
Firm mailing books (PS Form 3877), per article listed (minimum 3)	0.44
Duplicate copy of PS Form 3817 or PS Form 3877 (per page)	1.15
Bulk Quantities	**Fee**
First 1,000 pieces (or fraction thereof)	$6.70
Each additional 1,000 pieces (or fraction thereof)	0.80
Duplicate copy of PS Form 3606	1.15

COD and Certified **NOT** for International Mail

International Business Reply Service (382)
Fee: Envelopes up to 2 ounces $1.50; Cards $1.00

International Postal Money Order (371)
NOT Available

International Reply Coupons (381) **Fee:** $2.20

Registered Mail (330) **Fee:** $11.75
Maximum Indemnity: $47.33
Available for First-Class Mail International, including postcards and Flat Rate Envelopes and Small Flat Rate Priced Boxes, and matter for the blind or other physically handicapped persons. Not applicable to M-bags.

Restricted Delivery (350) **Fee:** $4.55
Available for registered mail with or without a return receipt.
Endorsements: A remettre en main propre.

Return Receipt (340) **Fee:** $2.35
Available for registered mail and insured Priority Mail International parcels only.

France
(Includes Corsica and Monaco)

Country Conditions for Mailing

Prohibitions (130)
Arms, ammunition.
Cigarette lighters using butane gas.
Feeding bottles.
Funeral urns.
Goods bearing false marks of French manufacture or origin.
Human remains.
Imitation pearls containing lead salts and any articles of jewelry made with pearls of this type.
Live plants and animals.
Measuring instruments marked in units not complying with French law.
Perishable infectious biological substances except as noted in Restrictions below.
Perishable noninfectious biological substances except as noted under Restrictions below.
Radioactive materials.
Saccharine in tablets or packets.

Restrictions
Bees, honey, and beeswax must be accompanied by a certificate of origin and noninfection issued by a qualified official approved by the Government. Shipments of honey not exceeding 2 kilograms do not require the certificate.
Books in the French language printed abroad must have the names of the publisher and printer shown as prescribed by the French copyright laws.
Canned vegetables, fish, plums, and nuts not bearing an indication of the country of origin by stamping, in plain raised or sunken letters at least 4 millimeters high, in the middle of the top or bottom and in a place not bearing any inscription.
Gold coins or other articles of gold require that the addressee have a permit issued by the Bank of France (not required for gold-plated articles or for ornaments or jewelry containing only small amounts of gold and weighing 500 grams or less).
Medicines and medicinal products require an import license issued by the Central Pharmaceutical Service of the Ministry of Health.
Perishable biological substances, infectious and noninfectious, are admitted when addressed to the following laboratories:
(1) Pasteur Institute
25 rue du docteur Roux
75724 Paris CEDEX 14
FRANCE
(2) Pasteur Institute
1 rue du Professeur Calmette
59019 Lille CEDEX BB 245
FRANCE
(3) Pasteur Institute
77 rue Pasteur
69365 Lyon CEDEX
FRANCE
Plants, seeds, bulbs must be accompanied by plant health certificate.
The importation of tobacco leaves and stems, manufactured tobaccos, cigars, cigarettes, chewing and smoking tobacco is permitted only on behalf of the State Monopoly, with the following exception: Manufactured tobaccos, including cigars and cigarettes, may be sent to individuals in France for personal use up to 10 kilograms (22 pounds) per person per year, subject to special customs authorization.

Observations
1. A parcel may be addressed to a street address or to a post office box. A local telephone number for the addressee should be provided when the item is addressed to a street address and must be provided when the item is addressed to a post office box.
2. For parcels, an invoice, in duplicate, is required for all commercial shipments regardless of value and all personal shipments valued at $300 or more. The invoices must be affixed to the outside of the parcel or may be enclosed in PS Form 2976-E with the customs declaration.
3. It is recommended that all articles bear, as part of the address, the name of the Province in which the office of destination is located.
4. Printed matter of value should have Form 2976 affixed, and it can be cleared more readily through French customs if an invoice is enclosed.
5. Parcels whose senders or addressees are designated by initials will not be admitted.
6. Shipments must not be fastened by means of wire, but straps not having sharp edges may be used, provided they are tightly fastened so that no sharp ends or corners are exposed.

Customs Forms Required (123)
First-Class Mail International items and Priority Mail International Flat Rate Envelopes and Small Flat Rate Priced Boxes:
PS Form 2976 (see 123.61)
Priority Mail International parcels:
PS Form 2976-A inside 2976-E (envelope)

Global Express Guaranteed (210) Price Group 3

Refer to Notice 123, *Price List*, for the applicable retail, commercial base, or commercial plus price.
Weight Limit: 70 lbs.

Insurance (212.5)

Insured Amount not over	Fee	Insured Amount not over	Fee
$100	No Fee	For document reconstruction insurance or non-document insurance coverage above $800, add $1.00 per $100 or fraction thereof, up to a maximum of $2,499 per shipment.	
200	$1.00		
300	2.00		
400	3.00		
500	4.00		
600	5.00		
700	6.00		
800	7.00	$2,499 max.	$24.00

Value Limit (212.1)
The maximum value of a GXG shipment to this country is $2,499 or a lesser amount if limited by content or value.

Size Limits (211.22)
The surface area of the address side of the item to be mailed must be large enough to completely contain the Global Express Guaranteed Air Waybill/Shipping Invoice (shipping label), postage, endorsement, and any applicable markings. The shipping label is approximately 5.5 inches high and 9.5 inches long.
Maximum length: 46 inches
Maximum width: 35 inches
Maximum height: 46 inches
Maximum length and girth combined: 108 inches

General Conditions for Mailing

See Publication 141, *Global Express Guaranteed Service Guide,* for information about areas served in the destination country, allowable contents, packaging and labeling requirements, tracking and tracing, service standards, and other conditions for mailing.

Express Mail International (220) Price Group 13

Refer to Notice 123, *Price List*, for the applicable retail, commercial base, or commercial plus price.
Weight Limit: 66 lbs.

Express Mail International — Flat Rate Envelope and Flat Rate Boxes

The maximum weight for the Express Mail International Flat Rate Envelope and the Express Mail International Flat Rate Boxes is 20 pounds. Refer to Notice 123, *Price List*, for the applicable retail, commercial base, or commercial plus price.

Insurance (222.8)

Available for **Express Mail International merchandise shipments** only

Insured Amount not over	**Fee**
$100	No Fee
200	$0.85
500	2.35
650 max.	3.85

Articles Admitted	Required Customs Form/Endorsement
Business correspondence, commercial papers and documents.	PS Form 2976, *Customs — CN 22 and Sender's Declaration.*
Merchandise samples, gifts, computer data including computer cards, magnetic tape, microfilm, and microfiche.	PS Form 2976-A, *Customs Declaration and Dispatch Note CP 72,* inside a PS Form 2976-E, *Customs Declaration Envelope CP 91.*
Merchandise and all articles subject to customs duty.	PS Form 2976-A, *Customs Declaration and Dispatch Note CP 72,* inside a PS Form 2976-E, *Customs Declaration Envelope CP 91.* An invoice, in duplicate, is required for all commercial shipments regardless of value and all personal shipments valued at $300 or more. The invoices must be either affixed to the outside of the parcel or enclosed in PS Form 2976-E with the customs declaration.

Size Limits (221.52)

Maximum length: 60 inches
Maximum length and girth combined: 108 inches

Notes:

1. Arms, weapons, and human remains are prohibited.
2. An invoice, in duplicate, is required for all commercial shipments regardless of value and for all personal shipments valued at $300 or more. The invoices must be either affixed to the outside of the parcel or enclosed in PS Form 2976-E with the customs declaration.
3. Indicate precise description of documents, gifts, merchandise samples, and merchandise.
4. For personal gifts, merchandise samples, and merchandise, indicate the value of the contents expressed in U.S. dollars or French francs.
5. Label gift packages clearly as GIFT or CADEAU and merchandise samples as SAMPLES.
6. Coins; banknotes; currency notes, including paper money; securities of any kind payable to bearer; traveler's checks; platinum, gold, and silver; precious stones; jewelry; watches; and other valuable articles are prohibited in Express Mail International shipments to France (including Corsica and Monaco).
7. An Express Mail International shipment may be addressed to a street address or to a post office box. A local telephone number for the addressee should be provided when the item is addressed to a street address and must be provided when the item is addressed to a post office box.
8. Express Mail International With Guarantee service — which offers a date-certain, postage-refund guarantee — is available to France but not to Corsica or Monaco.

Reciprocal Service Name: There is no reciprocal service.

Country Code: FR

Areas Served:

All locations in France, Corsica, and Monaco are served.

Priority Mail International (230) Price Group 13

Refer to Notice 123, *Price List*, for the applicable retail, commercial base, or commercial plus price.
Weight Limit: 66 lbs.

Note: *Ordinary Priority Mail International includes indemnity at no cost based on weight. (See 230.)*

Priority Mail International — Flat Rate

Flat Rate Envelopes or Small Flat Rate Priced Boxes: The maximum weight is 4 pounds. Refer to Notice 123, *Price List*, for the applicable retail, commercial base, or commercial plus price.

Flat Rate Boxes — Medium and Large: The maximum weight is 20 pounds, or the limit set by the individual country, whichever is less. Refer to Notice 123, *Price List*, for the retail, commercial base, or commercial plus price.

Insurance (232.92)

Available for **Priority Mail International merchandise parcels** only (see 323.72 for markings)

Insured Amount not over	**Fee**
$50	$2.45
100	3.60
200	4.75
300	5.90
400	7.05
500	8.20
600	9.35
650 max.	10.50

Size Limits (231.22)
Maximum length: 60 inches
Maximum length and girth combined: 108 inches

First-Class Mail International (240) Price Group 5
For the prices and maximum weights for letters, large envelopes (flats), packages (small packets), and postcards, see Notice 123, *Price List*.

Size Limits
Letters: See 241.212
Postcards: See 241.221
Large Envelopes (Flats): See 241.232
Packages (Small Packets): See 241.242 and 241.243

Airmail M-bags (260) — Direct Sack to One Addressee Price Group 5

Refer to Notice 123, *Price List*, for the applicable retail, commercial base, or commercial plus price.
Weight Limit: 66 lbs.

Matter for the Blind (270)
Free when sent as First-Class Mail International, including Priority Mail International Flat Rate Envelopes and Small Flat Rate Priced Boxes. Weight limit: 4 pounds.
Free when sent as Priority Mail International. Weight limit: 15 pounds.

Extra Services

Certificate of Mailing (313)

Individual Pieces	**Fee**
Individual article (PS Form 3817)	$1.15
Firm mailing books (PS Form 3877), per article listed (minimum 3)	0.44
Duplicate copy of PS Form 3817 or PS Form 3877 (per page)	1.15
Bulk Quantities	**Fee**
First 1,000 pieces (or fraction thereof)	$6.70
Each additional 1,000 pieces (or fraction thereof)	0.80
Duplicate copy of PS Form 3606	1.15

COD and Certified **NOT** for International Mail

International Business Reply Service (382)
Fee: Envelopes up to 2 ounces $1.50; Cards $1.00

International Postal Money Order (371)
NOT Available

International Reply Coupons (381) **Fee:** $2.20

Registered Mail (330) **Fee:** $11.75
Maximum Indemnity: $47.33
Available for First-Class Mail International, including postcards and Flat Rate Envelopes and Small Flat Rate Priced Boxes, and matter for the blind or other physically handicapped persons. Not applicable to M-bags.

Restricted Delivery (350) NOT Available

Return Receipt (340) **Fee:** $2.35
Available for registered mail and insured Priority Mail International parcels only.

French Guiana

Country Conditions for Mailing

Prohibitions (130)
Perishable infectious biological substances.
Perishable noninfectious biological substances.
Radioactive materials.
Otherwise, same as for France.

Restrictions
Coins; banknotes; currency notes; securities payable to bearer; traveler's checks; manufactured and unmanufactured platinum, gold, and silver; precious stones; jewelry; and other valuable articles, may only be sent in registered First-Class Mail International shipments.
Otherwise, same as for France, with the exception of tobacco, which may be imported.

Observations
Invoices and certificates of origin are required as for France.

Customs Forms Required (123)
First-Class Mail International items and Priority Mail International Flat Rate Envelopes and Small Flat Rate Priced Boxes:
PS Form 2976 (see 123.61)
Priority Mail International parcels:
PS Form 2976-A inside 2976-E (envelope)

Global Express Guaranteed (210) Price Group 8

Refer to Notice 123, *Price List*, for the applicable retail, commercial base, or commercial plus price.
Weight Limit: 70 lbs.

Insurance (212.5)

Insured Amount not over	Fee	Insured Amount not over	Fee
$100	No Fee	For document reconstruction insurance or non-document insurance coverage above $800, add $1.00 per $100 or fraction thereof, up to a maximum of $2,499 per shipment.	
200	$1.00		
300	2.00		
400	3.00		
500	4.00		
600	5.00		
700	6.00		
800	7.00	$2,499 max.	$24.00

Value Limit (212.1)
The maximum value of a GXG shipment to this country is $2,499 or a lesser amount if limited by content or value.

Size Limits (211.22)
The surface area of the address side of the item to be mailed must be large enough to completely contain the Global Express Guaranteed Air Waybill/Shipping Invoice (shipping label), postage, endorsement, and any applicable markings. The shipping label is approximately 5.5 inches high and 9.5 inches long.
Maximum length: 46 inches
Maximum width: 35 inches
Maximum height: 46 inches
Maximum length and girth combined: 108 inches

General Conditions for Mailing
See Publication 141, *Global Express Guaranteed Service Guide,* for information about areas served in the destination country, allowable contents, packaging and labeling requirements, tracking and tracing, service standards, and other conditions for mailing.

Express Mail International (220) Price Group 9

Refer to Notice 123, *Price List*, for the applicable retail, commercial base, or commercial plus price.
Weight Limit: 66 lbs.

Express Mail International — Flat Rate Envelope and Flat Rate Boxes
The maximum weight for the Express Mail International Flat Rate Envelope and the Express Mail International Flat Rate Boxes is 20 pounds. Refer to Notice 123, *Price List*, for the applicable retail, commercial base, or commercial plus price.

Insurance (222.8)
Available for **Express Mail International merchandise shipments** only

Insured Amount not over	Fee	Insured Amount not over	Fee
$100	No Fee	For insurance coverage above $2,000, add $1.50 for each $500 or fraction thereof, up to a maximum of $5,000 per shipment.	
200	$0.85		
500	2.35		
1,000	3.85		
1,500	5.35		
2,000	6.85	$5,000 max.	$15.85

Articles Admitted	Required Customs Form/Endorsement
Correspondence and business papers.	PS Form 2976, *Customs — CN 22 and Sender's Declaration.* Endorse item clearly next to mailing label as BUSINESS PAPERS.
Merchandise samples without commercial value and not subject to customs duty.	PS Form 2976, *Customs — CN 22 and Sender's Declaration.*
Merchandise and all articles subject to customs duty.	PS Form 2976-A, *Customs Declaration and Dispatch Note CP 72,* inside a PS Form 2976-E, *Customs Declaration Envelope CP 91.* Include a commercial invoice in each item.

Size Limits (221.52)
Maximum length: 36 inches
Maximum length and girth combined: 79 inches

Note:
Coins; banknotes; currency notes, including paper money; securities of any kind payable to bearer; traveler's checks; platinum, gold, and silver; precious stones; jewelry; watches; and other valuable articles are prohibited in Express Mail International shipments to French Guiana. All items prohibited in regular international mail are also prohibited in Express Mail International to French Guiana.

Reciprocal Service Name: Chronopost

Country Code: GF

Areas Served: All

Priority Mail International (230) Price Group 9

Refer to Notice 123, *Price List*, for the applicable retail, commercial base, or commercial plus price.
Weight Limit: 66 lbs.

Note: *Ordinary Priority Mail International includes indemnity at no cost based on weight. (See 230.)*

Priority Mail International — Flat Rate

Flat Rate Envelopes or Small Flat Rate Priced Boxes: The maximum weight is 4 pounds. Refer to Notice 123, *Price List*, for the applicable retail, commercial base, or commercial plus price.

Flat Rate Boxes — Medium and Large: The maximum weight is 20 pounds, or the limit set by the individual country, whichever is less. Refer to Notice 123, *Price List*, for the retail, commercial base, or commercial plus price.

Insurance (232.92)

Available for **Priority Mail International merchandise parcels** only (see 323.72 for markings)

Insured Amount not over	Fee	Insured Amount not over	Fee
$50	$2.45		
100	3.60	Add $1.15 for each additional $100 or fraction of insurance coverage.	
200	4.75		
300	5.90		
400	7.05		
500	8.20	$5,000 max.	$59.95

Size Limits (231.22)

Maximum length: 42 inches
Maximum length and girth combined: 79 inches

First-Class Mail International (240) Price Group 9

For the prices and maximum weights for letters, large envelopes (flats), packages (small packets), and postcards, see Notice 123, *Price List*.

Size Limits

Letters: See 241.212
Postcards: See 241.221
Large Envelopes (Flats): See 241.232
Packages (Small Packets): See 241.242 and 241.243

Airmail M-bags (260) — Direct Sack to One Addressee Price Group 9

Refer to Notice 123, *Price List*, for the applicable retail, commercial base, or commercial plus price.
Weight Limit: 66 lbs.

Matter for the Blind (270)

Free when sent as First-Class Mail International, including Priority Mail International Flat Rate Envelopes and Small Flat Rate Priced Boxes. Weight limit: 4 pounds.
Free when sent as Priority Mail International. Weight limit: 15 pounds.

Extra Services

Certificate of Mailing (313)

Individual Pieces	Fee
Individual article (PS Form 3817)	$1.15
Firm mailing books (PS Form 3877), per article listed (minimum 3)	0.44
Duplicate copy of PS Form 3817 or PS Form 3877 (per page)	1.15
Bulk Quantities	**Fee**
First 1,000 pieces (or fraction thereof)	$6.70
Each additional 1,000 pieces (or fraction thereof)	0.80
Duplicate copy of PS Form 3606	1.15

COD and Certified **NOT** for International Mail

International Business Reply Service (382)

Fee: Envelopes up to 2 ounces $1.50; Cards $1.00

International Postal Money Order (371)

NOT Available

International Reply Coupons (381) **Fee:** $2.20

Registered Mail (330) **Fee:** $11.75

Maximum Indemnity: $47.33
Available for First-Class Mail International, including postcards and Flat Rate Envelopes and Small Flat Rate Priced Boxes, and matter for the blind or other physically handicapped persons. Not applicable to M-bags.

Restricted Delivery (350) NOT Available

Return Receipt (340) **Fee:** $2.35

Available for registered mail and insured Priority Mail International parcels only.

French Polynesia
(Includes Tahiti)

Country Conditions for Mailing

Prohibitions (130)
Coins; currency notes (paper money); securities payable to bearer; traveler's checks; manufactured and unmanufactured platinum, gold, silver; precious stones; jewelry; and other valuable articles.
Perishable infectious biological substances.
Perishable noninfectious biological substances.
Radioactive materials.

Restrictions
Banknotes admitted only in registered First-Class Mail International.

Observations
None

Customs Forms Required (123)
First-Class Mail International items and Priority Mail International Flat Rate Envelopes and Small Flat Rate Priced Boxes:
PS Form 2976 (see 123.61)
Priority Mail International parcels:
PS Form 2976-A inside 2976-E (envelope)

Global Express Guaranteed (210) Price Group 4

Refer to Notice 123, *Price List*, for the applicable retail, commercial base, or commercial plus price.
Weight Limit: 70 lbs.

Insurance (212.5)

Insured Amount not over	Fee	Insured Amount not over	Fee
$100	No Fee	For document reconstruction insurance or non-document insurance coverage above $800, add $1.00 per $100 or fraction thereof, up to a maximum of $2,499 per shipment.	
200	$1.00		
300	2.00		
400	3.00		
500	4.00		
600	5.00		
700	6.00		
800	7.00	$2,499 max.	$24.00

Value Limit (212.1)
The maximum value of a GXG shipment to this country is $2,499 or a lesser amount if limited by content or value.

Size Limits (211.22)
The surface area of the address side of the item to be mailed must be large enough to completely contain the Global Express Guaranteed Air Waybill/Shipping Invoice (shipping label), postage, endorsement, and any applicable markings. The shipping label is approximately 5.5 inches high and 9.5 inches long.
Maximum length: 46 inches
Maximum width: 35 inches
Maximum height: 46 inches
Maximum length and girth combined: 108 inches

General Conditions for Mailing
See Publication 141, *Global Express Guaranteed Service Guide,* for information about areas served in the destination country, allowable contents, packaging and labeling requirements, tracking and tracing, service standards, and other conditions for mailing.

Express Mail International (220) Price Group 6

Refer to Notice 123, *Price List*, for the applicable retail, commercial base, or commercial plus price.
Weight Limit: 66 lbs.

Express Mail International — Flat Rate Envelope and Flat Rate Boxes
The maximum weight for the Express Mail International Flat Rate Envelope and the Express Mail International Flat Rate Boxes is 20 pounds. Refer to Notice 123, *Price List*, for the applicable retail, commercial base, or commercial plus price.

Insurance (222.8)
Available for **Express Mail International merchandise shipments** only

Insured Amount not over	Fee	Insured Amount not over	Fee
$100	No Fee	For insurance coverage above $2,000, add $1.50 for each $500 or fraction thereof, up to a maximum of $5,000 per shipment.	
200	$0.85		
500	2.35		
1,000	3.85		
1,500	5.35		
2,000	6.85	$5,000 max.	$15.85

Articles Admitted	Required Customs Form/Endorsement
Correspondence, and business papers. Clearly endorse item clearly next to mailing label as BUSINESS PAPERS.	PS Form 2976, *Customs — CN 22 and Sender's Declaration.*
Merchandise samples without commercial value and not subject to customs duty.	PS Form 2976, *Customs — CN 22 and Sender's Declaration.*
Merchandise and all articles subject to customs duty.	PS Form 2976-A, *Customs Declaration and Dispatch Note CP 72,* inside a PS Form 2976-E, *Customs Declaration Envelope CP 91.* A commercial invoice must be included in each item.

Size Limits (221.52)
Maximum length: 36 inches
Maximum length and girth combined: 79 inches

Notes:
1. Coins; banknotes; currency notes, including paper money; securities of any kind payable to bearer; traveler's checks; platinum, gold, and silver; precious stones; jewelry; watches; and other valuable articles are prohibited in Express Mail International shipments to French Polynesia.
2. All items admissible in international mail to French Polynesia, including correspondence, business papers, and merchandise, are accepted in Express Mail International.
3. All items prohibited in regular international mail are also prohibited in Express Mail International to French Polynesia.
4. Items are delivered Monday through Saturday. There is no delivery on national holidays.

Reciprocal Service Name: Chronopost

Country Code: PF

Areas Served: Arue, Faa, Mahina, Papeete, Pirae, Punaaiua

Priority Mail International (230) Price Group 6

Refer to Notice 123, *Price List*, for the applicable retail, commercial base, or commercial plus price.
Weight Limit: 66 lbs.

Note: *Ordinary Priority Mail International includes indemnity at no cost based on weight. (See 230.)*

Priority Mail International — Flat Rate

Flat Rate Envelopes or Small Flat Rate Priced Boxes: The maximum weight is 4 pounds. Refer to Notice 123, *Price List*, for the applicable retail, commercial base, or commercial plus price.

Flat Rate Boxes — Medium and Large: The maximum weight is 20 pounds, or the limit set by the individual country, whichever is less. Refer to Notice 123, *Price List*, for the retail, commercial base, or commercial plus price.

Insurance (232.92)

Available for **Priority Mail International merchandise parcels** only (see 323.72 for markings)

Insured Amount not over	Fee	Insured Amount not over	Fee
$50	$2.45	Add $1.15 for each additional $100 or fraction of insurance coverage.	
100	3.60		
200	4.75		
300	5.90		
400	7.05		
500	8.20	$4,519 max.	$55.35

Size Limits (231.22)

Maximum length: 42 inches
Maximum length and girth combined: 79 inches

First-Class Mail International (240) Price Group 6

For the prices and maximum weights for letters, large envelopes (flats), packages (small packets), and postcards, see Notice 123, *Price List*.

Size Limits

Letters: See 241.212
Postcards: See 241.221
Large Envelopes (Flats): See 241.232
Packages (Small Packets): See 241.242 and 241.243

Airmail M-bags (260) — Direct Sack to One Addressee Price Group 6

Refer to Notice 123, *Price List*, for the applicable retail, commercial base, or commercial plus price.
Weight Limit: 66 lbs.

Matter for the Blind (270)

Free when sent as First-Class Mail International, including Priority Mail International Flat Rate Envelopes and Small Flat Rate Priced Boxes. Weight limit: 4 pounds.
Free when sent as Priority Mail International. Weight limit: 15 pounds.

Extra Services

Certificate of Mailing (313)

Individual Pieces	Fee
Individual article (PS Form 3817)	$1.15
Firm mailing books (PS Form 3877), per article listed (minimum 3)	0.44
Duplicate copy of PS Form 3817 or PS Form 3877 (per page)	1.15
Bulk Quantities	**Fee**
First 1,000 pieces (or fraction thereof)	$6.70
Each additional 1,000 pieces (or fraction thereof)	0.80
Duplicate copy of PS Form 3606	1.15

COD and Certified

NOT for International Mail

International Business Reply Service (382)

Fee: Envelopes up to 2 ounces $1.50; Cards $1.00

International Postal Money Order (371)

NOT Available

International Reply Coupons (381)

Fee: $2.20

Registered Mail (330)

Fee: $11.75

Maximum Indemnity: $47.33
Available for First-Class Mail International, including postcards and Flat Rate Envelopes and Small Flat Rate Priced Boxes, and matter for the blind or other physically handicapped persons. Not applicable to M-bags.

Restricted Delivery (350)

NOT Available

Return Receipt (340)

Fee: $2.35

Available for registered mail and insured Priority Mail International parcels only.

Gabon

Country Conditions for Mailing

Prohibitions (130)

All articles prohibited to France.
Coins; banknotes; currency notes; securities payable to bearer; traveler's checks; manufactured and unmanufactured platinum, gold, silver; precious stones; jewelry; and other valuable articles.
Perishable infectious biological substances.
Perishable noninfectious biological substances.
Pamphlets and leaflets containing propaganda derogatory to the countries of Equatorial Africa.
Radioactive materials.
Tobacco, cigars and cigarettes.

Restrictions

Medical or pharmaceutical products may only be addressed to licensed pharmacists.

Observations

None

Customs Forms Required (123)

First-Class Mail International items and Priority Mail International Flat Rate Envelopes and Small Flat Rate Priced Boxes:
PS Form 2976 (see 123.61)
Priority Mail International parcels:
PS Form 2976-A inside 2976-E (envelope)

Global Express Guaranteed (210) Price Group 4

Refer to Notice 123, *Price List*, for the applicable retail, commercial base, or commercial plus price.
Weight Limit: 70 lbs.

Insurance (212.5)

Insured Amount not over	Fee	Insured Amount not over	Fee
$100	No Fee	For document reconstruction insurance or non-document insurance coverage above $800, add $1.00 per $100 or fraction thereof, up to a maximum of $2,499 per shipment.	
200	$1.00		
300	2.00		
400	3.00		
500	4.00		
600	5.00		
700	6.00		
800	7.00	$2,499 max.	$24.00

Value Limit (212.1)

The maximum value of a GXG shipment to this country is $2,499 or a lesser amount if limited by content or value.

Size Limits (211.22)

The surface area of the address side of the item to be mailed must be large enough to completely contain the Global Express Guaranteed Air Waybill/Shipping Invoice (shipping label), postage, endorsement, and any applicable markings. The shipping label is approximately 5.5 inches high and 9.5 inches long.
Maximum length: 46 inches
Maximum width: 35 inches
Maximum height: 46 inches
Maximum length and girth combined: 108 inches

General Conditions for Mailing

See Publication 141, *Global Express Guaranteed Service Guide,* for information about areas served in the destination country, allowable contents, packaging and labeling requirements, tracking and tracing, service standards, and other conditions for mailing.

Express Mail International (220) Price Group 7

Refer to Notice 123, *Price List*, for the applicable retail, commercial base, or commercial plus price.
Weight Limit: 66 lbs.

Express Mail International — Flat Rate Envelope and Flat Rate Boxes

The maximum weight for the Express Mail International Flat Rate Envelope and the Express Mail International Flat Rate Boxes is 20 pounds. Refer to Notice 123, *Price List*, for the applicable retail, commercial base, or commercial plus price.

Insurance (222.8)

Available for **Express Mail International merchandise shipments** only

Insured Amount not over	Fee	Insured Amount not over	Fee
$100	No Fee	For insurance coverage above $2,000, add $1.50 for each $500 or fraction thereof, up to a maximum of $5,000 per shipment.	
200	$0.85		
500	2.35		
1,000	3.85		
1,500	5.35		
2,000	6.85	$5,000 max.	$15.85

Articles Admitted	Required Customs Form/Endorsement
Correspondence and business papers.	PS Form 2976, *Customs — CN 22 and Sender's Declaration.* Endorse item clearly next to mailing label as BUSINESS PAPERS.
Merchandise samples without commercial value.	PS Form 2976, *Customs — CN 22 and Sender's Declaration.*
Merchandise and all articles subject to customs duty.	PS Form 2976-A, *Customs Declaration and Dispatch Note CP 72,* inside a PS Form 2976-E, *Customs Declaration Envelope CP 91.* A commercial invoice in duplicate should be included with all commercial shipments.

Size Limits (221.52)
Maximum length: 36 inches
Maximum length and girth combined: 79 inches

Note:
Coins; banknotes; currency notes, including paper money; securities of any kind payable to bearer; traveler's checks; platinum, gold, and silver; precious stones; jewelry; watches; and other valuable articles are prohibited in Express Mail International shipments to Gabon.

Reciprocal Service Name: EMS Delta Plus

Country Code: GA

Areas Served:

Bitam	Mounana
Franceville	Oyem
Libreville	Port-Gentil
Moanda	

Priority Mail International (230) Price Group 7

Refer to Notice 123, *Price List*, for the applicable retail, commercial base, or commercial plus price.
Weight Limit: 44 lbs.

Note: *Ordinary Priority Mail International includes indemnity at no cost based on weight. (See 230.)*

Priority Mail International — Flat Rate
Flat Rate Envelopes or Small Flat Rate Priced Boxes: The maximum weight is 4 pounds. Refer to Notice 123, *Price List*, for the applicable retail, commercial base, or commercial plus price.

Flat Rate Boxes — Medium and Large: The maximum weight is 20 pounds, or the limit set by the individual country, whichever is less. Refer to Notice 123, *Price List*, for the retail, commercial base, or commercial plus price.

Insurance (232.92)
Available for **Priority Mail International merchandise parcels** only (see 323.72 for markings)

Insured Amount not over	Fee
$50	$2.45
100	3.60
200	4.75
300	5.90
400	7.05
500	8.20
523 max.	9.35

Size Limits (231.22)
Maximum length: 42 inches
Maximum length and girth combined: 79 inches

First-Class Mail International (240) Price Group 7
For the prices and maximum weights for letters, large envelopes (flats), packages (small packets), and postcards, see Notice 123, *Price List*.

Size Limits
Letters: See 241.212
Postcards: See 241.221
Large Envelopes (Flats): See 241.232
Packages (Small Packets): See 241.242 and 241.243

Airmail M-bags (260) — Direct Sack to One Addressee Price Group 7

Refer to Notice 123, *Price List*, for the applicable retail, commercial base, or commercial plus price.
Weight Limit: 66 lbs.

Matter for the Blind (270) NOT Available

Extra Services

Certificate of Mailing (313)

Individual Pieces	Fee
Individual article (PS Form 3817)	$1.15
Firm mailing books (PS Form 3877), per article listed (minimum 3)	0.44
Duplicate copy of PS Form 3817 or PS Form 3877 (per page)	1.15
Bulk Quantities	**Fee**
First 1,000 pieces (or fraction thereof)	$6.70
Each additional 1,000 pieces (or fraction thereof)	0.80
Duplicate copy of PS Form 3606	1.15

COD and Certified **NOT** for International Mail

International Business Reply Service (382)
Fee: Envelopes up to 2 ounces $1.50; Cards $1.00

International Postal Money Order (371)
NOT Available

International Reply Coupons (381) **Fee:** $2.20

Registered Mail (330) **Fee:** $11.75
Maximum Indemnity: $47.33
Available for First-Class Mail International, including postcards and Flat Rate Envelopes and Small Flat Rate Priced Boxes, and matter for the blind or other physically handicapped persons. Not applicable to M-bags.

Restricted Delivery (350) NOT Available

Return Receipt (340) **Fee:** $2.35
Available for registered mail and insured Priority Mail International parcels only.

Gambia

Country Conditions for Mailing

Prohibitions (130)
Coins, West African paper money.
Firearms and firearm parts.

Restrictions
Banknotes; currency notes; securities payable to bearer; traveler's checks; manufactured and unmanufactured platinum, gold, silver; precious stones; jewelry; and other valuable articles may be sent only in registered First-Class Mail International shipments.

Observations
None

Customs Forms Required (123)
First-Class Mail International items and Priority Mail International Flat Rate Envelopes and Small Flat Rate Priced Boxes:
PS Form 2976 (see 123.61)
Priority Mail International parcels:
PS Form 2976-A inside 2976-E (envelope)

Global Express Guaranteed (210) Price Group 4

Refer to Notice 123, *Price List*, for the applicable retail, commercial base, or commercial plus price.
Weight Limit: 70 lbs.

Insurance (212.5)

Insured Amount not over	Fee	Insured Amount not over	Fee
$100	No Fee	For document reconstruction insurance or non-document insurance coverage above $800, add $1.00 per $100 or fraction thereof, up to a maximum of $2,499 per shipment.	
200	$1.00		
300	2.00		
400	3.00		
500	4.00		
600	5.00		
700	6.00		
800	7.00	$2,499 max.	$24.00

Value Limit (212.1)
The maximum value of a GXG shipment to this country is $2,499 or a lesser amount if limited by content or value.

Size Limits (211.22)
The surface area of the address side of the item to be mailed must be large enough to completely contain the Global Express Guaranteed Air Waybill/Shipping Invoice (shipping label), postage, endorsement, and any applicable markings. The shipping label is approximately 5.5 inches high and 9.5 inches long.
Maximum length: 46 inches
Maximum width: 35 inches
Maximum height: 46 inches
Maximum length and girth combined: 108 inches

General Conditions for Mailing
See Publication 141, *Global Express Guaranteed Service Guide,* for information about areas served in the destination country, allowable contents, packaging and labeling requirements, tracking and tracing, service standards, and other conditions for mailing.

Express Mail International (220)
Not Available

Priority Mail International (230) Price Group 7

Refer to Notice 123, *Price List*, for the applicable retail, commercial base, or commercial plus price.
Weight Limit: 66 lbs.

Note: *Ordinary Priority Mail International includes indemnity at no cost based on weight. (See 230.)*

Priority Mail International — Flat Rate
Flat Rate Envelopes or Small Flat Rate Priced Boxes: The maximum weight is 4 pounds. Refer to Notice 123, *Price List*, for the applicable retail, commercial base, or commercial plus price.

Flat Rate Boxes — Medium and Large: The maximum weight is 20 pounds, or the limit set by the individual country, whichever is less. Refer to Notice 123, *Price List*, for the retail, commercial base, or commercial plus price.

Insurance (232.92) NOT Available

Size Limits (231.22)
Maximum length: 42 inches
Maximum length and girth combined: 79 inches

First-Class Mail International (240) Price Group 7
For the prices and maximum weights for letters, large envelopes (flats), packages (small packets), and postcards, see Notice 123, *Price List*.

Size Limits
Letters: See 241.212
Postcards: See 241.221
Large Envelopes (Flats): See 241.232
Packages (Small Packets): See 241.242 and 241.243

Airmail M-bags (260) — Direct Sack to One Addressee Price Group 7

Refer to Notice 123, *Price List*, for the applicable retail, commercial base, or commercial plus price.
Weight Limit: 66 lbs.

Matter for the Blind (270)
Free when sent as First-Class Mail International, including Priority Mail International Flat Rate Envelopes and Small Flat Rate Priced Boxes. Weight limit: 4 pounds.
Free when sent as Priority Mail International. Weight limit: 15 pounds.

Extra Services

Certificate of Mailing (313)

Individual Pieces	Fee
Individual article (PS Form 3817)	$1.15
Firm mailing books (PS Form 3877), per article listed (minimum 3)	0.44
Duplicate copy of PS Form 3817 or PS Form 3877 (per page)	1.15
Bulk Quantities	**Fee**
First 1,000 pieces (or fraction thereof)	$6.70
Each additional 1,000 pieces (or fraction thereof)	0.80
Duplicate copy of PS Form 3606	1.15

COD and Certified

NOT for International Mail

International Business Reply Service (382)

Fee: Envelopes up to 2 ounces $1.50; Cards $1.00

International Postal Money Order (371)

NOT Available

International Reply Coupons (381)

Fee: $2.20

Registered Mail (330)

Fee: $11.75

Maximum Indemnity: $47.33
Available for First-Class Mail International, including postcards and Flat Rate Envelopes and Small Flat Rate Priced Boxes, and matter for the blind or other physically handicapped persons. Not applicable to M-bags.

Restricted Delivery (350)

Fee: $4.55

Available for registered mail with a return receipt.
Endorsements: A remettre en main propre.

Return Receipt (340)

Fee: $2.35

Available for registered mail only.

Georgia, Republic of

Country Conditions for Mailing

Prohibitions (130)

Articles and materials of an immoral nature.
Bees, leeches, silkworms, and parasites.
Coins; bank notes; currency notes (paper money); securities of any kind payable to bearer; traveler's checks; platinum, gold, and silver (manufactured or not); precious stones; jewelry; and other valuable articles in all mail.
Explosives, inflammable substances, toxic substances, and other dangerous substances.
Narcotics, psychotropic substances, and hormone and blood preparations.
Perishable infectious biological substances.
Perishable noninfectious biological substances.
Radioactive materials.
Tear gas, nerve gas, and weapons for their use.
Weapons of war and firearms, ammunition, and cartridges.

Restrictions

Medical preparations require prior authorization from the Georgian Ministry of Health.

Observations

None.

Customs Forms Required (123)

First-Class Mail International items and Priority Mail International Flat Rate Envelopes and Small Flat Rate Priced Boxes:
PS Form 2976 (see 123.61)
Priority Mail International parcels:
PS Form 2976-A inside 2976-E (envelope)

Global Express Guaranteed (210) Price Group 4

Refer to Notice 123, *Price List*, for the applicable retail, commercial base, or commercial plus price.

Weight Limit: 70 lbs.

Insurance (212.5)

Insured Amount not over	Fee	Insured Amount not over	Fee
$100	No Fee	For document reconstruction insurance or non-document insurance coverage above $800, add $1.00 per $100 or fraction thereof, up to a maximum of $2,499 per shipment.	
200	$1.00		
300	2.00		
400	3.00		
500	4.00		
600	5.00		
700	6.00		
800	7.00	$2,499 max.	$24.00

Value Limit (212.1)

The maximum value of a GXG shipment to this country is $2,499 or a lesser amount if limited by content or value.

Size Limits (211.22)

The surface area of the address side of the item to be mailed must be large enough to completely contain the Global Express Guaranteed Air Waybill/Shipping Invoice (shipping label), postage, endorsement, and any applicable markings. The shipping label is approximately 5.5 inches high and 9.5 inches long.
Maximum length: 46 inches
Maximum width: 35 inches
Maximum height: 46 inches
Maximum length and girth combined: 108 inches

General Conditions for Mailing

See Publication 141, *Global Express Guaranteed Service Guide,* for information about areas served in the destination country, allowable contents, packaging and labeling requirements, tracking and tracing, service standards, and other conditions for mailing.

Express Mail International (220) Price Group 4

Refer to Notice 123, *Price List*, for the applicable retail, commercial base, or commercial plus price.

Weight Limit: 66 lbs.

Express Mail International — Flat Rate Envelope and Flat Rate Boxes

The maximum weight for the Express Mail International Flat Rate Envelope and the Express Mail International Flat Rate Boxes is 20 pounds. Refer to Notice 123, *Price List*, for the applicable retail, commercial base, or commercial plus price.

Insurance (222.8)

Available for **Express Mail International merchandise shipments** only

Insured Amount not over	Fee	Insured Amount not over	Fee
$100	No Fee	For insurance coverage above $2,000, add $1.50 for each $500 or fraction thereof, up to a maximum of $5,000 per shipment.	
200	$0.85		
500	2.35		
1,000	3.85		
1,500	5.35		
2,000	6.85	$5,000 max.	$15.85

Articles Admitted	Required Customs Form/Endorsement
Correspondence, business papers, and documents.	PS Form 2976, *Customs — CN 22 and Sender's Declaration.* Endorse item clearly next to mailing label as BUSINESS PAPERS.
Merchandise samples without commercial value.	PS Form 2976-A, *Customs Declaration and Dispatch Note CP 72,* inside a PS Form 2976-E, *Customs Declaration Envelope CP 91.*
Merchandise and all articles subject to customs duty.	PS Form 2976-A, *Customs Declaration and Dispatch Note CP 72,* inside a PS Form 2976-E, *Customs Declaration Envelope CP 91.*

Size Limits (221.52)

Maximum length: 36 inches
Maximum length and girth combined: 79 inches

Notes:

1. Addressees are required to obtain import licenses/permits to receive most goods.
2. Coins; banknotes; currency notes, including paper money; securities of any kind payable to bearer; traveler's checks; platinum, gold, and silver; precious stones; jewelry; watches; and other valuable articles are prohibited in Express Mail International shipments to the Republic of Georgia.

Reciprocal Service Name: EMS

Country Code: GE

Areas Served:
Express Mail International is available ***only*** to the following locations: Garbadani, Marneouli, Mtskheta, Roustavi, Tbilisi.

Priority Mail International (230) Price Group 4

Refer to Notice 123, *Price List*, for the applicable retail, commercial base, or commercial plus price.
Weight Limit: 44 lbs.

Note: *Ordinary Priority Mail International includes indemnity at no cost based on weight. (See 230.)*

Priority Mail International — Flat Rate
Flat Rate Envelopes or Small Flat Rate Priced Boxes: The maximum weight is 4 pounds. Refer to Notice 123, *Price List*, for the applicable retail, commercial base, or commercial plus price.

Flat Rate Boxes — Medium and Large: The maximum weight is 20 pounds, or the limit set by the individual country, whichever is less. Refer to Notice 123, *Price List*, for the retail, commercial base, or commercial plus price.

Insurance (232.92)
Available for **Priority Mail International merchandise parcels** only (see 323.72 for markings)

Insured Amount not over	Fee	Insured Amount not over	Fee
$50	$2.45	Add $1.15 for each additional $100 or fraction of insurance coverage.	
100	3.60		
200	4.75		
300	5.90		
400	7.05		
500	8.20	$1,458 max.	$19.70

Size Limits (231.22)
Maximum length: 42 inches
Maximum length and girth combined: 79 inches

First-Class Mail International (240) Price Group 4
For the prices and maximum weights for letters, large envelopes (flats), packages (small packets), and postcards, see Notice 123, *Price List*.

Size Limits
Letters: See 241.212
Postcards: See 241.221
Large Envelopes (Flats): See 241.232
Packages (Small Packets): See 241.242 and 241.243

Airmail M-bags (260) — Direct Sack to One Addressee Price Group 4

Refer to Notice 123, *Price List*, for the applicable retail, commercial base, or commercial plus price.
Weight Limit: 66 lbs.

Matter for the Blind (270)
Free when sent as First-Class Mail International, including Priority Mail International Flat Rate Envelopes and Small Flat Rate Priced Boxes. Weight limit: 4 pounds.
Free when sent as Priority Mail International. Weight limit: 15 pounds.

Extra Services

Certificate of Mailing (313)

Individual Pieces	Fee
Individual article (PS Form 3817)	$1.15
Firm mailing books (PS Form 3877), per article listed (minimum 3)	0.44
Duplicate copy of PS Form 3817 or PS Form 3877 (per page)	1.15
Bulk Quantities	**Fee**
First 1,000 pieces (or fraction thereof)	$6.70
Each additional 1,000 pieces (or fraction thereof)	0.80
Duplicate copy of PS Form 3606	1.15

COD and Certified **NOT** for International Mail

International Business Reply Service (382)
Fee: Envelopes up to 2 ounces $1.50; Cards $1.00

International Postal Money Order (371)
NOT Available

International Reply Coupons (381) **Fee:** $2.20

Registered Mail (330) **Fee:** $11.75
Maximum Indemnity: $47.33
Available for First-Class Mail International, including postcards and Flat Rate Envelopes and Small Flat Rate Priced Boxes, and matter for the blind or other physically handicapped persons. Not applicable to M-bags.

Restricted Delivery (350) **Fee:** $4.55
Available for registered mail with a return receipt.
Endorsements: A remettre en main propre.

Return Receipt (340) **Fee:** $2.35
Available for registered mail and insured Priority Mail International parcels only.

Germany

Country Conditions for Mailing

Prohibitions (130)

Absinthe.
Arms and weapons.
Articles bearing political or religious notations on the address side.
Human remains.
Live plants and animals.
Melatonin.
Perishable infectious biological substances.
Playing cards, except in complete decks properly wrapped.
Pulverized coca beans.
Radioactive materials.

Restrictions

Importation of medicines requires special authorization by German authorities.

Observations

1. A parcel may be addressed to a street address or to a post office box. A local telephone number for the addressee should be provided when the item is addressed to a street address and must be provided when the item is addressed to a post office box.
2. For Priority Mail International parcels, an invoice, in duplicate, is required for all commercial shipments regardless of value and all personal shipments valued at $300 or more. The invoices must be affixed to the outside of the parcel or may be enclosed in PS Form 2976-E with the customs declaration.
3. Mailpieces delivered through international bulk mail services must be addressed with the correct postcode number or delivery zone number, if one exists. Without this number, the German postal administration will return such pieces to the sender or the country of origin due to insufficient addressing.
4. Import licenses or certificates are required for meat and meat products; pasta products; dairy products; egg and egg products; plant and plant products; tobacco products; and cigarette paper. Senders should ascertain before mailing whether the necessary documents are held by the addressee.
5. The customs treatment of gift parcels will be facilitated if the customs declaration is marked by the sender “Private Geschenksendung” (personal gift package).
6. Customs authorities require invoices with books valued at 26 euros or more (currently $35.20).
7. Germany will not accept any Express Mail International or Priority Mail International insured item valued at more than $500. Items valued at more than $500 will be returned to sender.

Customs Forms Required (123)

First-Class Mail International items and Priority Mail International Flat Rate Envelopes and Small Flat Rate Priced Boxes:
PS Form 2976 (see 123.61)
Priority Mail International parcels:
PS Form 2976-A inside 2976-E (envelope)

Global Express Guaranteed (210) Price Group 3

Refer to Notice 123, *Price List*, for the applicable retail, commercial base, or commercial plus price.
Weight Limit: 70 lbs.

Insurance (212.5)

Insured Amount not over	**Fee**	**Insured Amount** not over	**Fee**
$100	No Fee	For document reconstruction insurance or non-document insurance coverage above $800, add $1.00 per $100 or fraction thereof, up to a maximum of $2,499 per shipment.	
200	$1.00		
300	2.00		
400	3.00		
500	4.00		
600	5.00		
700	6.00		
800	7.00	$2,499 max.	$24.00

Value Limit (212.1)

The maximum value of a GXG shipment to this country is $2,499 or a lesser amount if limited by content or value.

Size Limits (211.22)

The surface area of the address side of the item to be mailed must be large enough to completely contain the Global Express Guaranteed Air Waybill/Shipping Invoice (shipping label), postage, endorsement, and any applicable markings. The shipping label is approximately 5.5 inches high and 9.5 inches long.
Maximum length: 46 inches
Maximum width: 35 inches
Maximum height: 46 inches
Maximum length and girth combined: 108 inches

General Conditions for Mailing

See Publication 141, *Global Express Guaranteed Service Guide,* for information about areas served in the destination country, allowable contents, packaging and labeling requirements, tracking and tracing, service standards, and other conditions for mailing.

Express Mail International (220) Price Group 16

Refer to Notice 123, *Price List*, for the applicable retail, commercial base, or commercial plus price.
Weight Limit: 66 lbs.

Express Mail International — Flat Rate Envelope and Flat Rate Boxes

The maximum weight for the Express Mail International Flat Rate Envelope and the Express Mail International Flat Rate Boxes is 20 pounds. Refer to Notice 123, *Price List*, for the applicable retail, commercial base, or commercial plus price.

Insurance (222.8):

Available for **Express Mail International merchandise shipments** only

Insured Amount not over	**Fee**
$100	No Fee
200	$0.85
500 max.	2.35

Articles Admitted	Required Customs Form/Endorsement
Any kind of written communications including legal documents, instruments, and manuscripts; computer data, including magnetic tapes, magnetic disks, punch cards, and recording tapes.	PS Form 2976, *Customs — CN 22 and Sender's Declaration.*
Merchandise samples without commercial value.	PS Form 2976-A, *Customs Declaration and Dispatch Note CP 72,* inside a PS Form 2976-E, *Customs Declaration Envelope CP 91.*
Merchandise and all articles subject to customs duty.	PS Form 2976-A, *Customs Declaration and Dispatch Note CP 72,* inside a PS Form 2976-E, *Customs Declaration Envelope CP 91.* An invoice, in duplicate, is required for all commercial shipments regardless of value and all personal shipments valued at $300 or more. The invoices must be either affixed to the outside of the parcel or enclosed in PS Form 2976-E with the customs declaration.

Size Limits (221.52)
Maximum length: 60 inches
Maximum length and girth combined: 108 inches

Notes:
1. An invoice, in duplicate, is required for all commercial shipments regardless of value and for all personal shipments valued at $300 or more. The invoices must be either affixed to the outside of the parcel or enclosed in PS Form 2976-E with the customs declaration.
2. Arms, weapons, and human remains are prohibited.
3. Coins; banknotes; currency notes, including paper money; securities of any kind payable to bearer; traveler's checks; platinum, gold, and silver; precious stones; jewelry; watches; and other valuable articles are prohibited in Express Mail International shipments to Germany.
4. An Express Mail International shipment may be addressed to a street address or to a post office box. A local telephone number for the addressee should be provided when the item is addressed to a street address and must be provided when the item is addressed to a post office box.

Reciprocal Service Name: There is no reciprocal service.

Country Code: DE

Areas Served: All

Priority Mail International (230) Price Group 16

Refer to Notice 123, *Price List*, for the applicable retail, commercial base, or commercial plus price.
Weight Limit: 70 lbs.

Note: *Ordinary Priority Mail International includes indemnity at no cost based on weight. (See 230.)*

Priority Mail International — Flat Rate
Flat Rate Envelopes or Small Flat Rate Priced Boxes: The maximum weight is 4 pounds. Refer to Notice 123, *Price List*, for the applicable retail, commercial base, or commercial plus price.

Flat Rate Boxes — Medium and Large: The maximum weight is 20 pounds, or the limit set by the individual country, whichever is less. Refer to Notice 123, *Price List*, for the retail, commercial base, or commercial plus price.

Insurance (232.92)
Available for **Priority Mail International merchandise parcels** only (see 323.72 for markings)

Insured Amount not over	Fee
$50	$2.45
100	3.60
200	4.75
300	5.90
400	7.05
500 max.	8.20

Size Limits (231.22)
Maximum length: 60 inches
Maximum length and girth combined: 108 inches

First-Class Mail International (240) Price Group 5
For the prices and maximum weights for letters, large envelopes (flats), packages (small packets), and postcards, see Notice 123, *Price List*.

Size Limits
Letters: See 241.212
Postcards: See 241.221
Large Envelopes (Flats): See 241.232
Packages (Small Packets): See 241.242 and 241.243

Airmail M-bags (260) — Direct Sack to One Addressee Price Group 5

Refer to Notice 123, *Price List*, for the applicable retail, commercial base, or commercial plus price.
Weight Limit: 66 lbs.

Matter for the Blind (270)
Free when sent as First-Class Mail International, including Priority Mail International Flat Rate Envelopes and Small Flat Rate Priced Boxes. Weight limit: 4 pounds.
Free when sent as Priority Mail International. Weight limit: 15 pounds.

Extra Services

Certificate of Mailing (313)

Individual Pieces	Fee
Individual article (PS Form 3817)	$1.15
Firm mailing books (PS Form 3877), per article listed (minimum 3)	0.44
Duplicate copy of PS Form 3817 or PS Form 3877 (per page)	1.15
Bulk Quantities	**Fee**
First 1,000 pieces (or fraction thereof)	$6.70
Each additional 1,000 pieces (or fraction thereof)	0.80
Duplicate copy of PS Form 3606	1.15

COD and Certified

NOT for International Mail

International Business Reply Service (382)

Fee: Envelopes up to 2 ounces $1.50; Cards $1.00

International Postal Money Order (371)

NOT Available

International Reply Coupons (381)

Fee: $2.20

Registered Mail (330)

Fee: $11.75

Maximum Indemnity: $47.33
Available for First-Class Mail International, including postcards and Flat Rate Envelopes and Small Flat Rate Priced Boxes, and matter for the blind or other physically handicapped persons. Not applicable to M-bags.

Restricted Delivery (350)

Fee: $4.55

Available for registered mail with a return receipt.
Endorsements: A remettre en main propre.
Elgenhandig.

Return Receipt (340)

Fee: $2.35

Available for registered mail and insured Priority Mail International parcels only.

Ghana

Country Conditions for Mailing

Prohibitions (130)
Arms and ammunition.
Perishable infectious biological substances.
Perishable noninfectious biological substances.
Radioactive materials.

Restrictions
Banknotes, treasury notes, currency notes, and coins may only be sent in registered First-Class Mail International shipments from one bank to another.
Manufactured and unmanufactured platinum, gold, and silver; precious stones; and jewelry may only be sent in insured Priority Mail International parcels.

Observations
None

Customs Forms Required (123)
First-Class Mail International items and Priority Mail International Flat Rate Envelopes and Small Flat Rate Priced Boxes:
PS Form 2976 (see 123.61)
Priority Mail International parcels:
PS Form 2976-A inside 2976-E (envelope)

Global Express Guaranteed (210) Price Group 4

Refer to Notice 123, *Price List*, for the applicable retail, commercial base, or commercial plus price.
Weight Limit: 70 lbs.

Insurance (212.5)

Insured Amount not over	Fee	Insured Amount not over	Fee
$100	No Fee	For document reconstruction insurance or non-document insurance coverage above $800, add $1.00 per $100 or fraction thereof, up to a maximum of $2,499 per shipment.	
200	$1.00		
300	2.00		
400	3.00		
500	4.00		
600	5.00		
700	6.00		
800	7.00	$2,499 max.	$24.00

Value Limit (212.1)
The maximum value of a GXG shipment to this country is $2,499 or a lesser amount if limited by content or value.

Size Limits (211.22)
The surface area of the address side of the item to be mailed must be large enough to completely contain the Global Express Guaranteed Air Waybill/Shipping Invoice (shipping label), postage, endorsement, and any applicable markings. The shipping label is approximately 5.5 inches high and 9.5 inches long.
Maximum length: 46 inches
Maximum width: 35 inches
Maximum height: 46 inches
Maximum length and girth combined: 108 inches

General Conditions for Mailing
See Publication 141, *Global Express Guaranteed Service Guide,* for information about areas served in the destination country, allowable contents, packaging and labeling requirements, tracking and tracing, service standards, and other conditions for mailing.

Express Mail International (220) Price Group 7

Refer to Notice 123, *Price List*, for the applicable retail, commercial base, or commercial plus price.
Weight Limit: 66 lbs.

Express Mail International — Flat Rate Envelope and Flat Rate Boxes
The maximum weight for the Express Mail International Flat Rate Envelope and the Express Mail International Flat Rate Boxes is 20 pounds. Refer to Notice 123, *Price List*, for the applicable retail, commercial base, or commercial plus price.

Insurance (222.8)
Available for **Express Mail International merchandise shipments** only

Insured Amount not over	Fee	Insured Amount not over	Fee
$100	No Fee	For insurance coverage above $2,000, add $1.50 for each $500 or fraction thereof, up to a maximum of $5,000 per shipment.	
200	$0.85		
500	2.35		
1,000	3.85		
1,500	5.35		
2,000	6.85	$5,000 max.	$15.85

Articles Admitted	Required Customs Form/Endorsement
Correspondence, business papers, computer data, and advertising material.	PS Form 2976, *Customs — CN 22 and Sender's Declaration.* Endorse item clearly next to mailing label as BUSINESS PAPERS.
Merchandise samples without commercial value.	PS Form 2976, *Customs — CN 22 and Sender's Declaration.*
Merchandise and all articles subject to customs duty.	PS Form 2976-A, *Customs Declaration and Dispatch Note CP 72,* inside a PS Form 2976-E, *Customs Declaration Envelope CP 91.* A commercial invoice must be enclosed in each item.

Size Limits (221.52)
Maximum length: 36 inches
Maximum length and girth combined: 79 inches

Note:
Coins; banknotes; currency notes, including paper money; securities of any kind payable to bearer; traveler's checks; platinum, gold, and silver; precious stones; jewelry; watches; and other valuable articles are prohibited in Express Mail International shipments to Ghana.

Reciprocal Service Name: EMS Ghana

Country Code: GH

Areas Served: All

Priority Mail International (230) Price Group 7

Refer to Notice 123, *Price List*, for the applicable retail, commercial base, or commercial plus price.
Weight Limit: 66 lbs.

Note: *Ordinary Priority Mail International includes indemnity at no cost based on weight. (See 230.)*

Priority Mail International — Flat Rate

Flat Rate Envelopes or Small Flat Rate Priced Boxes: The maximum weight is 4 pounds. Refer to Notice 123, *Price List*, for the applicable retail, commercial base, or commercial plus price.

Flat Rate Boxes — Medium and Large: The maximum weight is 20 pounds, or the limit set by the individual country, whichever is less. Refer to Notice 123, *Price List*, for the retail, commercial base, or commercial plus price.

Insurance (232.92) NOT Available

Size Limits (231.22)

Maximum length: 42 inches
Maximum length and girth combined: 79 inches

First-Class Mail International (240) Price Group 7

For the prices and maximum weights for letters, large envelopes (flats), packages (small packets), and postcards, see Notice 123, *Price List*.

Size Limits

Letters: See 241.212
Postcards: See 241.221
Large Envelopes (Flats): See 241.232
Packages (Small Packets): See 241.242 and 241.243

Airmail M-bags (260) — Direct Sack to One Addressee Price Group 7

Refer to Notice 123, *Price List*, for the applicable retail, commercial base, or commercial plus price.
Weight Limit: 66 lbs.

Matter for the Blind (270)

Free when sent as First-Class Mail International, including Priority Mail International Flat Rate Envelopes and Small Flat Rate Priced Boxes. Weight limit: 4 pounds.
Free when sent as Priority Mail International. Weight limit: 15 pounds.

Extra Services

Certificate of Mailing (313)

Individual Pieces	Fee
Individual article (PS Form 3817)	$1.15
Firm mailing books (PS Form 3877), per article listed (minimum 3)	0.44
Duplicate copy of PS Form 3817 or PS Form 3877 (per page)	1.15
Bulk Quantities	**Fee**
First 1,000 pieces (or fraction thereof)	$6.70
Each additional 1,000 pieces (or fraction thereof)	0.80
Duplicate copy of PS Form 3606	1.15

COD and Certified **NOT** for International Mail

International Business Reply Service (382)

Fee: Envelopes up to 2 ounces $1.50; Cards $1.00

International Postal Money Order (371)

NOT Available

International Reply Coupons (381) **Fee:** $2.20

Registered Mail (330) **Fee:** $11.75

Maximum Indemnity: $47.33
Available for First-Class Mail International, including postcards and Flat Rate Envelopes and Small Flat Rate Priced Boxes, and matter for the blind or other physically handicapped persons. Not applicable to M-bags.

Restricted Delivery (350) NOT Available

Return Receipt (340) **Fee:** $2.35

Available for registered mail only.

Gibraltar

Country Conditions for Mailing

Prohibitions (130)
Arms and weapons.
Human remains.
Lighters containing butane gas and refills therefor.
Live plants and animals.
Perishable infectious biological substances.
Perishable noninfectious biological substances.
Radioactive materials.

Restrictions
None

Observations
1. A parcel may be addressed to a street address or to a post office box. A local telephone number for the addressee should be provided when the item is addressed to a street address and must be provided when the item is addressed to a post office box.
2. For Priority Mail International parcels, an invoice, in duplicate, is required for all commercial shipments regardless of value and all personal shipments valued at $300 or more. The invoices must be affixed to the outside of the parcel or may be enclosed in PS Form 2976-E with the customs declaration.

Customs Forms Required (123)
First-Class Mail International items and Priority Mail International Flat Rate Envelopes and Small Flat Rate Priced Boxes:
PS Form 2976 (see 123.61)
Priority Mail International parcels:
PS Form 2976-A inside 2976-E (envelope)

Global Express Guaranteed (210) Price Group 4

Refer to Notice 123, *Price List*, for the applicable retail, commercial base, or commercial plus price.
Weight Limit: 70 lbs.

Insurance (212.5)

Insured Amount not over	Fee	Insured Amount not over	Fee
$100	No Fee	For document reconstruction insurance or non-document insurance coverage above $800, add $1.00 per $100 or fraction thereof, up to a maximum of $2,499 per shipment.	
200	$1.00		
300	2.00		
400	3.00		
500	4.00		
600	5.00		
700	6.00		
800	7.00	$2,499 max.	$24.00

Value Limit (212.1)
The maximum value of a GXG shipment to this country is $2,499 or a lesser amount if limited by content or value.

Size Limits (211.22)
The surface area of the address side of the item to be mailed must be large enough to completely contain the Global Express Guaranteed Air Waybill/Shipping Invoice (shipping label), postage, endorsement, and any applicable markings. The shipping label is approximately 5.5 inches high and 9.5 inches long.
Maximum length: 46 inches
Maximum width: 35 inches
Maximum height: 46 inches
Maximum length and girth combined: 108 inches

General Conditions for Mailing
See Publication 141, *Global Express Guaranteed Service Guide,* for information about areas served in the destination country, allowable contents, packaging and labeling requirements, tracking and tracing, service standards, and other conditions for mailing.

Express Mail International (220)
Not Available

Priority Mail International (230) Price Group 5

Refer to Notice 123, *Price List*, for the applicable retail, commercial base, or commercial plus price.
Weight Limit: 44 lbs.

Note: *Ordinary Priority Mail International includes indemnity at no cost based on weight. (See 230.)*

Priority Mail International — Flat Rate
Flat Rate Envelopes or Small Flat Rate Priced Boxes: The maximum weight is 4 pounds. Refer to Notice 123, *Price List*, for the applicable retail, commercial base, or commercial plus price.

Flat Rate Boxes — Medium and Large: The maximum weight is 20 pounds, or the limit set by the individual country, whichever is less. Refer to Notice 123, *Price List*, for the retail, commercial base, or commercial plus price.

Insurance (232.92) NOT Available

Size Limits (231.22)
Maximum length: 60 inches
Maximum length and girth combined: 108 inches

First-Class Mail International (240) Price Group 5
For the prices and maximum weights for letters, large envelopes (flats), packages (small packets), and postcards, see Notice 123, *Price List*.

Size Limits
Letters: See 241.212
Postcards: See 241.221
Large Envelopes (Flats): See 241.232
Packages (Small Packets): See 241.242 and 241.243

Airmail M-bags (260) — Direct Sack to One Addressee Price Group 5

Refer to Notice 123, *Price List*, for the applicable retail, commercial base, or commercial plus price.
Weight Limit: 66 lbs.

Matter for the Blind (270)
Free when sent as First-Class Mail International, including Priority Mail International Flat Rate Envelopes and Small Flat Rate Priced Boxes. Weight limit: 4 pounds.
Free when sent as Priority Mail International. Weight limit: 15 pounds.

Extra Services

Certificate of Mailing (313)

Individual Pieces	Fee
Individual article (PS Form 3817)	$1.15
Firm mailing books (PS Form 3877), per article listed (minimum 3)	0.44
Duplicate copy of PS Form 3817 or PS Form 3877 (per page)	1.15
Bulk Quantities	**Fee**
First 1,000 pieces (or fraction thereof)	$6.70
Each additional 1,000 pieces (or fraction thereof)	0.80
Duplicate copy of PS Form 3606	1.15

COD and Certified

NOT for International Mail

International Business Reply Service (382)

Fee: Envelopes up to 2 ounces $1.50; Cards $1.00

International Postal Money Order (371)

NOT Available

International Reply Coupons (381)

Fee: $2.20

Registered Mail (330)

Fee: $11.75

Maximum Indemnity: $47.33
Available for First-Class Mail International, including postcards and Flat Rate Envelopes and Small Flat Rate Priced Boxes, and matter for the blind or other physically handicapped persons. Not applicable to M-bags.

Restricted Delivery (350)

Fee: $4.55

Available for registered mail with a return receipt.
Endorsements: A remettre en main propre.

Return Receipt (340)

Fee: $2.35

Available for registered mail only.

Great Britain and Northern Ireland
(Includes England, Scotland, Wales, Northern Ireland, Guernsey, Jersey, Alderney, Sark, and the Isle of Man)

Country Conditions for Mailing

Prohibitions (130)

Any postal item containing enclosures addressed to different persons at different addresses.
Arms and parts of arms, except as noted under Observation #5 below.
Articles, goods infringing British trademarks or copyright laws.
Bullion, coins, banknotes, securities, or negotiable financial instruments of any kind.
Cards decorated with mica or ground glass or similar materials unless they are placed in envelopes.
Citizens Band Radios, walkie-talkies, microbugs, and radio microphones that are capable of transmitting on any frequency between 26.1 and 29.7 megacycles per second and 88 to 108 Mhz per second.
Goods made in foreign prisons, except those imported for a non-commercial purpose or of a kind not manufactured in the UK.
Horror comics and matrices.
Jewelry, precious metals, precious or semi-precious stones.
Obscene articles, prints, paintings, cards, films, videotapes, etc.
Perishable infectious biological substances.
Seal skins except those from an accepted source.
Switchblade knives.

Restrictions

Foods or beverages to which any preservative or other substance has been added must comply with the British regulations for importation.
Live bees.
Live queen bees must be accompanied by an import license issued by a UK Government Agricultural Department and a health certificate issued by the appropriate Government Department of the country of origin stating that the bees are free of disease.
Meat, meat products, and animal products including dry sausage and dried milk require import license issued by appropriate UK Agricultural Department.
Plants and parts of plants require import permit issued by the appropriate Agricultural Department in UK.

Observations

1. The following is a list of the names of the counties and city names in Northern Ireland. The County names are in capital letters. The geographic identifiers should be used in addressing mail to Northern Ireland:

ANTRIM:	**DOWN:**	**LONDONDERRY:**
Antrim	Banbridge	Coleraine
Ballymena	Bangor	Kilrea
Belfast	Downpatrick	Limavady
Carrickfergus	Kilkeel	Londonderry
Larne	Newcastle	Magherafelt
Lisburn	Newry	Portstewart
Portrush	Newtownards	**TYRONE:**
Toomebridge	**FERMANAGH:**	Cookstown
Whitehead	Enniskillen	Dugannon
ARMAGH:		Moy
Armagh		Omagh
Lurgan		Strabane
Portsdown		

2. Many types of merchandise, unless sent as unsolicited gifts, require import licenses that the addressees must obtain from the British Board of Trade. Before mailing commercial shipments, senders should be assured that the addressees can obtain licenses if needed.
3. All goods sent to the UK are liable to customs duty and Value Added Tax on importation whether or not the package is marked as a "gift." Packages are admitted free of customs charges, however, if they meet the following conditions:
   a. Gift packages of small value provided they do not contain any tobacco goods, spirits or wine;
   b. Gift packages containing only well-worn clothing (excluding garments of high value), limited quantities of foodstuffs (other than caviar), soap or consumable medical supplies.
4. Postal packages without a customs declaration that contain goods liable to customs duty or control may be seized by the customs authorities.
5. Firearms that are intended for sporting purposes are mailable to Great Britain, provided the prospective addressee has obtained the required import license.
6. Great Britain limits the weight of M-bags to 20 kg. (44 lbs.).

Customs Forms Required (123)

First-Class Mail International items and Priority Mail International Flat Rate Envelopes and Small Flat Rate Priced Boxes:
PS Form 2976 (see 123.61)
Priority Mail International parcels:
PS Form 2976-A inside 2976-E (envelope)

Global Express Guaranteed (210) Price Group 3

Refer to Notice 123, *Price List*, for the applicable retail, commercial base, or commercial plus price.
Weight Limit: 70 lbs.

Insurance (212.5)

Insured Amount not over	**Fee**	**Insured Amount** not over	**Fee**
$100	No Fee	For document reconstruction insurance or non-document insurance coverage above $800, add $1.00 per $100 or fraction thereof, up to a maximum of $2,499 per shipment.	
200	$1.00		
300	2.00		
400	3.00		
500	4.00		
600	5.00		
700	6.00		
800	7.00	$2,499 max.	$24.00

Value Limit (212.1)

The maximum value of a GXG shipment to this country is $2,499 or a lesser amount if limited by content or value.

Size Limits (211.22)

The surface area of the address side of the item to be mailed must be large enough to completely contain the Global Express Guaranteed Air Waybill/Shipping Invoice (shipping label), postage, endorsement, and any applicable markings. The shipping label is approximately 5.5 inches high and 9.5 inches long.
Maximum length: 46 inches
Maximum width: 35 inches
Maximum height: 46 inches
Maximum length and girth combined: 108 inches

General Conditions for Mailing

See Publication 141, *Global Express Guaranteed Service Guide,* for information about areas served in the destination country, allowable contents, packaging and labeling requirements, tracking and tracing, service standards, and other conditions for mailing.

Express Mail International (220) Price Group 11

Refer to Notice 123, *Price List*, for the applicable retail, commercial base, or commercial plus price.
Weight Limit: 66 lbs.

Express Mail International — Flat Rate Envelope and Flat Rate Boxes

The maximum weight for the Express Mail International Flat Rate Envelope and the Express Mail International Flat Rate Boxes is 20 pounds. Refer to Notice 123, *Price List*, for the applicable retail, commercial base, or commercial plus price.

Insurance (222.8)

Available for **Express Mail International merchandise shipments** only

Insured Amount not over	Fee
$100	No Fee
200	$0.85
500	2.35
650 max.	3.85

Articles Admitted	Required Customs Form/Endorsement
Business correspondence, commercial papers, and documents.	No form required. Endorse item clearly next to mailing label as BUSINESS PAPERS.
Merchandise samples without commercial value.	PS Form 2976, *Customs — CN 22 and Sender's Declaration.*
Merchandise and all articles subject to customs duty.	PS Form 2976-A, *Customs Declaration and Dispatch Note CP 72,* inside a PS Form 2976-E, *Customs Declaration Envelope CP 91.*

Size Limits (221.52)

Maximum length: 36 inches
Maximum length and girth combined: 79 inches

1. Coins; banknotes; currency notes, including paper money; securities of any kind payable to bearer; traveler's checks; platinum, gold, and silver; precious stones; jewelry; watches; and other valuable articles are prohibited in Express Mail International shipments to Great Britain and Northern Ireland.
2. Express Mail International With Guarantee service — which offers a date-certain, postage-refund guarantee — is available to Great Britain and Northern Ireland.

Reciprocal Service Name: Datapost

Country Code: GB

Areas Served:

All points in England, Scotland, Wales, Northern Ireland, Guernsey, Jersey, Alderney, Sark, and the Isle of Man.

Priority Mail International (230) Price Group 11

Refer to Notice 123, *Price List*, for the applicable retail, commercial base, or commercial plus price.
Weight Limit: 66 lbs.

Note: *Ordinary Priority Mail International includes indemnity at no cost based on weight. (See 230.)*

Priority Mail International — Flat Rate

Flat Rate Envelopes or Small Flat Rate Priced Boxes: The maximum weight is 4 pounds. Refer to Notice 123, *Price List*, for the applicable retail, commercial base, or commercial plus price.

Flat Rate Boxes — Medium and Large: The maximum weight is 20 pounds, or the limit set by the individual country, whichever is less. Refer to Notice 123, *Price List*, for the retail, commercial base, or commercial plus price.

Insurance (232.92) NOT Available

Size Limits (231.22)

Maximum length: 60 inches
Maximum length and girth combined: 108 inches

First-Class Mail International (240) Price Group 5

For the prices and maximum weights for letters, large envelopes (flats), packages (small packets), and postcards, see Notice 123, *Price List*.

Size Limits

Letters: See 241.212
Postcards: See 241.221
Large Envelopes (Flats): See 241.232
Packages (Small Packets): See 241.242 and 241.243

Airmail M-bags (260) — Direct Sack to One Addressee Price Group 5

Refer to Notice 123, *Price List*, for the applicable retail, commercial base, or commercial plus price.
Weight Limit: 44 lbs.

Matter for the Blind (270)

Free when sent as First-Class Mail International, including Priority Mail International Flat Rate Envelopes and Small Flat Rate Priced Boxes. Weight limit: 4 pounds.
Free when sent as Priority Mail International. Weight limit: 15 pounds.

Extra Services

Certificate of Mailing (313)

Individual Pieces	Fee
Individual article (PS Form 3817)	$1.15
Firm mailing books (PS Form 3877), per article listed (minimum 3)	0.44
Duplicate copy of PS Form 3817 or PS Form 3877 (per page)	1.15
Bulk Quantities	**Fee**
First 1,000 pieces (or fraction thereof)	$6.70
Each additional 1,000 pieces (or fraction thereof)	0.80
Duplicate copy of PS Form 3606	1.15

COD and Certified

NOT for International Mail

International Business Reply Service (382)

Fee: Envelopes up to 2 ounces $1.50; Cards $1.00

International Postal Money Order (371)

NOT Available

International Reply Coupons (381)

Fee: $2.20

Registered Mail (330)

Fee: $11.75

Maximum Indemnity: $47.33
Available for First-Class Mail International, including postcards and Flat Rate Envelopes and Small Flat Rate Priced Boxes, and matter for the blind or other physically handicapped persons. Not applicable to M-bags.

Restricted Delivery (350)

NOT Available

Return Receipt (340)

Fee: $2.35

Available for registered mail and insured Priority Mail International parcels only.

Greece

Country Conditions for Mailing

Prohibitions (130)

Aluminum foil for tobacco manufacturing.
Arms and weapons.
Coins; traveler's checks; platinum, gold or silver, manufactured or not; precious stones; jewelry; and other valuable articles, except banknotes, currency notes (paper money), securities payable to bearer may be sent in registered First-Class Mail International shipments.
Firearms, swords, and any articles containing them.
Fresh meat, preserved meat, rawhides, wool, and other animal products must be accompanied by a certificate showing the place of origin and stating that it is free of disease.
Human remains.
Live plants and animals.
Perishable infectious biological substances.
Perishable noninfectious biological substances.
Playing cards; saccharine; tobacco, cigars, cigarettes; and cigarette papers.
Radioactive materials.

Restrictions

Banknotes, currency notes; and securities payable to bearer may only be sent in registered First-Class Mail International shipments.
Cans of condensed milk require a label in the Greek language indicating the directions for its use.
Hunting arms and other commercial arms require special permission from the Greek authorities.
Medicines must be packaged in the manufacturer's container bearing his or her distinctive marks. Since admissible medicines must be licensed or specially authorized by the Greek authorities for importation, mailers should ascertain in advance whether the addressees will be able to take delivery.
Used clothing, bedding, and rags must be accompanied by a certificate of origin stating that they have been disinfected.

Observations

1. A parcel may be addressed to a street address or to a post office box. A local telephone number for the addressee should be provided when the item is addressed to a street address and must be provided when the item is addressed to a post office box.
2. For Priority Mail International parcels, an invoice, in duplicate, is required for all commercial shipments regardless of value and all personal shipments valued at $300 or more. The invoices must be affixed to the outside of the parcel or may be enclosed in PS Form 2976-E with the customs declaration.
3. Many types of merchandise are subject to import licenses and are not delivered without permission of the Greek authorities. Senders should ascertain from the addressees in advance of mailing, that their shipments will be delivered.

Customs Forms Required (123)

First-Class Mail International items and Priority Mail International Flat Rate Envelopes and Small Flat Rate Priced Boxes:
PS Form 2976 (see 123.61)
Priority Mail International parcels:
PS Form 2976-A inside 2976-E (envelope)

Global Express Guaranteed (210) Price Group 5

Refer to Notice 123, *Price List*, for the applicable retail, commercial base, or commercial plus price.
Weight Limit: 70 lbs.

Insurance (212.5)

Insured Amount not over	Fee	Insured Amount not over	Fee
$100	No Fee	For document reconstruction insurance or non-document insurance coverage above $800, add $1.00 per $100 or fraction thereof, up to a maximum of $2,499 per shipment.	
200	$1.00		
300	2.00		
400	3.00		
500	4.00		
600	5.00		
700	6.00		
800	7.00	$2,499 max.	$24.00

Value Limit (212.1)

The maximum value of a GXG shipment to this country is $2,499 or a lesser amount if limited by content or value.

Size Limits (211.22)

The surface area of the address side of the item to be mailed must be large enough to completely contain the Global Express Guaranteed Air Waybill/Shipping Invoice (shipping label), postage, endorsement, and any applicable markings. The shipping label is approximately 5.5 inches high and 9.5 inches long.
Maximum length: 46 inches
Maximum width: 35 inches
Maximum height: 46 inches
Maximum length and girth combined: 108 inches

General Conditions for Mailing

See Publication 141, *Global Express Guaranteed Service Guide,* for information about areas served in the destination country, allowable contents, packaging and labeling requirements, tracking and tracing, service standards, and other conditions for mailing.

Express Mail International (220) Price Group 5

Refer to Notice 123, *Price List*, for the applicable retail, commercial base, or commercial plus price.
Weight Limit: 66 lbs.

Express Mail International — Flat Rate Envelope and Flat Rate Boxes

The maximum weight for the Express Mail International Flat Rate Envelope and the Express Mail International Flat Rate Boxes is 20 pounds. Refer to Notice 123, *Price List*, for the applicable retail, commercial base, or commercial plus price.

Insurance (222.8)

Available for **Express Mail International merchandise shipments** only

Insured Amount not over	Fee
$100	No Fee
200	$0.85
500	2.35
650 max.	3.85

Articles Admitted	Required Customs Form/Endorsement
Correspondence, business papers, and computer data.	PS Form 2976, *Customs — CN 22 and Sender's Declaration.*
Samples of merchandise without commercial value.	PS Form 2976, *Customs — CN 22 and Sender's Declaration.*
Merchandise and all articles subject to customs duty.	PS Form 2976-A, *Customs Declaration and Dispatch Note CP 72,* inside a PS Form 2976-E, *Customs Declaration Envelope CP 91.* An invoice, in duplicate, is required for all commercial shipments regardless of value and all personal shipments valued at $300 or more. The invoices must be either affixed to the outside of the parcel or enclosed in PS Form 2976-E with the customs declaration.

Size Limits (221.52)
Maximum length: 60 inches
Maximum length and girth combined: 108 inches

Notes:
1. An invoice, in duplicate, is required for all commercial shipments regardless of value and for all personal shipments valued at $300 or more. The invoices must be either affixed to the outside of the parcel or enclosed in PS Form 2976-E with the customs declaration.
2. Arms, weapons, and human remains are prohibited.
3. Coins; banknotes; currency notes, including paper money; securities of any kind payable to bearer; traveler's checks; platinum, gold, and silver; precious stones; jewelry; watches; and other valuable articles are prohibited in Express Mail International shipments to Greece.
4. An Express Mail International shipment may be addressed to a street address or to a post office box. A local telephone number for the addressee should be provided when the item is addressed to a street address and must be provided when the item is addressed to a post office box.

Reciprocal Service Name: Express Mail Service

Country Code: GR

Areas Served: All

Priority Mail International (230) Price Group 5

Refer to Notice 123, *Price List*, for the applicable retail, commercial base, or commercial plus price.
Weight Limit: 44 lbs.

Note: *Ordinary Priority Mail International includes indemnity at no cost based on weight. (See 230.)*

Priority Mail International — Flat Rate
Flat Rate Envelopes or Small Flat Rate Priced Boxes: The maximum weight is 4 pounds. Refer to Notice 123, *Price List*, for the applicable retail, commercial base, or commercial plus price.

Flat Rate Boxes — Medium and Large: The maximum weight is 20 pounds, or the limit set by the individual country, whichever is less. Refer to Notice 123, *Price List*, for the retail, commercial base, or commercial plus price.

Insurance (232.92)
Available for **Priority Mail International merchandise parcels** only (see 323.72 for markings)

Insured Amount not over	Fee
$50	$2.45
100	3.60
200	4.75
300	5.90
400	7.05
500	8.20
600	9.35
650 max.	10.50

Size Limits (231.22)
Maximum length: 60 inches
Maximum length and girth combined: 108 inches

First-Class Mail International (240) Price Group 5
For the prices and maximum weights for letters, large envelopes (flats), packages (small packets), and postcards, see Notice 123, *Price List*.

Size Limits
Letters: See 241.212
Postcards: See 241.221
Large Envelopes (Flats): See 241.232
Packages (Small Packets): See 241.242 and 241.243

Airmail M-bags (260) — Direct Sack to One Addressee Price Group 5

Refer to Notice 123, *Price List*, for the applicable retail, commercial base, or commercial plus price.
Weight Limit: 66 lbs.

Matter for the Blind (270)
Free when sent as First-Class Mail International, including Priority Mail International Flat Rate Envelopes and Small Flat Rate Priced Boxes. Weight limit: 4 pounds.
Free when sent as Priority Mail International. Weight limit: 15 pounds.

Extra Services

Certificate of Mailing (313)

Individual Pieces	Fee
Individual article (PS Form 3817)	$1.15
Firm mailing books (PS Form 3877), per article listed (minimum 3)	0.44
Duplicate copy of PS Form 3817 or PS Form 3877 (per page)	1.15
Bulk Quantities	**Fee**
First 1,000 pieces (or fraction thereof)	$6.70
Each additional 1,000 pieces (or fraction thereof)	0.80
Duplicate copy of PS Form 3606	1.15

COD and Certified

NOT for International Mail

International Business Reply Service (382)

Fee: Envelopes up to 2 ounces $1.50; Cards $1.00

International Postal Money Order (371)

NOT Available

International Reply Coupons (381)

Fee: $2.20

Registered Mail (330)

Fee: $11.75

Maximum Indemnity: $47.33
Available for First-Class Mail International, including postcards and Flat Rate Envelopes and Small Flat Rate Priced Boxes, and matter for the blind or other physically handicapped persons. Not applicable to M-bags.

Restricted Delivery (350)

NOT Available

Return Receipt (340)

Fee: $2.35

Available for registered mail and insured Priority Mail International parcels only.

Greenland

Country Conditions for Mailing

Prohibitions (130)
Radioactive materials.
Same as for Denmark.

Restrictions
Same as for Denmark.

Observations
Shipments containing items subject to ad valorem duty require an invoice, which should be sent to the addressee in advance.

Customs Forms Required (123)
First-Class Mail International items and Priority Mail International Flat Rate Envelopes and Small Flat Rate Priced Boxes:
PS Form 2976 (see 123.61)
Priority Mail International parcels:
PS Form 2976-A inside 2976-E (envelope)

Global Express Guaranteed (210) Price Group 5

Refer to Notice 123, *Price List*, for the applicable retail, commercial base, or commercial plus price.
Weight Limit: 70 lbs.

Insurance (212.5)

Insured Amount not over	Fee	Insured Amount not over	Fee
$100	No Fee	For document reconstruction insurance or non-document insurance coverage above $800, add $1.00 per $100 or fraction thereof, up to a maximum of $2,499 per shipment.	
200	$1.00		
300	2.00		
400	3.00		
500	4.00		
600	5.00		
700	6.00		
800	7.00	$2,499 max.	$24.00

Value Limit (212.1)
The maximum value of a GXG shipment to this country is $2,499 or a lesser amount if limited by content or value.

Size Limits (211.22)
The surface area of the address side of the item to be mailed must be large enough to completely contain the Global Express Guaranteed Air Waybill/Shipping Invoice (shipping label), postage, endorsement, and any applicable markings. The shipping label is approximately 5.5 inches high and 9.5 inches long.
Maximum length: 46 inches
Maximum width: 35 inches
Maximum height: 46 inches
Maximum length and girth combined: 108 inches

General Conditions for Mailing
See Publication 141, *Global Express Guaranteed Service Guide,* for information about areas served in the destination country, allowable contents, packaging and labeling requirements, tracking and tracing, service standards, and other conditions for mailing.

Express Mail International (220)
Not Available

Priority Mail International (230) Price Group 5

Refer to Notice 123, *Price List*, for the applicable retail, commercial base, or commercial plus price.
Weight Limit: 66 lbs.

Note: *Ordinary Priority Mail International includes indemnity at no cost based on weight. (See 230.)*

Priority Mail International — Flat Rate
Flat Rate Envelopes or Small Flat Rate Priced Boxes: The maximum weight is 4 pounds. Refer to Notice 123, *Price List*, for the applicable retail, commercial base, or commercial plus price.

Flat Rate Boxes — Medium and Large: The maximum weight is 20 pounds, or the limit set by the individual country, whichever is less. Refer to Notice 123, *Price List*, for the retail, commercial base, or commercial plus price.

Insurance (232.92)
Available for **Priority Mail International merchandise parcels** only (see 323.72 for markings)

Insured Amount not over	Fee	Insured Amount not over	Fee
$50	$2.45	Add $1.15 for each additional $100 or fraction of insurance coverage.	
100	3.60		
200	4.75		
300	5.90		
400	7.05		
500	8.20	$5,000 max.	$59.95

Size Limits (231.22)
Maximum length: 42 inches
Maximum length and girth combined: 79 inches

First-Class Mail International (240) Price Group 5
For the prices and maximum weights for letters, large envelopes (flats), packages (small packets), and postcards, see Notice 123, *Price List*.

Size Limits
Letters: See 241.212
Postcards: See 241.221
Large Envelopes (Flats): See 241.232
Packages (Small Packets): See 241.242 and 241.243

Airmail M-bags (260) — Direct Sack to One Addressee Price Group 5

Refer to Notice 123, *Price List*, for the applicable retail, commercial base, or commercial plus price.
Weight Limit: 66 lbs.

Matter for the Blind (270)
Free when sent as First-Class Mail International, including Priority Mail International Flat Rate Envelopes and Small Flat Rate Priced Boxes. Weight limit: 4 pounds.
Free when sent as Priority Mail International. Weight limit: 15 pounds.

Extra Services

Certificate of Mailing (313)

Individual Pieces	Fee
Individual article (PS Form 3817)	$1.15
Firm mailing books (PS Form 3877), per article listed (minimum 3)	0.44
Duplicate copy of PS Form 3817 or PS Form 3877 (per page)	1.15
Bulk Quantities	**Fee**
First 1,000 pieces (or fraction thereof)	$6.70
Each additional 1,000 pieces (or fraction thereof)	0.80
Duplicate copy of PS Form 3606	1.15

COD and Certified

NOT for International Mail

International Business Reply Service (382)

Fee: Envelopes up to 2 ounces $1.50; Cards $1.00

International Postal Money Order (371)

NOT Available

International Reply Coupons (381)

Fee: $2.20

Registered Mail (330)

Fee: $11.75

Maximum Indemnity: $47.33
Available for First-Class Mail International, including postcards and Flat Rate Envelopes and Small Flat Rate Priced Boxes, and matter for the blind or other physically handicapped persons. Not applicable to M-bags.

Restricted Delivery (350)

Fee: $4.55

Available for registered mail with a return receipt.
Endorsements: A remettre en main propre.

Return Receipt (340)

Fee: $2.35

Available for registered mail and insured Priority Mail International parcels only.

Grenada

Country Conditions for Mailing

Prohibitions (130)
Ammunition, firing-caps, and charged metal cartridges.
Coins.

Restrictions
No list furnished.

Observations
None

Customs Forms Required (123)
First-Class Mail International items and Priority Mail International Flat Rate Envelopes and Small Flat Rate Priced Boxes:
PS Form 2976 (see 123.61)
Priority Mail International parcels:
PS Form 2976-A inside 2976-E (envelope)

Global Express Guaranteed (210) Price Group 7

Refer to Notice 123, *Price List*, for the applicable retail, commercial base, or commercial plus price.
Weight Limit: 70 lbs.

Insurance (212.5)

Insured Amount not over	Fee	Insured Amount not over	Fee
$100	No Fee	For document reconstruction insurance or non-document insurance coverage above $800, add $1.00 per $100 or fraction thereof, up to a maximum of $2,499 per shipment.	
200	$1.00		
300	2.00		
400	3.00		
500	4.00		
600	5.00		
700	6.00		
800	7.00	$2,499 max.	$24.00

Value Limit (212.1)
The maximum value of a GXG shipment to this country is $2,499 or a lesser amount if limited by content or value.

Size Limits (211.22)
The surface area of the address side of the item to be mailed must be large enough to completely contain the Global Express Guaranteed Air Waybill/Shipping Invoice (shipping label), postage, endorsement, and any applicable markings. The shipping label is approximately 5.5 inches high and 9.5 inches long.
Maximum length: 46 inches
Maximum width: 35 inches
Maximum height: 46 inches
Maximum length and girth combined: 108 inches

General Conditions for Mailing
See Publication 141, *Global Express Guaranteed Service Guide,* for information about areas served in the destination country, allowable contents, packaging and labeling requirements, tracking and tracing, service standards, and other conditions for mailing.

Express Mail International (220) Price Group 9

Refer to Notice 123, *Price List*, for the applicable retail, commercial base, or commercial plus price.
Weight Limit: 66 lbs.

Express Mail International — Flat Rate Envelope and Flat Rate Boxes
The maximum weight for the Express Mail International Flat Rate Envelope and the Express Mail International Flat Rate Boxes is 20 pounds. Refer to Notice 123, *Price List*, for the applicable retail, commercial base, or commercial plus price.

Insurance (222.8)
Available for **Express Mail International merchandise shipments** only

Insured Amount not over	Fee	Insured Amount not over	Fee
$100	No Fee	For insurance coverage above $2,000, add $1.50 for each $500 or fraction thereof, up to a maximum of $5,000 per shipment.	
200	$0.85		
500	2.35		
1,000	3.85		
1,500	5.35		
2,000	6.85	$5,000 max.	$15.85

Articles Admitted	Required Customs Form/Endorsement
Correspondence and business papers.	PS Form 2976, *Customs — CN 22 and Sender's Declaration.* Endorse item clearly next to mailing label as BUSINESS PAPERS.
Merchandise samples without commercial value and not subject to customs duty.	PS Form 2976, *Customs — CN 22 and Sender's Declaration.*
Merchandise and all articles subject to customs duty.	PS Form 2976-A, *Customs Declaration and Dispatch Note CP 72,* inside a PS Form 2976-E, *Customs Declaration Envelope CP 91.* Include a commercial invoice in each item.

Size Limits (221.52)
Maximum length: 36 inches
Maximum length and girth combined: 79 inches

Note:
Coins; banknotes; currency notes, including paper money; securities of any kind payable to bearer; traveler's checks; platinum, gold, and silver; precious stones; jewelry; watches; and other valuable articles are prohibited in Express Mail International shipments to Grenada. All items prohibited in regular international mail are also prohibited in Express Mail International to Grenada.

Reciprocal Service Name: EMS

Country Code: GD

Areas Served: All

Priority Mail International (230) Price Group 9

Refer to Notice 123, *Price List*, for the applicable retail, commercial base, or commercial plus price.
Weight Limit: 44 lbs.

Note: *Ordinary Priority Mail International includes indemnity at no cost based on weight. (See 230.)*

Priority Mail International — Flat Rate

Flat Rate Envelopes or Small Flat Rate Priced Boxes: The maximum weight is 4 pounds. Refer to Notice 123, *Price List*, for the applicable retail, commercial base, or commercial plus price.

Flat Rate Boxes — Medium and Large: The maximum weight is 20 pounds, or the limit set by the individual country, whichever is less. Refer to Notice 123, *Price List*, for the retail, commercial base, or commercial plus price.

Insurance (232.92)

Available for **Priority Mail International merchandise parcels** only (see 323.72 for markings)

Insured Amount not over	Fee
$50	$2.45
100	3.60
200	4.75
300	5.90
350 max.	7.05

Size Limits (231.22)

Maximum length: 42 inches
Maximum length and girth combined: 79 inches

First-Class Mail International (240) Price Group 9

For the prices and maximum weights for letters, large envelopes (flats), packages (small packets), and postcards, see Notice 123, *Price List*.

Size Limits

Letters: See 241.212
Postcards: See 241.221
Large Envelopes (Flats): See 241.232
Packages (Small Packets): See 241.242 and 241.243

Airmail M-bags (260) — Direct Sack to One Addressee Price Group 9

Refer to Notice 123, *Price List*, for the applicable retail, commercial base, or commercial plus price.
Weight Limit: 66 lbs.

Matter for the Blind (270)

Free when sent as First-Class Mail International, including Priority Mail International Flat Rate Envelopes and Small Flat Rate Priced Boxes. Weight limit: 4 pounds.
Free when sent as Priority Mail International. Weight limit: 15 pounds.

Extra Services

Certificate of Mailing (313)

Individual Pieces	Fee
Individual article (PS Form 3817)	$1.15
Firm mailing books (PS Form 3877), per article listed (minimum 3)	0.44
Duplicate copy of PS Form 3817 or PS Form 3877 (per page)	1.15
Bulk Quantities	**Fee**
First 1,000 pieces (or fraction thereof)	$6.70
Each additional 1,000 pieces (or fraction thereof)	0.80
Duplicate copy of PS Form 3606	1.15

COD and Certified **NOT** for International Mail

International Business Reply Service (382)

Fee: Envelopes up to 2 ounces $1.50; Cards $1.00

International Postal Money Order (371)

Use MO Form MP1
Maximum Amount Available: $700 **Fee:** $4.45
Money Order Inquiry: **Fee:** $5.50

International Reply Coupons (381) **Fee:** $2.20

Registered Mail (330) **Fee:** $11.75

Maximum Indemnity: $47.33
Available for First-Class Mail International, including postcards and Flat Rate Envelopes and Small Flat Rate Priced Boxes, and matter for the blind or other physically handicapped persons. Not applicable to M-bags.

Restricted Delivery (350) NOT Available

Return Receipt (340) **Fee:** $2.35

Available for registered mail and insured Priority Mail International parcels only.

Guadeloupe
(Includes Saint Bartholomew and Saint Martin)

Country Conditions for Mailing

Prohibitions (130)
Perishable infectious biological substances.
Perishable noninfectious biological substances.
Radioactive materials.

Restrictions
Coins; banknotes; currency notes; securities payable to bearer; traveler's checks; manufactured and unmanufactured platinum, gold, and silver; precious stones; jewels; expensive jewelry; and other valuable articles may only be sent in registered First-Class Mail International shipments.
Same as for France.

Observations
Invoices and certificates of origin are required as for France.

Customs Forms Required (123)
First-Class Mail International items and Priority Mail International Flat Rate Envelopes and Small Flat Rate Priced Boxes:
PS Form 2976 (see 123.61)
Priority Mail International parcels:
PS Form 2976-A inside 2976-E (envelope)

Global Express Guaranteed (210) Price Group 7

Refer to Notice 123, *Price List*, for the applicable retail, commercial base, or commercial plus price.
Weight Limit: 70 lbs.

Insurance (212.5)

Insured Amount not over	Fee	Insured Amount not over	Fee
$100	No Fee	For document reconstruction insurance or non-document insurance coverage above $800, add $1.00 per $100 or fraction thereof, up to a maximum of $2,499 per shipment.	
200	$1.00		
300	2.00		
400	3.00		
500	4.00		
600	5.00		
700	6.00		
800	7.00	$2,499 max.	$24.00

Value Limit (212.1)
The maximum value of a GXG shipment to this country is $2,499 or a lesser amount if limited by content or value.

Size Limits (211.22)
The surface area of the address side of the item to be mailed must be large enough to completely contain the Global Express Guaranteed Air Waybill/Shipping Invoice (shipping label), postage, endorsement, and any applicable markings. The shipping label is approximately 5.5 inches high and 9.5 inches long.
Maximum length: 46 inches
Maximum width: 35 inches
Maximum height: 46 inches
Maximum length and girth combined: 108 inches

General Conditions for Mailing
See Publication 141, *Global Express Guaranteed Service Guide,* for information about areas served in the destination country, allowable contents, packaging and labeling requirements, tracking and tracing, service standards, and other conditions for mailing.

Express Mail International (220) Price Group 9

Refer to Notice 123, *Price List*, for the applicable retail, commercial base, or commercial plus price.
Weight Limit: 66 lbs.

Express Mail International — Flat Rate Envelope and Flat Rate Boxes
The maximum weight for the Express Mail International Flat Rate Envelope and the Express Mail International Flat Rate Boxes is 20 pounds. Refer to Notice 123, *Price List*, for the applicable retail, commercial base, or commercial plus price.

Insurance (222.8)
Available for **Express Mail International merchandise shipments** only

Insured Amount not over	Fee	Insured Amount not over	Fee
$100	No Fee	For insurance coverage above $2,000, add $1.50 for each $500 or fraction thereof, up to a maximum of $5,000 per shipment.	
200	$0.85		
500	2.35		
1,000	3.85		
1,500	5.35		
2,000	6.85	$5,000 max.	$15.85

Articles Admitted	Required Customs Form/Endorsement
Correspondence and business papers.	PS Form 2976, *Customs — CN 22 and Sender's Declaration.* Endorse item clearly next to mailing label as BUSINESS PAPERS.
Merchandise samples without commercial value and not subject to customs duty.	PS Form 2976, *Customs — CN 22 and Sender's Declaration.*
Merchandise and all articles subject to customs duty.	PS Form 2976-A, *Customs Declaration and Dispatch Note CP 72,* inside a PS Form 2976-E, *Customs Declaration Envelope CP 91.* Include a commercial invoice in each item.

Size Limits (221.52)
Maximum length: 36 inches
Maximum length and girth combined: 79 inches

Note:
Coins; banknotes; currency notes, including paper money; securities of any kind payable to bearer; traveler's checks; platinum, gold, and silver; precious stones; jewelry; watches; and other valuable articles are prohibited in Express Mail International shipments to Guadeloupe. All items prohibited in regular international mail are also prohibited in Express Mail International to Guadeloupe.

Reciprocal Service Name: Chronopost

Country Code: GP

Areas Served: All

Priority Mail International (230) Price Group 9

Refer to Notice 123, *Price List*, for the applicable retail, commercial base, or commercial plus price.
Weight Limit: 66 lbs.

Note: *Ordinary Priority Mail International includes indemnity at no cost based on weight. (See 230.)*

Priority Mail International — Flat Rate

Flat Rate Envelopes or Small Flat Rate Priced Boxes: The maximum weight is 4 pounds. Refer to Notice 123, *Price List*, for the applicable retail, commercial base, or commercial plus price.

Flat Rate Boxes — Medium and Large: The maximum weight is 20 pounds, or the limit set by the individual country, whichever is less. Refer to Notice 123, *Price List*, for the retail, commercial base, or commercial plus price.

Insurance (232.92)

Available for **Priority Mail International merchandise parcels** only (see 323.72 for markings)

Insured Amount not over	Fee	Insured Amount not over	Fee
$50	$2.45		
100	3.60	Add $1.15 for each additional $100 or fraction of insurance coverage.	
200	4.75		
300	5.90		
400	7.05		
500	8.20	$5,000 max.	$59.95

Size Limits (231.22)

Maximum length: 42 inches
Maximum length and girth combined: 79 inches

First-Class Mail International (240) Price Group 9

For the prices and maximum weights for letters, large envelopes (flats), packages (small packets), and postcards, see Notice 123, *Price List*.

Size Limits

Letters: See 241.212
Postcards: See 241.221
Large Envelopes (Flats): See 241.232
Packages (Small Packets): See 241.242 and 241.243

Airmail M-bags (260) — Direct Sack to One Addressee Price Group 9

Refer to Notice 123, *Price List*, for the applicable retail, commercial base, or commercial plus price.
Weight Limit: 66 lbs.

Matter for the Blind (270)

Free when sent as First-Class Mail International, including Priority Mail International Flat Rate Envelopes and Small Flat Rate Priced Boxes. Weight limit: 4 pounds.
Free when sent as Priority Mail International. Weight limit: 15 pounds.

Extra Services

Certificate of Mailing (313)

Individual Pieces	Fee
Individual article (PS Form 3817)	$1.15
Firm mailing books (PS Form 3877), per article listed (minimum 3)	0.44
Duplicate copy of PS Form 3817 or PS Form 3877 (per page)	1.15
Bulk Quantities	**Fee**
First 1,000 pieces (or fraction thereof)	$6.70
Each additional 1,000 pieces (or fraction thereof)	0.80
Duplicate copy of PS Form 3606	1.15

COD and Certified

NOT for International Mail

International Business Reply Service (382)

Fee: Envelopes up to 2 ounces $1.50; Cards $1.00

International Postal Money Order (371)

NOT Available

International Reply Coupons (381)

Fee: $2.20

Registered Mail (330)

Fee: $11.75

Maximum Indemnity: $47.33
Available for First-Class Mail International, including postcards and Flat Rate Envelopes and Small Flat Rate Priced Boxes, and matter for the blind or other physically handicapped persons. Not applicable to M-bags.

Restricted Delivery (350)

NOT Available

Return Receipt (340)

Fee: $2.35

Available for registered mail and insured Priority Mail International parcels only.

Guatemala

Country Conditions for Mailing

Prohibitions (130)

Arms in general, except certain arms for hunting; military supplies of all kinds.
Coins; banknotes; currency notes; securities payable to bearer; traveler's checks; manufactured and unmanufactured platinum, gold, and silver; precious stones; jewels; and other valuable articles.
Feeding bottles and feeding bottles with glass tubes.
Gardenia plants and seeds.
Police whistles.
Powder of all kinds.
Telegraphic apparatus.

Restrictions

No list furnished.

Observations

Tape, adhesive strips, or gummed paper should not be used to seal registered items unless the signature or name of the sender is written or stamped on the tape.

Customs Forms Required (123)

First-Class Mail International items and Priority Mail International Flat Rate Envelopes and Small Flat Rate Priced Boxes:
PS Form 2976 (see 123.61)
Priority Mail International parcels:
PS Form 2976-A inside 2976-E (envelope)

Global Express Guaranteed (210) Price Group 8

Refer to Notice 123, *Price List*, for the applicable retail, commercial base, or commercial plus price.
Weight Limit: 70 lbs.

Insurance (212.5)

Insured Amount not over	Fee	Insured Amount not over	Fee
$100	No Fee	For document reconstruction insurance or non-document insurance coverage above $800, add $1.00 per $100 or fraction thereof, up to a maximum of $2,499 per shipment.	
200	$1.00		
300	2.00		
400	3.00		
500	4.00		
600	5.00		
700	6.00		
800	7.00	$2,499 max.	$24.00

Value Limit (212.1)

The maximum value of a GXG shipment to this country is $2,499 or a lesser amount if limited by content or value.

Size Limits (211.22)

The surface area of the address side of the item to be mailed must be large enough to completely contain the Global Express Guaranteed Air Waybill/Shipping Invoice (shipping label), postage, endorsement, and any applicable markings. The shipping label is approximately 5.5 inches high and 9.5 inches long.
Maximum length: 46 inches
Maximum width: 35 inches
Maximum height: 46 inches
Maximum length and girth combined: 108 inches

General Conditions for Mailing

See Publication 141, *Global Express Guaranteed Service Guide,* for information about areas served in the destination country, allowable contents, packaging and labeling requirements, tracking and tracing, service standards, and other conditions for mailing.

Express Mail International (220) Price Group 9

Refer to Notice 123, *Price List*, for the applicable retail, commercial base, or commercial plus price.
Weight Limit: 66 lbs.

Express Mail International — Flat Rate Envelope and Flat Rate Boxes

The maximum weight for the Express Mail International Flat Rate Envelope and the Express Mail International Flat Rate Boxes is 20 pounds. Refer to Notice 123, *Price List*, for the applicable retail, commercial base, or commercial plus price.

Insurance (222.8)

Note: Express Mail International merchandise insurance is not available to this country. Document reconstruction insurance coverage is provided, at no additional cost, to a maximum of $100 per shipment. See 222.72.

Articles Admitted	Required Customs Form/Endorsement
Correspondence and business papers.	PS Form 2976, *Customs — CN 22 and Sender's Declaration.* Endorse item clearly next to mailing label as BUSINESS PAPERS.
Merchandise samples without commercial value.	PS Form 2976, *Customs — CN 22 and Sender's Declaration.*

Size Limits (221.52)

Maximum length: 36 inches
Maximum length and girth combined: 79 inches

Notes:

1. Merchandise and all articles subject to customs duty are prohibited in Express Mail International shipments.
2. Coins; banknotes; currency notes, including paper money; securities of any kind payable to bearer; traveler's checks; platinum, gold, and silver; precious stones; jewelry; watches; and other valuable articles are prohibited in Express Mail International shipments to Guatemala.

Reciprocal Service Name: EMS Guatemala/Quetzal Post

Country Code: GT

Areas Served:
Antigua Guatemala, Guatemala City, Huehuetenango, Puerto Barrios, Quezaltenango, Retalhuleu.

Priority Mail International (230) Price Group 9

Refer to Notice 123, *Price List*, for the applicable retail, commercial base, or commercial plus price.
Weight Limit: 44 lbs.

Note: *Ordinary Priority Mail International includes indemnity at no cost based on weight. (See 230.)*

Priority Mail International — Flat Rate
Flat Rate Envelopes or Small Flat Rate Priced Boxes: The maximum weight is 4 pounds. Refer to Notice 123, *Price List*, for the applicable retail, commercial base, or commercial plus price.

Flat Rate Boxes — Medium and Large: The maximum weight is 20 pounds, or the limit set by the individual country, whichever is less. Refer to Notice 123, *Price List*, for the retail, commercial base, or commercial plus price.

Insurance (232.92) NOT Available

Size Limits (231.22)
Maximum length: 42 inches
Maximum length and girth combined: 79 inches

First-Class Mail International (240) Price Group 9
For the prices and maximum weights for letters, large envelopes (flats), packages (small packets), and postcards, see Notice 123, *Price List*.

Size Limits
Letters: See 241.212
Postcards: See 241.221
Large Envelopes (Flats): See 241.232
Packages (Small Packets): See 241.242 and 241.243

Airmail M-bags (260) — Direct Sack to One Addressee Price Group 9

Refer to Notice 123, *Price List*, for the applicable retail, commercial base, or commercial plus price.
Weight Limit: 66 lbs.

Matter for the Blind (270)
Free when sent as First-Class Mail International, including Priority Mail International Flat Rate Envelopes and Small Flat Rate Priced Boxes. Weight limit: 4 pounds.
Free when sent as Priority Mail International. Weight limit: 15 pounds.

Extra Services

Certificate of Mailing (313)

Individual Pieces	Fee
Individual article (PS Form 3817)	$1.15
Firm mailing books (PS Form 3877), per article listed (minimum 3)	0.44
Duplicate copy of PS Form 3817 or PS Form 3877 (per page)	1.15
Bulk Quantities	**Fee**
First 1,000 pieces (or fraction thereof)	$6.70
Each additional 1,000 pieces (or fraction thereof)	0.80
Duplicate copy of PS Form 3606	1.15

COD and Certified **NOT** for International Mail

International Business Reply Service (382)
Fee: Envelopes up to 2 ounces $1.50; Cards $1.00

International Postal Money Order (371)
NOT Available

International Reply Coupons (381) **Fee:** $2.20

Registered Mail (330) **Fee:** $11.75
Maximum Indemnity: $47.33
Available for First-Class Mail International, including postcards and Flat Rate Envelopes and Small Flat Rate Priced Boxes, and matter for the blind or other physically handicapped persons. Not applicable to M-bags.

Restricted Delivery (350) **Fee:** $4.55
Available for registered mail with a return receipt.
Endorsements: A entragar en propia mano.

Return Receipt (340) **Fee:** $2.35
Available for registered mail only.

Guinea

Country Conditions for Mailing

Prohibitions (130)

Arms, ammunition, daggers, sword-canes, brass knuckles, blackjacks, and other secret weapons.
Articles bearing the "Red Cross" or "Geneva Cross" as a trademark.
Coins; banknotes; currency notes; securities payable to bearer; traveler's checks; manufactured and unmanufactured platinum, gold, silver; precious stones; jewels; and other valuable articles.
Foreign products, natural or manufactured, having markings, labels, or wrappings of any kind that may give the impression that they are of French origin.
Perishable infectious biological substances.
Perishable noninfectious biological substances.
Radioactive materials.
Weights and measures not of the metric system.

Restrictions

Foreign products from a place having the same name as a place in France must bear, in addition to the name of that place, the name of the country of origin and the word "imported" in clearly visible letters.
Tinned fish, vegetables, and plums must bear on each container an indication of the country of origin in raised or sunken letters at least 4 millimeters (3/8 inch) high, in the middle of the lid and of the bottom, in a space not bearing any inscription. Cases and wrappers containing these products must bear adhering letters indicating the country of origin.

Observations

None

Customs Forms Required (123)

First-Class Mail International items and Priority Mail International Flat Rate Envelopes and Small Flat Rate Priced Boxes:
PS Form 2976 (see 123.61)
Priority Mail International parcels:
PS Form 2976-A inside 2976-E (envelope)

Global Express Guaranteed (210) Price Group 4

Refer to Notice 123, *Price List*, for the applicable retail, commercial base, or commercial plus price.
Weight Limit: 70 lbs.

Insurance (212.5)

Insured Amount not over	Fee	Insured Amount not over	Fee
$100	No Fee	For document reconstruction insurance or non-document insurance coverage above $800, add $1.00 per $100 or fraction thereof, up to a maximum of $2,499 per shipment.	
200	$1.00		
300	2.00		
400	3.00		
500	4.00		
600	5.00		
700	6.00		
800	7.00	$2,499 max.	$24.00

Value Limit (212.1)

The maximum value of a GXG shipment to this country is $2,499 or a lesser amount if limited by content or value.

Size Limits (211.22)

The surface area of the address side of the item to be mailed must be large enough to completely contain the Global Express Guaranteed Air Waybill/Shipping Invoice (shipping label), postage, endorsement, and any applicable markings. The shipping label is approximately 5.5 inches high and 9.5 inches long.
Maximum length: 46 inches
Maximum width: 35 inches
Maximum height: 46 inches
Maximum length and girth combined: 108 inches

General Conditions for Mailing

See Publication 141, *Global Express Guaranteed Service Guide,* for information about areas served in the destination country, allowable contents, packaging and labeling requirements, tracking and tracing, service standards, and other conditions for mailing.

Express Mail International (220) Price Group 7

Refer to Notice 123, *Price List*, for the applicable retail, commercial base, or commercial plus price.
Weight Limit: 44 lbs.

Express Mail International — Flat Rate Envelope and Flat Rate Boxes

The maximum weight for the Express Mail International Flat Rate Envelope and the Express Mail International Flat Rate Boxes is 20 pounds. Refer to Notice 123, *Price List*, for the applicable retail, commercial base, or commercial plus price.

Insurance (222.8)

Available for **Express Mail International merchandise shipments** only

Insured Amount not over	Fee	Insured Amount not over	Fee
$100	No Fee	For insurance coverage above $2,000, add $1.50 for each $500 or fraction thereof, up to a maximum of $5,000 per shipment.	
200	$0.85		
500	2.35		
1,000	3.85		
1,500	5.35		
2,000	6.85	$5,000 max.	$15.85

Articles Admitted	Required Customs Form/Endorsement
Correspondence, business papers, and documents.	PS Form 2976, *Customs — CN 22 and Sender's Declaration.* Endorse item clearly next to mailing label as BUSINESS PAPERS.
Merchandise samples without commercial value.	PS Form 2976-A, *Customs Declaration and Dispatch Note CP 72,* inside a PS Form 2976-E, *Customs Declaration Envelope CP 91*, endorsed with the letter "M."
Merchandise and all articles subject to customs duty.	PS Form 2976-A, *Customs Declaration and Dispatch Note CP 72,* inside a PS Form 2976-E, *Customs Declaration Envelope CP 91*, endorsed with the letter "M."

Size Limits (221.52)

Maximum length: 36 inches
Maximum length and girth combined: 79 inches

Notes:

1. An invoice must accompany all shipments containing merchandise.
2. The addressee must pick up merchandise at customs.
3. Coins; banknotes; currency notes, including paper money; securities of any kind payable to bearer; traveler's checks; platinum, gold, and silver; precious stones; jewelry; watches; and other valuable articles are prohibited in Express Mail International shipments to Guinea.

Reciprocal Service Name: Courrier Accelere International EMS

Country Code: GN

Areas Served:
Conakry (postal code CKRY 001), Coyah, Dubreka.

Priority Mail International (230) Price Group 7

Refer to Notice 123, *Price List*, for the applicable retail, commercial base, or commercial plus price.
Weight Limit: 66 lbs.

Note: *Ordinary Priority Mail International includes indemnity at no cost based on weight. (See 230.)*

Priority Mail International — Flat Rate

Flat Rate Envelopes or Small Flat Rate Priced Boxes: The maximum weight is 4 pounds. Refer to Notice 123, *Price List*, for the applicable retail, commercial base, or commercial plus price.

Flat Rate Boxes — Medium and Large: The maximum weight is 20 pounds, or the limit set by the individual country, whichever is less. Refer to Notice 123, *Price List*, for the retail, commercial base, or commercial plus price.

Insurance (232.92)

Available for **Priority Mail International merchandise parcels** only (see 323.72 for markings)

Insured Amount not over	Fee	Insured Amount not over	Fee
$50	$2.45		
100	3.60	Add $1.15 for each additional $100 or fraction of insurance coverage.	
200	4.75		
300	5.90		
400	7.05		
500	8.20	$948 max.	$13.95

Size Limits (231.22)

Maximum length: 42 inches
Maximum length and girth combined: 79 inches

First-Class Mail International (240) Price Group 7

For the prices and maximum weights for letters, large envelopes (flats), packages (small packets), and postcards, see Notice 123, *Price List*.

Size Limits

Letters: See 241.212
Postcards: See 241.221
Large Envelopes (Flats): See 241.232
Packages (Small Packets): See 241.242 and 241.243

Airmail M-bags (260) — Direct Sack to One Addressee Price Group 7

Refer to Notice 123, *Price List*, for the applicable retail, commercial base, or commercial plus price.
Weight Limit: 66 lbs.

Matter for the Blind (270) NOT Available

Extra Services

Certificate of Mailing (313)

Individual Pieces	Fee
Individual article (PS Form 3817)	$1.15
Firm mailing books (PS Form 3877), per article listed (minimum 3)	0.44
Duplicate copy of PS Form 3817 or PS Form 3877 (per page)	1.15
Bulk Quantities	**Fee**
First 1,000 pieces (or fraction thereof)	$6.70
Each additional 1,000 pieces (or fraction thereof)	0.80
Duplicate copy of PS Form 3606	1.15

COD and Certified **NOT** for International Mail

International Business Reply Service (382)

Fee: Envelopes up to 2 ounces $1.50; Cards $1.00

International Postal Money Order (371)

Use MO Form MP1
Maximum Amount Available: $700 **Fee:** $4.45
Money Order Inquiry: **Fee:** $5.50

International Reply Coupons (381) **Fee:** $2.20

Registered Mail (330) **Fee:** $11.75

Maximum Indemnity: $47.33
Available for First-Class Mail International, including postcards and Flat Rate Envelopes and Small Flat Rate Priced Boxes, and matter for the blind or other physically handicapped persons. Not applicable to M-bags.

Restricted Delivery (350) **Fee:** $4.55

Available for registered mail with a return receipt.
Endorsements: A remettre en main propre.

Return Receipt (340) **Fee:** $2.35

Available for registered mail and insured Priority Mail International parcels only.

Guinea-Bissau

Country Conditions for Mailing

Prohibitions (130)
Perishable infectious biological substances.
Radioactive materials.

Restrictions
Arms, munitions, and war material require the authorization of the military authorities.

Observations
None

Customs Forms Required (123)
First-Class Mail International items and Priority Mail International Flat Rate Envelopes and Small Flat Rate Priced Boxes:
PS Form 2976 (see 123.61)
Priority Mail International parcels:
PS Form 2976-A inside 2976-E (envelope)

Global Express Guaranteed (210)

Not Available

Express Mail International (220) **Price Group 7**

Refer to Notice 123, *Price List*, for the applicable retail, commercial base, or commercial plus price.
Weight Limit: 44 lbs.

Express Mail International — Flat Rate Envelope and Flat Rate Boxes

The maximum weight for the Express Mail International Flat Rate Envelope and the Express Mail International Flat Rate Boxes is 20 pounds. Refer to Notice 123, *Price List*, for the applicable retail, commercial base, or commercial plus price.

Insurance (222.8)
Available for **Express Mail International merchandise shipments** only

Insured Amount not over	Fee	Insured Amount not over	Fee
$100	No Fee	For insurance coverage above $2,000, add $1.50 for each $500 or fraction thereof, up to a maximum of $5,000 per shipment.	
200	$0.85		
500	2.35		
1,000	3.85		
1,500	5.35		
2,000	6.85	$5,000 max.	$15.85

Articles Admitted	Required Customs Form/Endorsement
Correspondence and business papers.	PS Form 2976, *Customs — CN 22 and Sender's Declaration.*
Merchandise samples without commercial value and not subject to customs duty.	PS Form 2976, *Customs — CN 22 and Sender's Declaration.*
Merchandise and all articles subject to customs duty.	PS Form 2976-A, *Customs Declaration and Dispatch Note CP 72,* inside a PS Form 2976-E, *Customs Declaration Envelope CP 91.*

Size Limits (221.52)
Maximum length: 36 inches
Maximum length and girth combined: 79 inches

Note:
Coins; banknotes; currency notes, including paper money; securities of any kind payable to bearer; traveler's checks; platinum, gold, and silver; precious stones; jewelry; watches; and other valuable articles are prohibited in Express Mail International shipments to Guinea-Bissau.

Reciprocal Service Name: Service Rapide-EMS

Country Code: GW

Areas Served: All

Priority Mail International (230) **Price Group 7**

Refer to Notice 123, *Price List*, for the applicable retail, commercial base, or commercial plus price.
Weight Limit: 66 lbs.

Note: *Ordinary Priority Mail International includes indemnity at no cost based on weight. (See 230.)*

Priority Mail International — Flat Rate
Flat Rate Envelopes or Small Flat Rate Priced Boxes: The maximum weight is 4 pounds. Refer to Notice 123, *Price List*, for the applicable retail, commercial base, or commercial plus price.

Flat Rate Boxes — Medium and Large: The maximum weight is 20 pounds, or the limit set by the individual country, whichever is less. Refer to Notice 123, *Price List*, for the retail, commercial base, or commercial plus price.

Insurance (232.92)
Available for **Priority Mail International merchandise parcels** only (see 323.72 for markings)

Insured Amount not over	Fee	Insured Amount not over	Fee
$50	$2.45		
100	3.60	Add $1.15 for each additional $100 or fraction of insurance coverage.	
200	4.75		
300	5.90		
400	7.05		
500	8.20	$2,915 max.	$36.95

Size Limits (231.22)
Maximum length: 42 inches
Maximum length and girth combined: 79 inches

First-Class Mail International (240) **Price Group 7**
For the prices and maximum weights for letters, large envelopes (flats), packages (small packets), and postcards, see Notice 123, *Price List*.

Size Limits
Letters: See 241.212
Postcards: See 241.221
Large Envelopes (Flats): See 241.232
Packages (Small Packets): See 241.242 and 241.243

Airmail M-bags (260) — Direct Sack to One Addressee

Price Group 7

Refer to Notice 123, *Price List*, for the applicable retail, commercial base, or commercial plus price.
Weight Limit: 66 lbs.

Matter for the Blind (270)

NOT Available

Extra Services

Certificate of Mailing (313)

Individual Pieces	**Fee**
Individual article (PS Form 3817)	$1.15
Firm mailing books (PS Form 3877), per article listed (minimum 3)	0.44
Duplicate copy of PS Form 3817 or PS Form 3877 (per page)	1.15
Bulk Quantities	**Fee**
First 1,000 pieces (or fraction thereof)	$6.70
Each additional 1,000 pieces (or fraction thereof)	0.80
Duplicate copy of PS Form 3606	1.15

COD and Certified

NOT for International Mail

International Business Reply Service (382)

Fee: Envelopes up to 2 ounces $1.50; Cards $1.00

International Postal Money Order (371)

NOT Available

International Reply Coupons (381)

Fee: $2.20

Registered Mail (330)

Fee: $11.75

Maximum Indemnity: $47.33
Available for First-Class Mail International, including postcards and Flat Rate Envelopes and Small Flat Rate Priced Boxes, and matter for the blind or other physically handicapped persons. Not applicable to M-bags.

Restricted Delivery (350)

Fee: $4.55

Available for registered mail with a return receipt.
Endorsements: A remettre en main propre.

Return Receipt (340)

Fee: $2.35

Available for registered mail and insured Priority Mail International parcels only.

Guyana

Country Conditions for Mailing

Prohibitions (130)

All kinds of linen.
Bees and silkworms.
Circulars, advertisement, or tickets relating to lotteries.
Clocks, watches, or other articles bearing any imitation of a British assay mark.
Coins; banknotes; currency notes; securities payable to bearer; traveler's checks; manufactured and unmanufactured platinum, gold, silver; precious stones; jewelry; and other valuable articles.
Furniture and fixtures.
Most foodstuffs including, meats, fish, vegetables, nuts, fruit, bakery products, and confectionery.
Newsprint paper.
Perishable infectious biological substances.
Perishable noninfectious biological substances.
Radioactive materials.

Restrictions

No list furnished.

Observations

1. Many articles are prohibited entry or restricted entry into Guyana. Senders should ascertain from the addressee before mailing whether the articles will be admitted.
2. All applications for import licenses must be made to the Ministry of Trade, 18 Brickdam, Georgetown, Guyana.
3. Tape, adhesive strips, or gummed paper should not be used to seal registered items unless the signature or name of the sender is written or stamped on the tape.

Customs Forms Required (123)

First-Class Mail International items and Priority Mail International Flat Rate Envelopes and Small Flat Rate Priced Boxes:
PS Form 2976 (see 123.61)
Priority Mail International parcels:
PS Form 2976-A inside 2976-E (envelope)

Global Express Guaranteed (210) Price Group 8

Refer to Notice 123, *Price List*, for the applicable retail, commercial base, or commercial plus price.
Weight Limit: 70 lbs.

Insurance (212.5)

Insured Amount not over	Fee	Insured Amount not over	Fee
$100	No Fee	For document reconstruction insurance or non-document insurance coverage above $800, add $1.00 per $100 or fraction thereof, up to a maximum of $2,499 per shipment.	
200	$1.00		
300	2.00		
400	3.00		
500	4.00		
600	5.00		
700	6.00		
800	7.00	$2,499 max.	$24.00

Value Limit (212.1)

The maximum value of a GXG shipment to this country is $2,499 or a lesser amount if limited by content or value.

Size Limits (211.22)

The surface area of the address side of the item to be mailed must be large enough to completely contain the Global Express Guaranteed Air Waybill/Shipping Invoice (shipping label), postage, endorsement, and any applicable markings. The shipping label is approximately 5.5 inches high and 9.5 inches long.
Maximum length: 46 inches
Maximum width: 35 inches
Maximum height: 46 inches
Maximum length and girth combined: 108 inches

General Conditions for Mailing

See Publication 141, *Global Express Guaranteed Service Guide,* for information about areas served in the destination country, allowable contents, packaging and labeling requirements, tracking and tracing, service standards, and other conditions for mailing.

Express Mail International (220) Price Group 9

Refer to Notice 123, *Price List*, for the applicable retail, commercial base, or commercial plus price.
Weight Limit: 66 lbs.

Express Mail International — Flat Rate Envelope and Flat Rate Boxes

The maximum weight for the Express Mail International Flat Rate Envelope and the Express Mail International Flat Rate Boxes is 20 pounds. Refer to Notice 123, *Price List*, for the applicable retail, commercial base, or commercial plus price.

Insurance (222.8)

Available for **Express Mail International merchandise shipments** only

Insured Amount not over	Fee	Insured Amount not over	Fee
$100	No Fee	For insurance coverage above $2,000, add $1.50 for each $500 or fraction thereof, up to a maximum of $5,000 per shipment.	
200	$0.85		
500	2.35		
1,000	3.85		
1,500	5.35		
2,000	6.85	$5,000 max.	$15.85

Articles Admitted	Required Customs Form/Endorsement
Correspondence, business papers, and computer data.	No form required. Endorse item clearly next to mailing label as BUSINESS PAPERS.
Merchandise samples without commercial value.	PS Form 2976, *Customs — CN 22 and Sender's Declaration.*
Merchandise and all articles subject to customs duty.	PS Form 2976-A, *Customs Declaration and Dispatch Note CP 72,* inside a PS Form 2976-E, *Customs Declaration Envelope CP 91*.

Size Limits (221.52)

Maximum length: 36 inches
Maximum length and girth combined: 79 inches

Note:
Coins; banknotes; currency notes, including paper money; securities of any kind payable to bearer; traveler's checks; platinum, gold, and silver; precious stones; jewelry; watches; and other valuable articles are prohibited in Express Mail International shipments to Guyana.

Reciprocal Service Name: Data Post

Country Code: GY

Areas Served: All

Priority Mail International (230) Price Group 9

Refer to Notice 123, *Price List*, for the applicable retail, commercial base, or commercial plus price.
Weight Limit: 44 lbs.

Note: *Ordinary Priority Mail International includes indemnity at no cost based on weight. (See 230.)*

Priority Mail International — Flat Rate
Flat Rate Envelopes or Small Flat Rate Priced Boxes: The maximum weight is 4 pounds. Refer to Notice 123, *Price List*, for the applicable retail, commercial base, or commercial plus price.

Flat Rate Boxes — Medium and Large: The maximum weight is 20 pounds, or the limit set by the individual country, whichever is less. Refer to Notice 123, *Price List*, for the retail, commercial base, or commercial plus price.

Insurance (232.92)
Available for **Priority Mail International merchandise parcels** only (see 323.72 for markings)

Insured Amount not over	Fee
$10 max.	$2.45

Size Limits (231.22)
Maximum length: 42 inches
Maximum length and girth combined: 79 inches

First-Class Mail International (240) Price Group 9
For the prices and maximum weights for letters, large envelopes (flats), packages (small packets), and postcards, see Notice 123, *Price List*.

Size Limits
Letters: See 241.212
Postcards: See 241.221
Large Envelopes (Flats): See 241.232
Packages (Small Packets): See 241.242 and 241.243

Airmail M-bags (260) — Direct Sack to One Addressee Price Group 9

Refer to Notice 123, *Price List*, for the applicable retail, commercial base, or commercial plus price.
Weight Limit: 66 lbs.

Matter for the Blind (270)
Free when sent as First-Class Mail International, including Priority Mail International Flat Rate Envelopes and Small Flat Rate Priced Boxes. Weight limit: 4 pounds.
Free when sent as Priority Mail International. Weight limit: 15 pounds.

Extra Services

Certificate of Mailing (313)

Individual Pieces	Fee
Individual article (PS Form 3817)	$1.15
Firm mailing books (PS Form 3877), per article listed (minimum 3)	0.44
Duplicate copy of PS Form 3817 or PS Form 3877 (per page)	1.15
Bulk Quantities	**Fee**
First 1,000 pieces (or fraction thereof)	$6.70
Each additional 1,000 pieces (or fraction thereof)	0.80
Duplicate copy of PS Form 3606	1.15

COD and Certified
NOT for International Mail

International Business Reply Service (382)
Fee: Envelopes up to 2 ounces $1.50; Cards $1.00

International Postal Money Order (371)
Use MO Form MP1
Maximum Amount Available: $500 **Fee:** $4.45
Money Order Inquiry: **Fee:** $5.50

International Reply Coupons (381)
Fee: $2.20

Registered Mail (330)
Fee: $11.75
Maximum Indemnity: $47.33
Available for First-Class Mail International, including postcards and Flat Rate Envelopes and Small Flat Rate Priced Boxes, and matter for the blind or other physically handicapped persons. Not applicable to M-bags.

Restricted Delivery (350)
NOT Available

Return Receipt (340)
Fee: $2.35
Available for registered mail and insured Priority Mail International parcels only.

Haiti

Country Conditions for Mailing

Prohibitions (130)
Arms, ammunition.
Articles, documents, pamphlets, posters, books, printed papers of a seditious, insulting, or immoral nature.
Jewelry.
Perishable infectious biological substances.
Perishable noninfectious biological substances.
Radioactive materials.

Restrictions
No list furnished.

Observations
If addressees in Haiti fail to pay the import duties after acceptance and verification of their shipments, the contents may be sold at auction by the customs authorities.

Customs Forms Required (123)
First-Class Mail International items and Priority Mail International Flat Rate Envelopes and Small Flat Rate Priced Boxes:
PS Form 2976 (see 123.61)
Priority Mail International parcels:
PS Form 2976-A inside 2976-E (envelope)

Global Express Guaranteed (210) Price Group 7

Refer to Notice 123, *Price List*, for the applicable retail, commercial base, or commercial plus price.
Weight Limit: 70 lbs.

Insurance (212.5)

Insured Amount not over	Fee	Insured Amount not over	Fee
$100	No Fee	For document reconstruction insurance or non-document insurance coverage above $800, add $1.00 per $100 or fraction thereof, up to a maximum of $2,499 per shipment.	
200	$1.00		
300	2.00		
400	3.00		
500	4.00		
600	5.00		
700	6.00		
800	7.00	$2,499 max.	$24.00

Value Limit (212.1)
The maximum value of a GXG shipment to this country is $2,499 or a lesser amount if limited by content or value.

Size Limits (211.22)
The surface area of the address side of the item to be mailed must be large enough to completely contain the Global Express Guaranteed Air Waybill/Shipping Invoice (shipping label), postage, endorsement, and any applicable markings. The shipping label is approximately 5.5 inches high and 9.5 inches long.
Maximum length: 46 inches
Maximum width: 35 inches
Maximum height: 46 inches
Maximum length and girth combined: 108 inches

General Conditions for Mailing
See Publication 141, *Global Express Guaranteed Service Guide,* for information about areas served in the destination country, allowable contents, packaging and labeling requirements, tracking and tracing, service standards, and other conditions for mailing.

Express Mail International (220) Price Group 9

Refer to Notice 123, *Price List*, for the applicable retail, commercial base, or commercial plus price.
Weight Limit: 66 lbs.

Express Mail International — Flat Rate Envelope and Flat Rate Boxes
The maximum weight for the Express Mail International Flat Rate Envelope and the Express Mail International Flat Rate Boxes is 20 pounds. Refer to Notice 123, *Price List*, for the applicable retail, commercial base, or commercial plus price.

Insurance (222.8)
Available for **Express Mail International merchandise shipments** only

Insured Amount not over	Fee	Insured Amount not over	Fee
$100	No Fee	For insurance coverage above $2,000, add $1.50 for each $500 or fraction thereof, up to a maximum of $5,000 per shipment.	
200	$0.85		
500	2.35		
1,000	3.85		
1,500	5.35		
2,000	6.85	$5,000 max.	$15.85

Articles Admitted	Required Customs Form/Endorsement
Business correspondence, commercial papers and documents. Next to mailing label, clearly endorse item BUSINESS PAPERS.	PS Form 2976, *Customs — CN 22 and Sender's Declaration*.
Merchandise samples without commercial value and not subject to customs duty.	PS Form 2976, *Customs — CN 22 Sender's Declaration.*
Merchandise samples, gifts, computer data including computer cards, magnetic tape microfilm, and microfiche.	PS Form 2976-A, *Customs Declaration and Dispatch Note CP 72,* inside a PS Form 2976-E, *Customs Declaration Envelope CP 91.*
Merchandise and all articles subject to customs duty. Include commercial invoice in each item.	PS Form 2976-A, *Customs Declaration and Dispatch Note CP 72*, inside a PS Form 2976-E, *Customs Declaration Envelope CP 91*. A commercial invoice must be attached to the outside of all commercial shipments.

Size Limits (221.52)
Maximum length: 36 inches
Maximum length and girth combined: 79 inches

Notes:

1. Items are delivered Monday through Saturday (until 12 noon). There is no delivery on Sunday or on national holidays.
2. All items admissible in international mail to Haiti, including correspondence, business papers, and merchandise, are accepted in Express Mail International. See Prohibitions and Restrictions.
3. Coins; banknotes; currency notes, including paper money; securities of any kind payable to bearer; traveler's checks; platinum, gold, and silver; precious stones; jewelry; watches; and other valuable articles are prohibited in Express Mail International shipments to Haiti. All items prohibited in regular international mail are also prohibited in Express Mail International to Haiti.

Reciprocal Service Name: EMS

Country Code: HT

Areas Served:

Anse-a-Veau	Kenscoff
Aquin	LaColline d'Aquin
Arcahaie	Leogane
Bainet	Liancourt
Cabaret	Limonade
Camp-Perrin	L'Estere
Cap-Haitien	Marchand
Carrefour	Marigot
Cayes	Miragoane
Croix-des-Bouquets	Mirebalais
Croix-des-Missions	Montrouis
Delmas	Petite Riviere de l'Arbonite
Desdunes	Petion-Ville
Fort-Liberte	Petit-Goave
Gonaives	Port-au-Prince
Grande Riviere du Nord	Port-de-Paix
Gressier	Saint-Louis du Nord
Gros-Morne	Saint-Louis du Sud
Hinche	Saint Marc
Jacmel	Trou du Nord
Jeremie	Verrettes

Priority Mail International (230) Price Group 9

Refer toNotice 123, *Price List*, for the applicable retail, commercial base, or commercial plus price.
Weight Limit: 55 lbs.

Note: *Ordinary Priority Mail International includes indemnity at no cost based on weight. (See 230.)*

Priority Mail International — Flat Rate

Flat Rate Envelopes or Small Flat Rate Priced Boxes: The maximum weight is 4 pounds. Refer to Notice 123, *Price List*, for the applicable retail, commercial base, or commercial plus price.

Flat Rate Boxes — Medium and Large: The maximum weight is 20 pounds, or the limit set by the individual country, whichever is less. Refer to Notice 123, *Price List*, for the retail, commercial base, or commercial plus price.

Insurance (232.92) NOT Available

Size Limits (231.22)

Maximum length: 42 inches
Maximum length and girth combined: 79 inches

First-Class Mail International (240) Price Group 9

For the prices and maximum weights for letters, large envelopes (flats), packages (small packets), and postcards, see Notice 123, *Price List*.

Size Limits

Letters: See 241.212
Postcards: See 241.221
Large Envelopes (Flats): See 241.232
Packages (Small Packets): See 241.242 and 241.243

Airmail M-bags (260) — Direct Sack to One Addressee Price Group 9

Refer to Notice 123, *Price List*, for the applicable retail, commercial base, or commercial plus price.
Weight Limit: 66 lbs.

Matter for the Blind (270)

Free when sent as First-Class Mail International, including Priority Mail International Flat Rate Envelopes and Small Flat Rate Priced Boxes. Weight limit: 4 pounds.
Free when sent as Priority Mail International. Weight limit: 15 pounds.

Extra Services

Certificate of Mailing (313)

Individual Pieces	Fee
Individual article (PS Form 3817)	$1.15
Firm mailing books (PS Form 3877), per article listed (minimum 3)	0.44
Duplicate copy of PS Form 3817 or PS Form 3877 (per page)	1.15
Bulk Quantities	**Fee**
First 1,000 pieces (or fraction thereof)	$6.70
Each additional 1,000 pieces (or fraction thereof)	0.80
Duplicate copy of PS Form 3606	1.15

COD and Certified **NOT** for International Mail

International Business Reply Service (382)

Fee: Envelopes up to 2 ounces $1.50; Cards $1.00

International Postal Money Order (371)

NOT Available

International Reply Coupons (381) **Fee:** $2.20

Registered Mail (330) **Fee:** $11.75

Maximum Indemnity: $47.33
Available for First-Class Mail International, including postcards and Flat Rate Envelopes and Small Flat Rate Priced Boxes, and matter for the blind or other physically handicapped persons. Not applicable to M-bags.

Restricted Delivery (350) **Fee:** $4.55

Available for registered mail with a return receipt.
Endorsements: A remettre en main propre.

Return Receipt (340) **Fee:** $2.35

Available for registered mail only.

Honduras

Country Conditions for Mailing

Prohibitions (130)

Coins; banknotes; currency notes; securities payable to bearer; traveler's checks; manufactured and unmanufactured platinum, gold, and silver; precious stones; jewelry; and other valuable articles.
Firearms, parts thereof, and war material.
Perishable infectious biological substances.
Perishable noninfectious biological substances.
Radioactive materials.

Restrictions

No list furnished.

Observations

Used clothing must be accompanied by a certificate of disinfection from the local board of health or from a firm with facilities for disinfecting the articles. Senders must endorse the wrappers of such shipments to show that the certificate of disinfection is enclosed.

Customs Forms Required (123)

First-Class Mail International items and Priority Mail International Flat Rate Envelopes and Small Flat Rate Priced Boxes:
PS Form 2976 (see 123.61)
Priority Mail International parcels:
PS Form 2976-A inside 2976-E (envelope)

Global Express Guaranteed (210) Price Group 8

Refer to Notice 123, *Price List*, for the applicable retail, commercial base, or commercial plus price.
Weight Limit: 70 lbs.

Insurance (212.5)

Insured Amount not over	Fee	Insured Amount not over	Fee
$100	No Fee	For document reconstruction insurance or non-document insurance coverage above $800, add $1.00 per $100 or fraction thereof, up to a maximum of $2,499 per shipment.	
200	$1.00		
300	2.00		
400	3.00		
500	4.00		
600	5.00		
700	6.00		
800	7.00	$2,499 max.	$24.00

Value Limit (212.1)

The maximum value of a GXG shipment to this country is $2,499 or a lesser amount if limited by content or value.

Size Limits (211.22)

The surface area of the address side of the item to be mailed must be large enough to completely contain the Global Express Guaranteed Air Waybill/Shipping Invoice (shipping label), postage, endorsement, and any applicable markings. The shipping label is approximately 5.5 inches high and 9.5 inches long.
Maximum length: 46 inches
Maximum width: 35 inches
Maximum height: 46 inches
Maximum length and girth combined: 108 inches

General Conditions for Mailing

See Publication 141, *Global Express Guaranteed Service Guide,* for information about areas served in the destination country, allowable contents, packaging and labeling requirements, tracking and tracing, service standards, and other conditions for mailing.

Express Mail International (220) Price Group 9

Refer to Notice 123, *Price List*, for the applicable retail, commercial base, or commercial plus price.
Weight Limit: 44 lbs.

Express Mail International — Flat Rate Envelope and Flat Rate Boxes

The maximum weight for the Express Mail International Flat Rate Envelope and the Express Mail International Flat Rate Boxes is 20 pounds. Refer to Notice 123, *Price List*, for the applicable retail, commercial base, or commercial plus price.

Insurance (222.8)

Note: Express Mail International merchandise insurance is not available to this country. Document reconstruction insurance coverage is provided, at no additional cost, to a maximum of $100 per shipment. See 222.72.

Articles Admitted	Required Customs Form/Endorsement
Correspondence and business papers.	PS Form 2976, *Customs — CN 22 and Sender's Declaration.* Endorse item clearly next to mailing label as BUSINESS PAPERS.
Merchandise samples without commercial value and not subject to customs duty.	PS Form 2976, *Customs — CN 22 and Sender's Declaration.*

Size Limits (221.52)

Maximum length: 36 inches
Maximum length and girth combined: 79 inches

Notes:

1. Merchandise and all articles subject to customs duty are prohibited in Express Mail International shipments.
2. Coins; banknotes; currency notes, including paper money; securities of any kind payable to bearer; traveler's checks; platinum, gold, and silver; precious stones; jewelry; watches; and other valuable articles are prohibited in Express Mail International shipments to Honduras.

Reciprocal Service Name: EMS

Country Code: HN

Areas Served:
Express Mail International is available ***only*** to the following locations:
San Pedro Sula
Tegucigalpa

Priority Mail International (230) Price Group 9

Refer to Notice 123, *Price List*, for the applicable retail, commercial base, or commercial plus price.
Weight Limit: 44 lbs.

Note: *Ordinary Priority Mail International includes indemnity at no cost based on weight. (See 230.)*

Priority Mail International — Flat Rate
Flat Rate Envelopes or Small Flat Rate Priced Boxes: The maximum weight is 4 pounds. Refer to Notice 123, *Price List*, for the applicable retail, commercial base, or commercial plus price.

Flat Rate Boxes — Medium and Large: The maximum weight is 20 pounds, or the limit set by the individual country, whichever is less. Refer to Notice 123, *Price List*, for the retail, commercial base, or commercial plus price.

Insurance (232.92) NOT Available

Size Limits (231.22)
Maximum length: 42 inches
Maximum length and girth combined: 79 inches

First-Class Mail International (240) Price Group 9
For the prices and maximum weights for letters, large envelopes (flats), packages (small packets), and postcards, see Notice 123, *Price List*.

Size Limits
Letters: See 241.212
Postcards: See 241.221
Large Envelopes (Flats): See 241.232
Packages (Small Packets): See 241.242 and 241.243

Airmail M-bags (260) — Direct Sack to One Addressee Price Group 9

Refer to Notice 123, *Price List*, for the applicable retail, commercial base, or commercial plus price.
Weight Limit: 66 lbs.

Matter for the Blind (270)
Free when sent as First-Class Mail International, including Priority Mail International Flat Rate Envelopes and Small Flat Rate Priced Boxes. Weight limit: 4 pounds.
Free when sent as Priority Mail International. Weight limit: 15 pounds.

Extra Services

Certificate of Mailing (313)

Individual Pieces	Fee
Individual article (PS Form 3817)	$1.15
Firm mailing books (PS Form 3877), per article listed (minimum 3)	0.44
Duplicate copy of PS Form 3817 or PS Form 3877 (per page)	1.15
Bulk Quantities	**Fee**
First 1,000 pieces (or fraction thereof)	$6.70
Each additional 1,000 pieces (or fraction thereof)	0.80
Duplicate copy of PS Form 3606	1.15

COD and Certified **NOT** for International Mail

International Business Reply Service (382)
Fee: Envelopes up to 2 ounces $1.50; Cards $1.00

International Postal Money Order (371)
Use MO Form MP1
Maximum Amount Available: $700 **Fee:** $4.45
Money Order Inquiry: **Fee:** $5.50

International Reply Coupons (381) **Fee:** $2.20

Registered Mail (330) **Fee:** $11.75
Maximum Indemnity: $47.33
Available for First-Class Mail International, including postcards and Flat Rate Envelopes and Small Flat Rate Priced Boxes, and matter for the blind or other physically handicapped persons. Not applicable to M-bags.

Restricted Delivery (350) **Fee:** $4.55
Available for registered mail with a return receipt.
Endorsements: A remettre en main propre.

Return Receipt (340) **Fee:** $2.35
Available for registered mail only.

Hong Kong
(Includes Kowloon)

Country Conditions for Mailing

Prohibitions (130)
Perishable infectious biological substances.
Radioactive materials.

Restrictions
Value of coins or of bullion is limited to HK$100.

Observations
Although Hong Kong is a Special Administrative Region of the People's Republic of China, senders should address their mail to Hong Kong directly.

Customs Forms Required (123)
First-Class Mail International items and Priority Mail International Flat Rate Envelopes and Small Flat Rate Priced Boxes:
PS Form 2976 (see 123.61)
Priority Mail International parcels:
PS Form 2976-A inside 2976-E (envelope)

Global Express Guaranteed (210) Price Group 3

Refer to Notice 123, *Price List*, for the applicable retail, commercial base, or commercial plus price.
Weight Limit: 70 lbs.

Insurance (212.5)

Insured Amount not over	Fee	Insured Amount not over	Fee
$100	No Fee	For document reconstruction insurance or non-document insurance coverage above $800, add $1.00 per $100 or fraction thereof, up to a maximum of $2,499 per shipment.	
200	$1.00		
300	2.00		
400	3.00		
500	4.00		
600	5.00		
700	6.00		
800	7.00	$2,499 max.	$24.00

Value Limit (212.1)
The maximum value of a GXG shipment to this country is $2,499 or a lesser amount if limited by content or value.

Size Limits (211.22)
The surface area of the address side of the item to be mailed must be large enough to completely contain the Global Express Guaranteed Air Waybill/Shipping Invoice (shipping label), postage, endorsement, and any applicable markings. The shipping label is approximately 5.5 inches high and 9.5 inches long.
Maximum length: 46 inches
Maximum width: 35 inches
Maximum height: 46 inches
Maximum length and girth combined: 108 inches

General Conditions for Mailing
See Publication 141, *Global Express Guaranteed Service Guide,* for information about areas served in the destination country, allowable contents, packaging and labeling requirements, tracking and tracing, service standards, and other conditions for mailing.

Express Mail International (220) Price Group 3

Refer to Notice 123, *Price List*, for the applicable retail, commercial base, or commercial plus price.
Weight Limit: 66 lbs.

Express Mail International — Flat Rate Envelope and Flat Rate Boxes
The maximum weight for the Express Mail International Flat Rate Envelope and the Express Mail International Flat Rate Boxes is 20 pounds. Refer to Notice 123, *Price List*, for the applicable retail, commercial base, or commercial plus price.

Insurance (222.8)
Available for **Express Mail International merchandise shipments** only

Insured Amount not over	Fee	Insured Amount not over	Fee
$100	No Fee	For insurance coverage above $2,000, add $1.50 for each $500 or fraction thereof, up to a maximum of $5,000 per shipment.	
200	$0.85		
500	2.35		
1,000	3.85		
1,500	5.35		
2,000	6.85	$5,000 max.	$15.85

Articles Admitted	Required Customs Form/Endorsement
Business correspondence, commercial papers, and documents.	No form required. Endorse item clearly next to mailing label as BUSINESS PAPERS.
Merchandise samples without commercial value.	PS Form 2976, *Customs — CN 22 and Sender's Declaration.*
Merchandise and all articles subject to customs duty.	PS Form 2976-A, *Customs Declaration and Dispatch Note CP 72*, inside a PS Form 2976-E, *Customs Declaration Envelope CP 91*.

Size Limits (221.52)
Maximum length: 60 inches
Maximum length and girth combined: 108 inches

Notes:
1. Coins; banknotes; currency notes, including paper money; securities of any kind payable to bearer; traveler's checks; platinum, gold, and silver; precious stones; jewelry; watches; and other valuable articles are prohibited in Express Mail International shipments to Hong Kong.
2. Express Mail International With Guarantee service — which offers a date-certain, postage-refund guarantee — is available to Hong Kong.

Reciprocal Service Name: Speedpost

Country Code: HK

Areas Served: All

Priority Mail International (230) Price Group 3

Refer to Notice 123, *Price List*, for the applicable retail, commercial base, or commercial plus price.
Weight Limit: 66 lbs.

Note: *Ordinary Priority Mail International includes indemnity at no cost based on weight. (See 230.)*

Priority Mail International — Flat Rate

Flat Rate Envelopes or Small Flat Rate Priced Boxes: The maximum weight is 4 pounds. Refer to Notice 123, *Price List*, for the applicable retail, commercial base, or commercial plus price.

Flat Rate Boxes — Medium and Large: The maximum weight is 20 pounds, or the limit set by the individual country, whichever is less. Refer to Notice 123, *Price List*, for the retail, commercial base, or commercial plus price.

Insurance (232.92)

Available for **Priority Mail International merchandise parcels** only (see 323.72 for markings)

Insured Amount not over	Fee	Insured Amount not over	Fee
$50	$2.45	Add $1.15 for each additional $100 or fraction of insurance coverage.	
100	3.60		
200	4.75		
300	5.90		
400	7.05		
500	8.20	$5,000 max.	$59.95

Size Limits (231.22)

Maximum length: 60 inches
Maximum length and girth combined: 108 inches

First-Class Mail International (240) Price Group 3

For the prices and maximum weights for letters, large envelopes (flats), packages (small packets), and postcards, see Notice 123, *Price List*.

Size Limits

Letters: See 241.212
Postcards: See 241.221
Large Envelopes (Flats): See 241.232
Packages (Small Packets): See 241.242 and 241.243

Airmail M-bags (260) — Direct Sack to One Addressee Price Group 3

Refer to Notice 123, *Price List*, for the applicable retail, commercial base, or commercial plus price.
Weight Limit: 66 lbs.

Matter for the Blind (270)

Free when sent as First-Class Mail International, including Priority Mail International Flat Rate Envelopes and Small Flat Rate Priced Boxes. Weight limit: 4 pounds.
Free when sent as Priority Mail International. Weight limit: 15 pounds.

Extra Services

Certificate of Mailing (313)

Individual Pieces	Fee
Individual article (PS Form 3817)	$1.15
Firm mailing books (PS Form 3877), per article listed (minimum 3)	0.44
Duplicate copy of PS Form 3817 or PS Form 3877 (per page)	1.15
Bulk Quantities	**Fee**
First 1,000 pieces (or fraction thereof)	$6.70
Each additional 1,000 pieces (or fraction thereof)	0.80
Duplicate copy of PS Form 3606	1.15

COD and Certified

NOT for International Mail

International Business Reply Service (382)

Fee: Envelopes up to 2 ounces $1.50; Cards $1.00

International Postal Money Order (371)

NOT Available

International Reply Coupons (381)

Fee: $2.20

Registered Mail (330)

Fee: $11.75

Maximum Indemnity: $47.33
Available for First-Class Mail International, including postcards and Flat Rate Envelopes and Small Flat Rate Priced Boxes, and matter for the blind or other physically handicapped persons. Not applicable to M-bags.

Restricted Delivery (350)

NOT Available

Return Receipt (340)

Fee: $2.35

Available for registered mail and insured Priority Mail International parcels only.

Hungary

Country Conditions for Mailing

Prohibitions (130)

Coins; banknotes; currency notes (paper money); securities payable to bearer; traveler's checks; platinum, gold, and silver, manufactured or not; precious stones; jewelry; and other valuable articles, unless sent in insured Priority Mail International parcels.

Radioactive materials.

Restrictions

No list furnished.

Observations

Gift shipments may be sent without import licenses provided they are for the personal use of the addressee or members of his or her family; customs duty is exempt on gift shipments not exceeding a total value of Ft 500 Hungarian Forint and on gift shipments addressed to Hungarian Red Cross.

Many articles are subject to an import license. Therefore, senders should ascertain from the addressee before mailing whether the necessary documents are held.

To expedite customs clearance, a sales invoice should accompany each shipment that is sent to a private individual from a business.

Customs Forms Required (123)

First-Class Mail International items and Priority Mail International Flat Rate Envelopes and Small Flat Rate Priced Boxes:
PS Form 2976 (see 123.61)

Priority Mail International parcels:
PS Form 2976-A inside 2976-E (envelope)

Global Express Guaranteed (210) Price Group 4

Refer to Notice 123, *Price List*, for the applicable retail, commercial base, or commercial plus price.
Weight Limit: 70 lbs.

Insurance (212.5)

Insured Amount not over	Fee	Insured Amount not over	Fee
$100	No Fee	For document reconstruction insurance or non-document insurance coverage above $800, add $1.00 per $100 or fraction thereof, up to a maximum of $2,499 per shipment.	
200	$1.00		
300	2.00		
400	3.00		
500	4.00		
600	5.00		
700	6.00		
800	7.00	$2,499 max.	$24.00

Value Limit (212.1)

The maximum value of a GXG shipment to this country is $2,499 or a lesser amount if limited by content or value.

Size Limits (211.22)

The surface area of the address side of the item to be mailed must be large enough to completely contain the Global Express Guaranteed Air Waybill/Shipping Invoice (shipping label), postage, endorsement, and any applicable markings. The shipping label is approximately 5.5 inches high and 9.5 inches long.

Maximum length: 46 inches
Maximum width: 35 inches
Maximum height: 46 inches
Maximum length and girth combined: 108 inches

General Conditions for Mailing

See Publication 141, *Global Express Guaranteed Service Guide,* for information about areas served in the destination country, allowable contents, packaging and labeling requirements, tracking and tracing, service standards, and other conditions for mailing.

Express Mail International (220) Price Group 4

Refer to Notice 123, *Price List*, for the applicable retail, commercial base, or commercial plus price.
Weight Limit: 66 lbs.

Express Mail International — Flat Rate Envelope and Flat Rate Boxes

The maximum weight for the Express Mail International Flat Rate Envelope and the Express Mail International Flat Rate Boxes is 20 pounds. Refer to Notice 123, *Price List*, for the applicable retail, commercial base, or commercial plus price.

Insurance (222.8)

Available for **Express Mail International merchandise shipments** only

Insured Amount not over	Fee	Insured Amount not over	Fee
$100	No Fee	For insurance coverage above $2,000, add $1.50 for each $500 or fraction thereof, up to a maximum of $5,000 per shipment.	
200	$0.85		
500	2.35		
1,000	3.85		
1,500	5.35		
2,000	6.85	$5,000 max.	$15.85

Articles Admitted	Required Customs Form/Endorsement
Correspondence, business papers, and computer data.	PS Form 2976, *Customs — CN 22 and Sender's Declaration.* Endorse item clearly next to mailing label as BUSINESS PAPERS.
Merchandise samples without commercial value.	PS Form 2976-A, *Customs Declaration and Dispatch Note CP 72*, inside a PS Form 2976-E, *Customs Declaration Envelope CP 91*.
Merchandise and all articles subject to customs duty.	PS Form 2976-A, *Customs Declaration and Dispatch Note CP 72*, inside a PS Form 2976-E, *Customs Declaration Envelope CP 91*.

Size Limits (221.52)

Maximum length: 36 inches
Maximum length and girth combined: 79 inches

Note:

Coins; banknotes; currency notes, including paper money; securities of any kind payable to bearer; traveler's checks; platinum, gold, and silver; precious stones; jewelry; watches; and other valuable articles are prohibited in Express Mail International shipments to Hungary.

Reciprocal Service Name: Gyorposta/EMS

Country Code: HU

Areas Served: All

Priority Mail International (230) Price Group 4

Refer to Notice 123, *Price List*, for the applicable retail, commercial base, or commercial plus price.
Weight Limit: 44 lbs.

Note: *Ordinary Priority Mail International includes indemnity at no cost based on weight. (See 230.)*

Priority Mail International — Flat Rate

Flat Rate Envelopes or Small Flat Rate Priced Boxes: The maximum weight is 4 pounds. Refer to Notice 123, *Price List*, for the applicable retail, commercial base, or commercial plus price.

Flat Rate Boxes — Medium and Large: The maximum weight is 20 pounds, or the limit set by the individual country, whichever is less. Refer to Notice 123, *Price List*, for the retail, commercial base, or commercial plus price.

Insurance (232.92)

Available for **Priority Mail International merchandise parcels** only (see 323.72 for markings)

Insured Amount not over	Fee	Insured Amount not over	Fee
$50	$2.45		
100	3.60	Add $1.15 for each additional $100 or fraction of insurance coverage.	
200	4.75		
300	5.90		
400	7.05		
500	8.20	$5,000 max.	$59.95

Size Limits (231.22)

Maximum length: 42 inches
Maximum length and girth combined: 79 inches

First-Class Mail International (240) Price Group 4

For the prices and maximum weights for letters, large envelopes (flats), packages (small packets), and postcards, see Notice 123, *Price List*.

Size Limits

Letters: See 241.212
Postcards: See 241.221
Large Envelopes (Flats): See 241.232
Packages (Small Packets): See 241.242 and 241.243

Airmail M-bags (260) — Direct Sack to One Addressee Price Group 4

Refer to Notice 123, *Price List*, for the applicable retail, commercial base, or commercial plus price.
Weight Limit: 66 lbs.

Matter for the Blind (270)

Free when sent as First-Class Mail International, including Priority Mail International Flat Rate Envelopes and Small Flat Rate Priced Boxes. Weight limit: 4 pounds.
Free when sent as Priority Mail International. Weight limit: 15 pounds.

Extra Services

Certificate of Mailing (313)

Individual Pieces	Fee
Individual article (PS Form 3817)	$1.15
Firm mailing books (PS Form 3877), per article listed (minimum 3)	0.44
Duplicate copy of PS Form 3817 or PS Form 3877 (per page)	1.15
Bulk Quantities	**Fee**
First 1,000 pieces (or fraction thereof)	$6.70
Each additional 1,000 pieces (or fraction thereof)	0.80
Duplicate copy of PS Form 3606	1.15

COD and Certified

NOT for International Mail

International Business Reply Service (382)

Fee: Envelopes up to 2 ounces $1.50; Cards $1.00

International Postal Money Order (371)

NOT Available

International Reply Coupons (381)

Fee: $2.20

Registered Mail (330)

Fee: $11.75

Maximum Indemnity: $47.33
Available for First-Class Mail International, including postcards and Flat Rate Envelopes and Small Flat Rate Priced Boxes, and matter for the blind or other physically handicapped persons. Not applicable to M-bags.

Restricted Delivery (350)

Fee: $4.55

Available for registered mail with a return receipt.
Endorsements: A remettre en main propre.
Sajat kerez'hez.

Return Receipt (340)

Fee: $2.35

Available for registered mail and insured Priority Mail International parcels only.

Iceland

Country Conditions for Mailing

Prohibitions (130)
Bees and silkworms.
Icelandic coins and banknotes, as well as any values payable in Icelandic currency.
Meat products including sausages.
Tobacco products.
Toys made of lead.
Wireless receivers and their accessories, parts, or batteries.

Restrictions
No list furnished.

Observations
All merchandise imported by mail must be accompanied by an invoice in duplicate signed by the seller in case of a sales transaction, otherwise, by the mailer. The invoice must describe the merchandise and give the selling price of each type of goods. The addressee is required to present the invoice with other documents in order to effect customs clearance.

Customs Forms Required (123)
First-Class Mail International items and Priority Mail International Flat Rate Envelopes and Small Flat Rate Priced Boxes:
PS Form 2976 (see 123.61)
Priority Mail International parcels:
PS Form 2976-A inside 2976-E (envelope)

Global Express Guaranteed (210) Price Group 5

Refer to Notice 123, *Price List*, for the applicable retail, commercial base, or commercial plus price.
Weight Limit: 70 lbs.

Insurance (212.5)

Insured Amount not over	Fee	Insured Amount not over	Fee
$100	No Fee	For document reconstruction insurance or non-document insurance coverage above $800, add $1.00 per $100 or fraction thereof, up to a maximum of $2,499 per shipment.	
200	$1.00		
300	2.00		
400	3.00		
500	4.00		
600	5.00		
700	6.00		
800	7.00	$2,499 max.	$24.00

Value Limit (212.1)
The maximum value of a GXG shipment to this country is $2,499 or a lesser amount if limited by content or value.

Size Limits (211.22)
The surface area of the address side of the item to be mailed must be large enough to completely contain the Global Express Guaranteed Air Waybill/Shipping Invoice (shipping label), postage, endorsement, and any applicable markings. The shipping label is approximately 5.5 inches high and 9.5 inches long.
Maximum length: 46 inches
Maximum width: 35 inches
Maximum height: 46 inches
Maximum length and girth combined: 108 inches

General Conditions for Mailing
See Publication 141, *Global Express Guaranteed Service Guide,* for information about areas served in the destination country, allowable contents, packaging and labeling requirements, tracking and tracing, service standards, and other conditions for mailing.

Express Mail International (220) Price Group 5

Refer to Notice 123, *Price List*, for the applicable retail, commercial base, or commercial plus price.
Weight Limit: 66 lbs.

Express Mail International — Flat Rate Envelope and Flat Rate Boxes
The maximum weight for the Express Mail International Flat Rate Envelope and the Express Mail International Flat Rate Boxes is 20 pounds. Refer to Notice 123, *Price List*, for the applicable retail, commercial base, or commercial plus price.

Insurance (222.8)
Available for **Express Mail International merchandise shipments** only

Insured Amount not over	Fee
$100	No Fee
200	$0.85
500	2.35
650 max.	3.85

Articles Admitted	Required Customs Form/Endorsement
Correspondence, business papers, and computer data.	No form required. Endorse item clearly next to mailing label as BUSINESS PAPERS.
Merchandise samples without commercial value.	PS Form 2976, *Customs — CN 22 and Sender's Declaration.*
Merchandise and all articles subject to customs duty.	PS Form 2976-A, *Customs Declaration and Dispatch Note CP 72,* inside a PS Form 2976-E, *Customs Declaration Envelope CP 91.*

Size Limits (221.52)
Maximum length: 36 inches
Maximum length and girth combined: 79 inches

Note:
Coins; banknotes; currency notes, including paper money; securities of any kind payable to bearer; traveler's checks; platinum, gold, and silver; precious stones; jewelry; watches; and other valuable articles are prohibited in Express Mail International shipments to Iceland.

Reciprocal Service Name: There is no reciprocal service.

Country Code: IS

Areas Served: All

Priority Mail International (230) Price Group 5

Refer to Notice 123, *Price List*, for the applicable retail, commercial base, or commercial plus price.
Weight Limit: 70 lbs.

Note: *Ordinary Priority Mail International includes indemnity at no cost based on weight. (See 230.)*

Priority Mail International — Flat Rate

Flat Rate Envelopes or Small Flat Rate Priced Boxes: The maximum weight is 4 pounds. Refer to Notice 123, *Price List*, for the applicable retail, commercial base, or commercial plus price.

Flat Rate Boxes — Medium and Large: The maximum weight is 20 pounds, or the limit set by the individual country, whichever is less. Refer to Notice 123, *Price List*, for the retail, commercial base, or commercial plus price.

Insurance (232.92)

Available for **Priority Mail International merchandise parcels** only (see 323.72 for markings)

Insured Amount not over	Fee
$50	$2.45
100	3.60
200	4.75
300	5.90
400	7.05
500	8.20
600	9.35
650 max.	10.50

Size Limits (231.22)

Maximum length: 42 inches
Maximum length and girth combined: 79 inches

First-Class Mail International (240) Price Group 5

For the prices and maximum weights for letters, large envelopes (flats), packages (small packets), and postcards, see Notice 123, *Price List*.

Size Limits

Letters: See 241.212
Postcards: See 241.221
Large Envelopes (Flats): See 241.232
Packages (Small Packets): See 241.242 and 241.243

Airmail M-bags (260) — Direct Sack to One Addressee Price Group 5

Refer to Notice 123, *Price List*, for the applicable retail, commercial base, or commercial plus price.
Weight Limit: 66 lbs.

Matter for the Blind (270)

Free when sent as First-Class Mail International, including Priority Mail International Flat Rate Envelopes and Small Flat Rate Priced Boxes. Weight limit: 4 pounds.
Free when sent as Priority Mail International. Weight limit: 15 pounds.

Extra Services

Certificate of Mailing (313)

Individual Pieces	Fee
Individual article (PS Form 3817)	$1.15
Firm mailing books (PS Form 3877), per article listed (minimum 3)	0.44
Duplicate copy of PS Form 3817 or PS Form 3877 (per page)	1.15
Bulk Quantities	**Fee**
First 1,000 pieces (or fraction thereof)	$6.70
Each additional 1,000 pieces (or fraction thereof)	0.80
Duplicate copy of PS Form 3606	1.15

COD and Certified

NOT for International Mail

International Business Reply Service (382)

Fee: Envelopes up to 2 ounces $1.50; Cards $1.00

International Postal Money Order (371)

NOT Available

International Reply Coupons (381)

Fee: $2.20

Registered Mail (330)

Fee: $11.75

Maximum Indemnity: $47.33
Available for First-Class Mail International, including postcards and Flat Rate Envelopes and Small Flat Rate Priced Boxes, and matter for the blind or other physically handicapped persons. Not applicable to M-bags.

Restricted Delivery (350)

Fee: $4.55

Available for registered mail with a return receipt.
Endorsements: A remettre en main propre.
Afhendist vidtananda sjalfum.

Return Receipt (340)

Fee: $2.35

Available for registered mail and insured Priority Mail International parcels only.

India

Country Conditions for Mailing

Prohibitions (130)

Appliances (including pistols, pistol pencils, etc.) for discharging gas, except on behalf of the Government.
Arms and military equipment, except for the Indian Government.
Articles of gold or silver.
Coins; banknotes; currency notes; traveler's checks; securities payable to bearer; precious stones; jewelry; and other valuable articles.
Coins or ingots exceeding 65 rupees in value, except coins obviously intended for ornament.
Consumer electronic items, (except hearing aids and life-saving equipment, apparatus, and appliances and parts thereof). Shipments containing these goods up to the value of 200 Indian rupees (gift value) are at present released after the words "Released on caution" have been stamped on the item.
Radioactive materials.

Restrictions

Addressees in India are required to obtain import licenses for all goods except those intended for their personal use and not exceeding 100 rupees in value. If the license is not obtained when required, the articles are considered as prohibited.
Commercial shipments of tobacco, manufactured or not may only be sent to licensed importers or wholesalers.
Indian banknotes, require permission of the Reserve Bank of India.
Perishable articles or edible substances are admitted only by airmail.
Piece goods and certain manufactured articles must be marked to show country of origin as prescribed by the Indian trademark regulations.
Works of art (including photographs); forms ruled or printed; account and manuscript books; labels; advertising matter (except trade catalogs and circulars); almanacs in sheets or in cards; and other cards, as well as waste paper and old newspaper for packing, are considered to be merchandise, and may be liable to customs duty.

Observations

1. In India, a very small number of articles is admitted free of customs duty and the tariffs of these duties vary considerably. The general rate of import duty is 30 percent but many articles are liable to a higher rate.
2. Import duty is chargeable even if the articles are received as free gifts. The fact that goods are old or second-hand or gifts or articles intended for personal use does not entitle them per se to exemption from import duty. However, the collection of duty is waived in cases where the total duty on a shipment does not exceed 3 rupees. Books and magazines are generally exempt from import duty.
3. Shipments can be more speedily released if their contents and value are clearly and correctly declared by the sender.
4. Insured Priority Mail International parcels addressed to the post office boxes of Draw, Kargil and Leh in the State of Kashmir are not accepted from November 1 to May 31.

Customs Forms Required (123)

First-Class Mail International items and Priority Mail International Flat Rate Envelopes and Small Flat Rate Priced Boxes:
PS Form 2976 (see 123.61)
Priority Mail International parcels:
PS Form 2976-A inside 2976-E (envelope)

Global Express Guaranteed (210) Price Group 6

Refer to Notice 123, *Price List*, for the applicable retail, commercial base, or commercial plus price.
Weight Limit: 70 lbs.

Insurance (212.5)

Insured Amount not over	Fee	Insured Amount not over	Fee
$100	No Fee	For document reconstruction insurance or non-document insurance coverage above $800, add $1.00 per $100 or fraction thereof, up to a maximum of $2,499 per shipment.	
200	$1.00		
300	2.00		
400	3.00		
500	4.00		
600	5.00		
700	6.00		
800	7.00	$2,499 max.	$24.00

Value Limit (212.1)

The maximum value of a GXG shipment to this country is $2,499 or a lesser amount if limited by content or value.

Size Limits (211.22)

The surface area of the address side of the item to be mailed must be large enough to completely contain the Global Express Guaranteed Air Waybill/Shipping Invoice (shipping label), postage, endorsement, and any applicable markings. The shipping label is approximately 5.5 inches high and 9.5 inches long.
Maximum length: 46 inches
Maximum width: 35 inches
Maximum height: 46 inches
Maximum length and girth combined: 108 inches

General Conditions for Mailing

See Publication 141, *Global Express Guaranteed Service Guide,* for information about areas served in the destination country, allowable contents, packaging and labeling requirements, tracking and tracing, service standards, and other conditions for mailing.

Express Mail International (220) Price Group 6

Refer to Notice 123, *Price List*, for the applicable retail, commercial base, or commercial plus price.
Weight Limit: 70 lbs.

Express Mail International — Flat Rate Envelope and Flat Rate Boxes

The maximum weight for the Express Mail International Flat Rate Envelope and the Express Mail International Flat Rate Boxes is 20 pounds. Refer to Notice 123, *Price List*, for the applicable retail, commercial base, or commercial plus price.

Insurance (222.8)

Available for **Express Mail International merchandise shipments** only

Insured Amount not over	Fee	Insured Amount not over	Fee
$100	No Fee	For insurance coverage above $2,000, add $1.50 for each $500 or fraction thereof, up to a maximum of $5,000 per shipment.	
200	$0.85		
500	2.35		
1,000	3.85		
1,500	5.35		
2,000	6.85	$5,000 max.	$15.85

Articles Admitted	Required Customs Form/Endorsement
Correspondence, business papers, computer data, and checks.	No form required. Endorse items clearly next to mailing label as BUSINESS PAPERS.
Merchandise samples without commercial value.	PS Form 2976-A, *Customs Declaration and Dispatch Note CP 72*, inside a PS Form 2976-E, *Customs Declaration Envelope CP 91*. Endorse item clearly next to mailing label as MERCHANDISE SAMPLES.
Merchandise and all articles subject to customs duty.	PS Form 2976-A, *Customs Declarationand Dispatch Note CP 72*, inside a PS Form 2976-E, *Customs Declaration Envelope CP 91*. Endorse item clearly next to mailing label as MERCHANDISE.

Size Limits (221.52)

Maximum length: 36 inches
Maximum length and girth combined: 79 inches

Notes:

1. Coins; banknotes; currency notes, including paper money; securities of any kind payable to bearer; traveler's checks; platinum, gold, and silver; precious stones; jewelry; watches; and other valuable articles are prohibited in Express Mail International shipments to India.
2. Import licenses and permits are required for import and export of goods in India. The addressee should obtain the required import licenses for all goods except those intended for personal use and not exceeding 100 rupees in value.

Reciprocal Service Name: International Speed Post

Country Code: IN

Areas Served:

City	Postal Code
Agartala	799001–799007
Agra	282001–282010
Ahmedabad	380001–380010, 380012–380016, 380018, 380019, 380021–380028, 380050, 382325, 382330, 382340, 382346, 382348, 382350, 382352, 382405, 382414, 382415, 382430, 382440, 382443, 382445, 382449, 382475
Allahabad	211001–211018
Alwaye	683101–683103, 683108
Bangalore	560001–560023, 560025–560034, 560038, 560040–560044, 560046, 560047, 560050–560055, 560057, 560058, 560068–560072, 560075, 560076, 560078–560082, 560084–560086
Bhopal	462001–462004, 462007, 462008, 462010, 462011, 462013, 462016, 462018, 462021–462024, 462026, 462027, 462030–460032, 462036
Bhubaneshwar	751001–751014
Bombay	400001–400022, 400024–400029, 400031–400035, 400037–400039, 400043, 400049–400052, 400054–400072, 400075–400090, 400092–400099, 400101–400104
Calcutta	700001–700034, 700037–700048, 700053–700055, 700060, 700062, 700063, 700067–700069, 700071–700073, 700075, 700078, 700082, 700085–700089, 700092
Calicut	
Chandigarh	160001–160003, 160011, 160012, 160014, 160015, 160017–160020, 160022, 160023, 160031, 160036
Cochin	682001TP–682006, 682009, 682011–682026, 682029, 682031, 682032, 682035
Coimbatore	640119, 641001–641006, 641011–641013, 641015, 641016, 641018, 641025, 641027, 641028, 641030, 641033, 641037, 631044, 641045
Cuttack	753001–753013
Delhi/New Delhi	110001–110029, 110031–110035, 110037, 110044–110046, 110048, 110049, 110051–110060, 110062–110067, 110083, 110091, 110092, 110094
Dhanbad	
Goa	403001, 403002, 403004, 403006
Gorakhpur	
Guwahati	781001, 781003–781014, 781016, 781018T, 781018–781022, 781024, 781025, 781029, 781032
Gwalior	474001–474012, 474020
Hyderabad	500001–500008, 500012, 500013, 500016–500018, 500020, 500022–500029, 500034, 500036, 500038, 500041, 500044, 500045, 500048, 500049, 500178, 500195, 500253, 500258, 500264–500267, 500361, 500371, 500380, 500457, 500463, 500482, 500484, 500486, 500659, 500873, 500890
Imphal	795001–795003, 795008, 795010
Indore	452001–452009, 452012
Jaipur	302001–302006, 302011–302013, 302015–302017
Jamm	180001–180007
Jamshedpu	
Kanchupuram	631501–631503
Kanpur	208001–208026
Lucknow	226001–226009, 226011, 226016–226020, 227105, 227132
Madras	600001–600018, 600020–600026, 600028–600036, 600038–600042, 600049, 600078, 600079, 600081–600087, 600090, 600092–600095, 600097, 600099, 600102, 600104–0600108, 600111–600113
Madurai	625001–625004, 625007–625011, 625014, 625016–625018, 625020
Mangalore	575001–575008, 575016
Meerut	250001–250004
Moradabad	
Mysore	
Nagpur	
Panaji	403001, 403002, 403004, 403006
Patna	800001–800023
Pondicherry	605001–605004, 605006, 605009, 605011–605013

Areas Served (cont'd):

Pune	411001–411014, 411016–411022, 411026–411032, 411035–411040, 411042, 411044, 411052
Quilon	
Raipu	492004, 469006–10
Ranchi	834001–834012
Salem	636001–636007, 636009, 636015, 636016
Schillong	
Shimla	171001–171006
Silchar	788001–788007, 788009
Srinagar	190001–190015
Surat	394210, 394220, 394221, 395001–395010
Tiruchirapalli	620001–620003, 620008, 620014, 620017, 620018
Tirupati	517501, 517502, 517507
Tirupur	638601–638604, 638607, 638608, 638652
Trichy	
Trichur	
Trivandrum	695001–695039, 695098
Vadodara	390001–390019
Varanasi	221001–221007, 221010
Vijayawada	520001–520016
Visakhapatnan	530001–530027, 530038, 530040

Priority Mail International (230) Price Group 6

Refer to Notice 123, *Price List*, for the applicable retail, commercial base, or commercial plus price.
Weight Limit: 44 lbs.

Note: *Ordinary Priority Mail International includes indemnity at no cost based on weight. (See 230.)*

Priority Mail International — Flat Rate

Flat Rate Envelopes or Small Flat Rate Priced Boxes: The maximum weight is 4 pounds. Refer to Notice 123, *Price List*, for the applicable retail, commercial base, or commercial plus price.

Flat Rate Boxes — Medium and Large: The maximum weight is 20 pounds, or the limit set by the individual country, whichever is less. Refer to Notice 123, *Price List*, for the retail, commercial base, or commercial plus price.

Insurance (232.92)

Available for **Priority Mail International merchandise parcels** only (see 323.72 for markings)

Insured Amount not over	Fee	Insured Amount not over	Fee
$50	$2.45		
100	3.60	Add $1.15 for each additional $100 or fraction of insurance coverage.	
200	4.75		
300	5.90		
400	7.05		
500	8.20	$2,189 max.	$27.75

Size Limits (231.22)

Maximum length: 42 inches
Maximum length and girth combined: 79 inches

First-Class Mail International (240) Price Group 6

For the prices and maximum weights for letters, large envelopes (flats), packages (small packets), and postcards, see Notice 123, *Price List*.

Size Limits

Letters: See 241.212
Postcards: See 241.221
Large Envelopes (Flats): See 241.232
Packages (Small Packets): See 241.242 and 241.243

Airmail M-bags (260) — Direct Sack to One Addressee Price Group 6

Refer to Notice 123, *Price List*, for the applicable retail, commercial base, or commercial plus price.
Weight Limit: 66 lbs.

Matter for the Blind (270)

Free when sent as First-Class Mail International, including Priority Mail International Flat Rate Envelopes and Small Flat Rate Priced Boxes. Weight limit: 4 pounds.
Free when sent as Priority Mail International. Weight limit: 15 pounds.

Extra Services

Certificate of Mailing (313)

Individual Pieces	Fee
Individual article (PS Form 3817)	$1.15
Firm mailing books (PS Form 3877), per article listed (minimum 3)	0.44
Duplicate copy of PS Form 3817 or PS Form 3877 (per page)	1.15
Bulk Quantities	**Fee**
First 1,000 pieces (or fraction thereof)	$6.70
Each additional 1,000 pieces (or fraction thereof)	0.80
Duplicate copy of PS Form 3606	1.15

COD and Certified

NOT for International Mail

International Business Reply Service (382)

Fee: Envelopes up to 2 ounces $1.50; Cards $1.00

International Postal Money Order (371)

NOT Available

International Reply Coupons (381)

Fee: $2.20

Registered Mail (330)

Fee: $11.75

Maximum Indemnity: $47.33
Available for First-Class Mail International, including postcards and Flat Rate Envelopes and Small Flat Rate Priced Boxes, and matter for the blind or other physically handicapped persons. Not applicable to M-bags.

Restricted Delivery (350)

NOT Available

Return Receipt (340)

Fee: $2.35

Available for registered mail and insured Priority Mail International parcels only.

Indonesia

Country Conditions for Mailing

Prohibitions (130)

Books and periodicals printed in any Indonesian language and published outside of Indonesia, except educational books approved by the Indonesian Department of Commerce.
Cloth and batik designs and sarongs.
Cocoa leaves, dried, undried, or powdered.
Coins; banknotes; currency notes (paper money); securities of any kind payable to bearer; traveler's checks; platinum, gold, or silver (manufactured or not); precious stones; jewelry; and other valuable articles.
Indonesian national currency (rupiahs).
Perishable infectious biological substances.
Radioactive materials.
Used articles including clothing.

Restrictions

Import licenses are required for commercial shipments. The following articles are not permitted in commercial shipments: articles of gold or silver, including tableware; pens and pencils ornamented with precious metal; calendar watches; linen clothing; natural silk goods; children's toys operated by steam or electricity; leather goods; coffee essences; and coffee substitutes; and molasses and sugar substitutes.

Observations

1. Customs declarations must show both the gross weight of the entire shipment and the net weight of each item in the shipment.
2. Addressees are required to obtain special authorization to receive gift shipments that contain any articles that are considered "luxury or semi-luxury" items (e.g., various kinds of haberdashery, technical goods, foodstuffs, office supplies, cameras and projectors) by the Indonesian authorities.
3. Gift shipments must be endorsed "Gift shipment — For the personal use of the addressee."
4. Many articles are subject to an import license or special authorization by the Indonesian authorities. Therefore, senders should ascertain from the addressee before mailing whether the necessary documents are held.

Customs Forms Required (123)

First-Class Mail International items and Priority Mail International Flat Rate Envelopes and Small Flat Rate Priced Boxes:
PS Form 2976 (see 123.61)
Priority Mail International parcels:
PS Form 2976-A inside 2976-E (envelope)

Global Express Guaranteed (210) Price Group 6

Refer to Notice 123, *Price List*, for the applicable retail, commercial base, or commercial plus price.
Weight Limit: 70 lbs.

Insurance (212.5)

Insured Amount not over	Fee	Insured Amount not over	Fee
$100	No Fee	For document reconstruction insurance or non-document insurance coverage above $800, add $1.00 per $100 or fraction thereof, up to a maximum of $2,499 per shipment.	
200	$1.00		
300	2.00		
400	3.00		
500	4.00		
600	5.00		
700	6.00		
800	7.00	$2,499 max.	$24.00

Value Limit (212.1)

The maximum value of a GXG shipment to this country is $2,499 or a lesser amount if limited by content or value.

Size Limits (211.22)

The surface area of the address side of the item to be mailed must be large enough to completely contain the Global Express Guaranteed Air Waybill/Shipping Invoice (shipping label), postage, endorsement, and any applicable markings. The shipping label is approximately 5.5 inches high and 9.5 inches long.
Maximum length: 46 inches
Maximum width: 35 inches
Maximum height: 46 inches
Maximum length and girth combined: 108 inches

General Conditions for Mailing

See Publication 141, *Global Express Guaranteed Service Guide,* for information about areas served in the destination country, allowable contents, packaging and labeling requirements, tracking and tracing, service standards, and other conditions for mailing.

Express Mail International (220) Price Group 6

Refer to Notice 123, *Price List*, for the applicable retail, commercial base, or commercial plus price.
Weight Limit: 66 lbs.

Express Mail International — Flat Rate Envelope and Flat Rate Boxes

The maximum weight for the Express Mail International Flat Rate Envelope and the Express Mail International Flat Rate Boxes is 20 pounds. Refer to Notice 123, *Price List*, for the applicable retail, commercial base, or commercial plus price.

Insurance (222.8)

Available for **Express Mail International merchandise shipments** only

Insured Amount not over	Fee	Insured Amount not over	Fee
$100	No Fee	For insurance coverage above $2,000, add $1.50 for each $500 or fraction thereof, up to a maximum of $5,000 per shipment.	
200	$0.85		
500	2.35		
1,000	3.85		
1,500	5.35		
2,000	6.85	$5,000 max.	$15.85

Articles Admitted	Required Customs Form/Endorsement
Correspondence, business papers, canceled checks, and computer cards and printouts.	No form required. Endorse items clearly next to mailing label as BUSINESS PAPERS.
Merchandise samples without commercial value, microfilm, microfiche, and magnetic tapes and disks.	PS Form 2976, *Customs — CN 22 and Sender's Declaration.*
Merchandise and all articles subject to customs duty.	PS Form 2976-A, *Customs Declaration and Dispatch Note CP 72*, inside a PS Form 2976-E, *Customs Declaration Envelope CP 91*.

Size Limits (221.52)
Maximum length: 36 inches
Maximum length and girth combined: 79 inches

Note:
Coins; banknotes; currency notes, including paper money; securities of any kind payable to bearer; traveler's checks; platinum, gold, and silver; precious stones; jewelry; watches; and other valuable articles are prohibited in Express Mail International shipments to Indonesia.

Reciprocal Service Name: Express Mail Service (EMS)

Country Code: ID

Areas Served:

Amboina	97000–97119, 97231–97239
Balikpapan	76100–76199 (in Kalimantan Island)
Banda Aceh	23000
Bandara Soekarno–Hatta	19101–19109
Bandung	40000–40199, 40201–40299
Banjarmasin	70000–70199, 70201–70299
Batam	29400–29499 (in Raiu Island)
Bekasi	17000–17199
Bengkulu	38000
Bogor	16000, 16100–16199
Bontang	75300
Bukittinggi	26100–26199
Cianjur	43200
Cibinong	16900
Cilegon	42400–42419, 42441–42449
Cimahi	40500
Ciputat	15400–15419, 15451–15459
Cirebon	45100
Denpasar	80000–80199, 80201–80299 (in Bali Island)
Depok	16400–16499
Jakarta (Djakarta)	10000–10999, 11000, 12000, 13000, 14000 (except Pulan Seribu), 19101–19109 (in Java Island)
Jambi	36000
Jayapura	99000–99119, 99221–99229
Karawang	41300
Kendari	93000
Kudus	59300
Kupang	85000–85199, 85201–85299
Lhokseumawe	24300–24399
Madiun	63100
Magelang	56100
Malang	65100–65199
Manado	95000–95199, 95201–95299 (in Sulawesi Island)
Mataram	83000
Medan	20000–20199, 20201–20299 (in Sumatra island)
Mojokerto	61300
Padang	25000–25199, 25201–25299 (in Sumatra Island)
Palembang	30000–30199, 30201–30299
Palu	94000
Pangkalpinang	33100
Pekanbaru	28000–28199, 28201–28299 (in Sumatra Island)
Pondokgede	17400–17499
Pontianak	78000–78199, 78201–78299 (in Kalimantan Island)
Purwokerto	53100
Salatiga	50700
Samarinda	75000–75199, 75201–75299
Sawangan	16500–16599
Semarang	50000–50199, 50201–50299 (in Java Island)
Serang	42100
Solo	57100–57119, 57121–57129
Sukabumi	43100
Sukoharjo	57500
Surabaya	60000–60199 (in Java Island), 60400
Tangeramg	15000–15199
Tanjungkarang	35000
Tanjungpinang	29100–29199
Tarakan	77100
Ujung Pandang	90000–90199, 90201–90299 (in Sulawesi Island)
Ungaran	50500
Yogyakarta	55000–55199, 55201–55299

Priority Mail International (230) Price Group 6

Refer to Notice 123, *Price List*, for the applicable retail, commercial base, or commercial plus price.
Weight Limit: 44 lbs.

Note: *Ordinary Priority Mail International includes indemnity at no cost based on weight. (See 230.)*

Priority Mail International — Flat Rate
Flat Rate Envelopes or Small Flat Rate Priced Boxes: The maximum weight is 4 pounds. Refer to Notice 123, *Price List*, for the applicable retail, commercial base, or commercial plus price.

Flat Rate Boxes — Medium and Large: The maximum weight is 20 pounds, or the limit set by the individual country, whichever is less. Refer to Notice 123, *Price List*, for the retail, commercial base, or commercial plus price.

Insurance (232.92) NOT Available

Size Limits (231.22)
Maximum length: 42 inches
Maximum length and girth combined: 79 inches

First-Class Mail International (240) Price Group 6
For the prices and maximum weights for letters, large envelopes (flats), packages (small packets), and postcards, see Notice 123, *Price List*.

Size Limits
Letters: See 241.212
Postcards: See 241.221
Large Envelopes (Flats): See 241.232
Packages (Small Packets): See 241.242 and 241.243

Airmail M-bags (260) — Direct Sack to One Addressee
Price Group 6

Refer to Notice 123, *Price List*, for the applicable retail, commercial base, or commercial plus price.
Weight Limit: 66 lbs.

Matter for the Blind (270)
Free when sent as First-Class Mail International, including Priority Mail International Flat Rate Envelopes and Small Flat Rate Priced Boxes. Weight limit: 4 pounds.
Free when sent as Priority Mail International. Weight limit: 15 pounds.

Extra Services

Certificate of Mailing (313)

Individual Pieces	Fee
Individual article (PS Form 3817)	$1.15
Firm mailing books (PS Form 3877), per article listed (minimum 3)	0.44
Duplicate copy of PS Form 3817 or PS Form 3877 (per page)	1.15
Bulk Quantities	**Fee**
First 1,000 pieces (or fraction thereof)	$6.70
Each additional 1,000 pieces (or fraction thereof)	0.80
Duplicate copy of PS Form 3606	1.15

COD and Certified
NOT for International Mail

International Business Reply Service (382)
Fee: Envelopes up to 2 ounces $1.50; Cards $1.00

International Postal Money Order (371)
NOT Available

International Reply Coupons (381)
Fee: $2.20

Registered Mail (330)
Fee: $11.75
Maximum Indemnity: $47.33
Available for First-Class Mail International, including postcards and Flat Rate Envelopes and Small Flat Rate Priced Boxes, and matter for the blind or other physically handicapped persons. Not applicable to M-bags.

Restricted Delivery (350)
Fee: $4.55
Available for registered mail with a return receipt.
Endorsements: A remettre en main propre.

Return Receipt (340)
Fee: $2.35
Available for registered mail only.

Iran

Country Conditions for Mailing

The Office of Foreign Assets Control (OFAC) of the U.S. Department of the Treasury administers sanctions that restrict the mailing of items to certain destinations and recipients, including a broad sanctions program against Iran. Prior to mailing any items to Iran, mailers should refer to IMM 510 or access *www.treas.gov/ofac* for additional information.

Prohibitions (130)

Alcoholic beverages.
Books, newspapers, printed matter, writing, records, pictures, emblems, and any other articles of a seditious or immoral nature or contrary to the principles of the Islamic religion or accepted customs.
Coins; banknotes; currency notes; securities payable to bearer; gold, silver, platinum, manufactured or not; jewelry, precious stones.
Fashion newspapers.
Firearms of all kinds; weapons; and ammunition.
Games involving profit and loss (for example, dice or card games).
Musical instruments.
Perishable infectious biological substances.
Perishable noninfectious biological substances.
Radio systems that are equipped with a single sideband; upper sideband; lower sideband; beat frequency oscillator; continuous air wave band; police band; or an FM band having a frequency range of 76 to 87 MHz.
Radioactive materials.
Skins of animals the consumption of whose flesh is prohibited by Islam.
Sugar, brown sugar.
Used clothing.

Restrictions

Banknotes other than Iranian may be imported only with the permission of the Iranian National Bank.

Observations

1. Customs duties will not be levied for the clearance of postal items of a non-commercial nature provided the value does not exceed $50.00. There are exceptions for those goods that are prohibited by law. More clarification is available at *www.irica.org*, the official customs website of the Islamic Republic of Iran.
2. Postage covers conveyance only to the Iranian frontier offices. Additional charges for conveyance into the interior are levied by the Iranian Administration.
3. The importation of a wide range of general merchandise is prohibited or subject to import quotas, and senders are advised in their own interests to ascertain before mailing whether their goods are admissible.
4. The importation of certain telecommunication products (wireless phones, transmitting and receiving sets, and other similar items) is subject to permission from the Ministry of Information and Communications of the Islamic Republic of Iran.
5. The importation of drugs, foods, cosmetics, hygiene products, and beverages is subject to permission from the Ministry of Health of the Islamic Republic of Iran.
6. The importation of books, publications, films, tapes, and CDs containing scientific information which are not illegal according to the laws and regulations of Iran, and other products concerning technical and scientific matters in the fields of printing, distribution and copying, which are not illegal according to the laws and regulations of Iran are subject to authorization from the Ministry of Science, Research and Technology, the Ministry of Health and Medical Education, or the Ministry of Culture and Islamic Guidance, as appropriate.
7. The importation of seeds, insecticides, etc. is subject to permission from the Ministry of Agricultural Jahad. Additional information is available at *www.maj.ir/english/Main/Default.asp*.
8. The importation of radioactive goods and equipment is subject to permission from the Atomic Energy Organization of the Islamic Republic of Iran.
9. The importation of weapons is subject to permission from the Ministry of Defense of the Islamic Republic of Iran.
10. The importation of animal foods is subject to permission from the Veterinary Organization of the Islamic Republic of Iran.

Customs Forms Required (123)

First-Class Mail International items and Priority Mail International Flat Rate Envelopes and Small Flat Rate Priced Boxes:
PS Form 2976 (see 123.61)
Priority Mail International parcels:
PS Form 2976-A inside 2976-E (envelope)

Global Express Guaranteed (210)

Not Available

Express Mail International (220)

Not Available

Priority Mail International (230) Price Group 8

Refer to Notice 123, *Price List*, for the applicable retail, commercial base, or commercial plus price.
Weight Limit: 44 lbs.

Note: *Ordinary Priority Mail International includes indemnity at no cost based on weight. (See 230.)*

Priority Mail International — Flat Rate

Flat Rate Envelopes or Small Flat Rate Priced Boxes: The maximum weight is 4 pounds. Refer to Notice 123, *Price List*, for the applicable retail, commercial base, or commercial plus price.

Flat Rate Boxes — Medium and Large: The maximum weight is 20 pounds, or the limit set by the individual country, whichever is less. Refer to Notice 123, *Price List*, for the retail, commercial base, or commercial plus price.

Insurance (232.92) NOT Available

Size Limits (231.22)

Maximum length: 42 inches
Maximum length and girth combined: 79 inches

First-Class Mail International (240) Price Group 8

For the prices and maximum weights for letters, large envelopes (flats), packages (small packets), and postcards, see Notice 123, *Price List*.

Size Limits
Letters: See 241.212
Postcards: See 241.221
Large Envelopes (Flats): See 241.232
Packages (Small Packets): See 241.242 and 241.243

Airmail M-bags (260) — Direct Sack to One Addressee
Price Group 8

Refer to Notice 123, *Price List*, for the applicable retail, commercial base, or commercial plus price.
Weight Limit: 66 lbs.

Matter for the Blind (270)
Free when sent as First-Class Mail International, including Priority Mail International Flat Rate Envelopes and Small Flat Rate Priced Boxes. Weight limit: 4 pounds.
Free when sent as Priority Mail International. Weight limit: 15 pounds.

Extra Services

Certificate of Mailing (313)

Individual Pieces	**Fee**
Individual article (PS Form 3817)	$1.15
Firm mailing books (PS Form 3877), per article listed (minimum 3)	0.44
Duplicate copy of PS Form 3817 or PS Form 3877 (per page)	1.15
Bulk Quantities	**Fee**
First 1,000 pieces (or fraction thereof)	$6.70
Each additional 1,000 pieces (or fraction thereof)	0.80
Duplicate copy of PS Form 3606	1.15

COD and Certified
NOT for International Mail

International Business Reply Service (382)
Fee: Envelopes up to 2 ounces $1.50; Cards $1.00

International Postal Money Order (371)
NOT Available

International Reply Coupons (381)
Fee: $2.20

Registered Mail (330)
Fee: $11.75
Maximum Indemnity: $47.33
Available for First-Class Mail International, including postcards and Flat Rate Envelopes and Small Flat Rate Priced Boxes, and matter for the blind or other physically handicapped persons. Not applicable to M-bags.

Restricted Delivery (350)
Fee: $4.55
Available for registered mail with a return receipt.
Endorsements: A remettre en main propre.

Return Receipt (340)
Fee: $2.35
Available for registered mail only.

Iraq

Country Conditions for Mailing

Prohibitions (130)
Arms, including air guns; and parts of arms and munitions.
Binoculars.
Cameras.
Cellular telephones.
Coins; banknotes; currency notes; securities payable to bearer; traveler's checks; gold, silver, platinum, manufactured or not; precious stones; jewelry; and other valuable articles.
Laptop computers.
Lighters containing butane gas.
Non-preserved meats and soft fruits.
Perishable infectious biological substances.
Perishable noninfectious biological substances.
Radioactive materials.
Tapes or cassettes.

Restrictions
For shipments containing goods valued at more than 1 Iraqi dinar, the addressee must obtain a special import license from the Ministry of Supply, Import Department, Baghdad.
Radio apparatus, and their accessories, and knives having blades over 76 millimeters (about 3 inches) in length, require permission to be obtained by the addressees from the Iraqi authorities.

Observations
Many articles are subject to an import permit/license. Therefore, senders should ascertain from the addressee before mailing whether the necessary documents are held.

Customs Forms Required (123)
First-Class Mail International items and Priority Mail International Flat Rate Envelopes and Small Flat Rate Priced Boxes:
PS Form 2976 (see 123.61)
Priority Mail International parcels:
PS Form 2976-A inside 2976-E (envelope)

Global Express Guaranteed (210) Price Group 6

Refer to Notice 123, *Price List*, for the applicable retail, commercial base, or commercial plus price.
Weight Limit: 70 lbs.

Insurance (212.5)

Insured Amount not over	Fee	Insured Amount not over	Fee
$100	No Fee	For document reconstruction insurance or non-document insurance coverage above $800, add $1.00 per $100 or fraction thereof, up to a maximum of $2,499 per shipment.	
200	$1.00		
300	2.00		
400	3.00		
500	4.00		
600	5.00		
700	6.00		
800	7.00	$2,499 max.	$24.00

Value Limit (212.1)
The maximum value of a GXG shipment to this country is $2,499 or a lesser amount if limited by content or value.

Size Limits (211.22)
The surface area of the address side of the item to be mailed must be large enough to completely contain the Global Express Guaranteed Air Waybill/Shipping Invoice (shipping label), postage, endorsement, and any applicable markings. The shipping label is approximately 5.5 inches high and 9.5 inches long.
Maximum length: 46 inches
Maximum width: 35 inches
Maximum height: 46 inches
Maximum length and girth combined: 108 inches

General Conditions for Mailing
See Publication 141, *Global Express Guaranteed Service Guide,* for information about areas served in the destination country, allowable contents, packaging and labeling requirements, tracking and tracing, service standards, and other conditions for mailing.

Express Mail International (220) Price Group 8

Refer to Notice 123, *Price List*, for the applicable retail, commercial base, or commercial plus price.
Weight Limit: 44 lbs.

Express Mail International — Flat Rate Envelope and Flat Rate Boxes
The maximum weight for the Express Mail International Flat Rate Envelope and the Express Mail International Flat Rate Boxes is 20 pounds. Refer to Notice 123, *Price List*, for the applicable retail, commercial base, or commercial plus price.

Insurance (222.8)
Available for **Express Mail International merchandise shipments** only

Insured Amount not over	Fee	Insured Amount not over	Fee
$100	No Fee	For insurance coverage above $2,000, add $1.50 for each $500 or fraction thereof, up to a maximum of $5,000 per shipment.	
200	$0.85		
500	2.35		
1,000	3.85		
1,500	5.35		
2,000	6.85	$5,000 max.	$15.85

Articles Admitted	Required Customs Form/Endorsement
Correspondence and business papers.	PS Form 2976, *Customs — CN 22 and Sender's Declaration.* Endorse item clearly next to mailing label as BUSINESS PAPERS.
Merchandise samples without commercial value.	PS Form 2976, *Customs — CN 22 and Sender's Declaration.*
Merchandise and all articles subject to customs duty.	PS Form 2976-A, *Customs Declaration and Dispatch Note CP 72,* inside a PS Form 2976-E, *Customs Declaration Envelope CP 91.*

Size Limits (221.52)
Maximum length: 36 inches
Maximum length and girth combined: 79 inches

Note:
Coins; banknotes; currency notes, including paper money; securities of any kind payable to bearer; traveler's checks; platinum, gold, and silver; precious stones; jewelry; watches; and other valuable articles are prohibited in Express Mail International shipments to Iraq.

Reciprocal Service Name: EMS

Country Code: IQ

Areas Served:
Express Mail International service is available to the following cities:
Baghdad
Basrah
Mosul

Priority Mail International (230) Price Group 8

Refer to Notice 123, *Price List*, for the applicable retail, commercial base, or commercial plus price.
Weight Limit: 44 lbs.

Note: *Ordinary Priority Mail International includes indemnity at no cost based on weight. (See 230.)*

Priority Mail International — Flat Rate
Flat Rate Envelopes or Small Flat Rate Priced Boxes: The maximum weight is 4 pounds. Refer to Notice 123, *Price List*, for the applicable retail, commercial base, or commercial plus price.

Flat Rate Boxes — Medium and Large: The maximum weight is 20 pounds, or the limit set by the individual country, whichever is less. Refer to Notice 123, *Price List*, for the retail, commercial base, or commercial plus price.

Insurance (232.92) NOT Available

Size Limits (231.22)
Maximum length: 42 inches
Maximum length and girth combined: 79 inches

First-Class Mail International (240) Price Group 8
For the prices and maximum weights for letters, large envelopes (flats), packages (small packets), and postcards, see Notice 123, *Price List*.

Size Limits
Letters: See 241.212
Postcards: See 241.221
Large Envelopes (Flats): See 241.232
Packages (Small Packets): See 241.242 and 241.243

Airmail M-bags (260) — Direct Sack to One Addressee Price Group 8

Refer to Notice 123, *Price List*, for the applicable retail, commercial base, or commercial plus price.
Weight Limit: 66 lbs.

Matter for the Blind (270) NOT Available

Extra Services

Certificate of Mailing (313)

Individual Pieces	Fee
Individual article (PS Form 3817)	$1.15
Firm mailing books (PS Form 3877), per article listed (minimum 3)	0.44
Duplicate copy of PS Form 3817 or PS Form 3877 (per page)	1.15
Bulk Quantities	**Fee**
First 1,000 pieces (or fraction thereof)	$6.70
Each additional 1,000 pieces (or fraction thereof)	0.80
Duplicate copy of PS Form 3606	1.15

COD and Certified **NOT** for International Mail

International Business Reply Service (382)
NOT Available

International Postal Money Order (371)
NOT Available

International Reply Coupons (381) **Fee:** $2.20

Registered Mail (330) NOT Available

Restricted Delivery (350) NOT Available

Return Receipt (340) NOT Available

Ireland
(Eire)

Country Conditions for Mailing

Prohibitions (130)
Arms and weapons.
Articles bearing false trademarks or lacking the indication of origin required by the Irish regulations.
Coins minted in a foreign country, except gold and silver; false or counterfeit coins.
Hay, straw, including articles made of straw.
Human remains.
Live plants and animals.
Peat moss litter except under license.
Prison-made goods.
Safety fuses; fireworks.
Tobacco, cigars or cigarettes packed with other articles. Cut and compressed, sweetened, or adulterated tobacco.

Restrictions
Carbon paper, except for typewriter carbon paper that must be described on the customs declaration as follows: "Typewriter carbon paper coated with wax and containing no oxidizable or fatty substances."
Circulars or advertisements relating to the prevention or treatment of venereal disease must be addressed to physicians or pharmacists.
Import licensing information is contained in the Irish Customs and Excise Tariff, which may be obtained from the Secretary, Revenue Commissioners, Dublin Castle, Dublin 2 and from the Government Publications Sales Office, GPO Arcade, Dublin 1.
Importation of tea is subject to certain customs regulations.
Many other goods, including certain fruit, vegetables and other foodstuffs, plants and seeds, and certain pharmaceutical products are subject to special regulations.
Margarine, skimmed milk, and other diluted or adulterated foodstuffs must be suitably labeled.
Oiled or varnished cloth or similar articles must be accompanied by a certificate as follows: "The oilcloth or similar articles in this parcel have been stored at a temperature of 140ºF until completely dried, and then cured for at least a month before packing." Only in Priority Mail International parcels.
The following goods are subject to quota restrictions and require an import license: boots and shoes, brushes, electric lamp bulbs, screws, tapered thread; felt hats and caps for women and girls; brushes and mops; wheaten flour and any commodity or product of wheat; rubber proofed wearing apparel; sparking plugs and component parts; silk and artificial silk hose; and certain woven fabrics.

Observations
1. A parcel may be addressed to a street address or to a post office box. A local telephone number for the addressee should be provided when the item is addressed to a street address and must be provided when the item is addressed to a post office box.
2. For Priority Mail International parcels, an invoice, in duplicate, is required for all commercial shipments regardless of value and all personal shipments valued at $300 or more. The invoices must be affixed to the outside of the parcel or may be enclosed in PS Form 2976-E with the customs declaration.
3. The names of the counties in Ireland are as follows: Carlow, Cavan, Clare, Cork, Donegal, Dublin, Galway, Kerry, Kildare, Kilkenny, Leitrim, Laioghis, Limerick, Longford, Louth, Mayo, Meath, Monaghan, Offaly, Roscommon, Sligo, Tipperary, Waterford, Westmeath, Wexford, and Wicklow.
4. The names of the county and the delivery office must form a part of the address of all mail articles.
5. In the case of articles liable to customs duty that are eligible for preference, the preferential tariff will not be applied unless the customs declaration is inscribed in bold characters: "Preference claimed — Certificate of origin enclosed." Otherwise, the full customs duties will be applied to the articles.
6. The same applies to goods imported under permit, unless the declaration is clearly marked "Imported under license," and unless the relative license is produced at the time of customs examination. In such cases the license should be produced before the goods are imported.

Customs Forms Required (123)
First-Class Mail International items and Priority Mail International Flat Rate Envelopes and Small Flat Rate Priced Boxes:
PS Form 2976 (see 123.61)
Priority Mail International parcels:
PS Form 2976-A inside 2976-E (envelope)

Global Express Guaranteed (210) Price Group 3

Refer to Notice 123, *Price List*, for the applicable retail, commercial base, or commercial plus price.
Weight Limit: 70 lbs.

Insurance (212.5)

Insured Amount not over	Fee	Insured Amount not over	Fee
$100	No Fee	For document reconstruction insurance or non-document insurance coverage above $800, add $1.00 per $100 or fraction thereof, up to a maximum of $2,499 per shipment.	
200	$1.00		
300	2.00		
400	3.00		
500	4.00		
600	5.00		
700	6.00		
800	7.00	$2,499 max.	$24.00

Value Limit (212.1)
The maximum value of a GXG shipment to this country is $2,499 or a lesser amount if limited by content or value.

Size Limits (211.22)
The surface area of the address side of the item to be mailed must be large enough to completely contain the Global Express Guaranteed Air Waybill/Shipping Invoice (shipping label), postage, endorsement, and any applicable markings. The shipping label is approximately 5.5 inches high and 9.5 inches long.
Maximum length: 46 inches
Maximum width: 35 inches
Maximum height: 46 inches
Maximum length and girth combined: 108 inches

General Conditions for Mailing
See Publication 141, *Global Express Guaranteed Service Guide,* for information about areas served in the destination country, allowable contents, packaging and labeling requirements, tracking and tracing, service standards, and other conditions for mailing.

Express Mail International (220) Price Group 5

Refer to Notice 123, *Price List*, for the applicable retail, commercial base, or commercial plus price.
Weight Limit: 66 lbs.

Express Mail International — Flat Rate Envelope and Flat Rate Boxes

The maximum weight for the Express Mail International Flat Rate Envelope and the Express Mail International Flat Rate Boxes is 20 pounds. Refer to Notice 123, *Price List*, for the applicable retail, commercial base, or commercial plus price.

Insurance (222.8)

Available for **Express Mail International merchandise shipments** only

Insured Amount not over	**Fee**
$100	No Fee
200	$0.85
500	2.35
650 max.	3.85

Articles Admitted	**Required Customs Form/Endorsement**
Business papers and documents only.	No form required. Endorse item clearly next to mailing label as BUSINESS PAPERS.
Merchandise samples without commercial value.	PS Form 2976, *Customs — CN 22 and Sender's Declaration.*
Merchandise and all articles subject to customs duty.	PS Form 2976-A, *Customs Declaration and Dispatch Note CP 72*, inside a PS Form 2976-E, *Customs Declaration Envelope CP 91.* An invoice, in duplicate, is required for all commercial shipments regardless of value and all personal shipments valued at $300 or more. The invoices must be either affixed to the outside of the parcel or enclosed in PS Form 2976-E with the customs declaration.

Size Limits (221.52)

Maximum length: 60 inches
Maximum length and girth combined: 108 inches

Notes:

1. An invoice, in duplicate, is required for all commercial shipments regardless of value and for all personal shipments valued at $300 or more. The invoices must be either affixed to the outside of the parcel or enclosed in PS Form 2976-E with the customs declaration.
2. Arms, weapons, and human remains are prohibited.
3. Coins; banknotes; currency notes, including paper money; securities of any kind payable to bearer; traveler's checks; platinum, gold, and silver; precious stones; jewelry; watches; and other valuable articles are prohibited in Express Mail International shipments to Ireland.
4. An Express Mail International shipment may be addressed to a street address or to a post office box. A local telephone number for the addressee should be provided when the item is addressed to a street address and must be provided when the item is addressed to a post office box.
5. All items must have both the county and city in the address.

Reciprocal Service Name: Express Mail

Country Code: IE

Areas Served: All

Priority Mail International (230) Price Group 5

Refer to Notice 123, *Price List*, for the applicable retail, commercial base, or commercial plus price.
Weight Limit: 66 lbs.

Note: *Ordinary Priority Mail International includes indemnity at no cost based on weight. (See 230.)*

Priority Mail International — Flat Rate

Flat Rate Envelopes or Small Flat Rate Priced Boxes: The maximum weight is 4 pounds. Refer to Notice 123, *Price List*, for the applicable retail, commercial base, or commercial plus price.

Flat Rate Boxes — Medium and Large: The maximum weight is 20 pounds, or the limit set by the individual country, whichever is less. Refer to Notice 123, *Price List*, for the retail, commercial base, or commercial plus price.

Insurance (232.92)

Available for **Priority Mail International merchandise parcels** only (see 323.72 for markings)

Insured Amount not over	**Fee**
$50	$2.45
100	3.60
200	4.75
300	5.90
400	7.05
500	8.20
600	9.35
650 max.	10.50

Size Limits (231.22)

Maximum length: 60 inches
Maximum length and girth combined: 108 inches

First-Class Mail International (240) Price Group 5

For the prices and maximum weights for letters, large envelopes (flats), packages (small packets), and postcards, see Notice 123, *Price List*.

Size Limits

Letters: See 241.212
Postcards: See 241.221
Large Envelopes (Flats): See 241.232
Packages (Small Packets): See 241.242 and 241.243

Airmail M-bags (260) — Direct Sack to One Addressee Price Group 5

Refer to Notice 123, *Price List*, for the applicable retail, commercial base, or commercial plus price.
Weight Limit: 66 lbs.

Matter for the Blind (270)

Free when sent as First-Class Mail International, including Priority Mail International Flat Rate Envelopes and Small Flat Rate Priced Boxes. Weight limit: 4 pounds.
Free when sent as Priority Mail International. Weight limit: 15 pounds.

Extra Services

Certificate of Mailing (313)

Individual Pieces	Fee
Individual article (PS Form 3817)	$1.15
Firm mailing books (PS Form 3877), per article listed (minimum 3)	0.44
Duplicate copy of PS Form 3817 or PS Form 3877 (per page)	1.15
Bulk Quantities	**Fee**
First 1,000 pieces (or fraction thereof)	$6.70
Each additional 1,000 pieces (or fraction thereof)	0.80
Duplicate copy of PS Form 3606	1.15

COD and Certified

NOT for International Mail

International Business Reply Service (382)

Fee: Envelopes up to 2 ounces $1.50; Cards $1.00

International Postal Money Order (371)

NOT Available

International Reply Coupons (381)

Fee: $2.20

Registered Mail (330)

Fee: $11.75

Maximum Indemnity: $47.33
Available for First-Class Mail International, including postcards and Flat Rate Envelopes and Small Flat Rate Priced Boxes, and matter for the blind or other physically handicapped persons. Not applicable to M-bags.

Restricted Delivery (350)

NOT Available

Return Receipt (340)

Fee: $2.35

Available for registered mail and insured Priority Mail International parcels only.

Israel

Country Conditions for Mailing

Prohibitions (130)

Agricultural tools and accessories.
Bank and currency notes at present in circulation in Israel.
Blank invoices with headings.
Cigarettes exceeding 600.
Dairy products, except for canned powdered milk.
Fresh fruits and vegetables.
Games of chance.
Indecent or obscene marks, paintings, photographs, books, cards, lithographs, or engravings.
Infectious perishable biological substances.
Live plants and seeds.
Lottery tickets and advertisements.
Meats.
Organic fertilizers.
Radioactive materials.
Seafood and fish (includes canned fish or seafood).
Soil and sand.
Spices exceeding 1 kg.
Tobacco, in various forms, exceeding 600 grams.
Used beehives.

Restrictions

Coins; banknotes; currency notes (paper money); securities payable to bearer; traveler's checks; platinum, gold or silver, manufactured or not; precious stones; jewelry; and other valuable articles may only be sent in registered First-Class Mail International shipments.

Food products not listed in the Prohibitions section may be mailed in quantities not to exceed 3 kilograms (6.6 pounds) per food item or 15 kilograms (33 pounds) per total food shipment. To import larger quantities from abroad, the prospective recipient must obtain an import license issued by the Israeli government.

Import licenses are not required for bona fide gifts, namely, all articles for the recipients' personal use provided that the import of the articles is permitted or for immigrant's personal effects.

Import licenses are required for many articles including radios, televisions and other transmitters; medical or scientific instruments; underwater equipment and cinematographic film; postal stamps exceeding 100 Israeli pounds; and plants.

Records, films, recording wire, computer cards, QSL cards, and magnetic film are admitted only if sent in First-Class Mail International shipments.

Spices may be mailed in quantities not to exceed 0.5 kilograms (1.1 pounds) per spice. To import larger quantities from abroad, the prospective recipient must obtain an import license issued by the Israeli government.

Vitamins, minerals, and food supplements may be mailed in quantities not to exceed 100 grams (3.5 ounces) or one package per product. To import larger quantities from abroad, the prospective recipient must obtain an import license issued by the Israeli government.

Observations

Invoices and documents relating to commercial items must be attached to the outside of the items or to the customs declaration and not enclosed in the item.

Customs Forms Required (123)

First-Class Mail International items and Priority Mail International Flat Rate Envelopes and Small Flat Rate Priced Boxes:
PS Form 2976 (see 123.61)

Priority Mail International parcels:
PS Form 2976-A inside 2976-E (envelope)

Global Express Guaranteed (210) Price Group 6

Refer to Notice 123, *Price List*, for the applicable retail, commercial base, or commercial plus price.
Weight Limit: 70 lbs.

Insurance (212.5)

Insured Amount not over	Fee	Insured Amount not over	Fee
$100	No Fee	For document reconstruction insurance or non-document insurance coverage above $800, add $1.00 per $100 or fraction thereof, up to a maximum of $2,499 per shipment.	
200	$1.00		
300	2.00		
400	3.00		
500	4.00		
600	5.00		
700	6.00		
800	7.00	$2,499 max.	$24.00

Value Limit (212.1)

The maximum value of a GXG shipment to this country is $2,499 or a lesser amount if limited by content or value.

Size Limits (211.22)

The surface area of the address side of the item to be mailed must be large enough to completely contain the Global Express Guaranteed Air Waybill/Shipping Invoice (shipping label), postage, endorsement, and any applicable markings. The shipping label is approximately 5.5 inches high and 9.5 inches long.

Maximum length: 46 inches
Maximum width: 35 inches
Maximum height: 46 inches
Maximum length and girth combined: 108 inches

General Conditions for Mailing

See Publication 141, *Global Express Guaranteed Service Guide,* for information about areas served in the destination country, allowable contents, packaging and labeling requirements, tracking and tracing, service standards, and other conditions for mailing.

Express Mail International (220) Price Group 8

Refer to Notice 123, *Price List*, for the applicable retail, commercial base, or commercial plus price.
Weight Limit: 44 lbs.

Express Mail International — Flat Rate Envelope and Flat Rate Boxes

The maximum weight for the Express Mail International Flat Rate Envelope and the Express Mail International Flat Rate Boxes is 20 pounds. Refer to Notice 123, *Price List*, for the applicable retail, commercial base, or commercial plus price.

Insurance (222.8)

Available for **Express Mail International merchandise shipments** only

Insured Amount not over	Fee	Insured Amount not over	Fee
$100	No Fee	For insurance coverage above $2,000, add $1.50 for each $500 or fraction thereof, up to a maximum of $5,000 per shipment.	
200	$0.85		
500	2.35		
1,000	3.85		
1,500	5.35		
2,000	6.85	$5,000 max.	$15.85

Articles Admitted	Required Customs Form/Endorsement
Business documents, business letters, non-negotiable instruments, computer printouts, and canceled checks.	No form required. Endorse item clearly next to mailing label as BUSINESS PAPERS.
Merchandise samples without commercial value, microfilm, and microfiche.	PS Form 2976, *Customs — CN 22 and Sender's Declaration.*
Merchandise, advertising materials, and all articles subject to customs duty.	PS Form 2976-A, *Customs Declaration and Dispatch Note CP 72,* inside a PS Form 2976-E, *Customs Declaration Envelope CP 91.* Identify contents completely and state whether import license, if required, is attached.

Size Limits (221.52)
Maximum length: 36 inches
Maximum length and girth combined: 79 inches

Note:
Coins; banknotes; currency notes, including paper money; securities of any kind payable to bearer; traveler's checks; platinum, gold, and silver; precious stones; jewelry; watches; and other valuable articles are prohibited in Express Mail International shipments to Israel.

Reciprocal Service Name: EMS - Express Mail Service

Country Code: IL

Areas Served: All

Priority Mail International (230) Price Group 8

Refer to Notice 123, *Price List*, for the applicable retail, commercial base, or commercial plus price.
Weight Limit: 44 lbs.

Note: *Ordinary Priority Mail International includes indemnity at no cost based on weight. (See 230.)*

Priority Mail International — Flat Rate
Flat Rate Envelopes or Small Flat Rate Priced Boxes: The maximum weight is 4 pounds. Refer to Notice 123, *Price List*, for the applicable retail, commercial base, or commercial plus price.

Flat Rate Boxes — Medium and Large: The maximum weight is 20 pounds, or the limit set by the individual country, whichever is less. Refer to Notice 123, *Price List*, for the retail, commercial base, or commercial plus price.

Insurance (232.92) NOT Available

Size Limits (231.22)
Maximum length: 42 inches
Maximum length and girth combined: 79 inches

First-Class Mail International (240) Price Group 5
For the prices and maximum weights for letters, large envelopes (flats), packages (small packets), and postcards, see Notice 123, *Price List*.

Size Limits
Letters: See 241.212
Postcards: See 241.221
Large Envelopes (Flats): See 241.232
Packages (Small Packets): See 241.242 and 241.243

Airmail M-bags (260) — Direct Sack to One Addressee Price Group 5

Refer to Notice 123, *Price List*, for the applicable retail, commercial base, or commercial plus price.
Weight Limit: 66 lbs.

Matter for the Blind (270)
Free when sent as First-Class Mail International, including Priority Mail International Flat Rate Envelopes and Small Flat Rate Priced Boxes. Weight limit: 4 pounds.
Free when sent as Priority Mail International. Weight limit: 15 pounds.

Extra Services

Certificate of Mailing (313)

Individual Pieces	Fee
Individual article (PS Form 3817)	$1.15
Firm mailing books (PS Form 3877), per article listed (minimum 3)	0.44
Duplicate copy of PS Form 3817 or PS Form 3877 (per page)	1.15
Bulk Quantities	**Fee**
First 1,000 pieces (or fraction thereof)	$6.70
Each additional 1,000 pieces (or fraction thereof)	0.80
Duplicate copy of PS Form 3606	1.15

COD and Certified **NOT** for International Mail

International Business Reply Service (382)
Fee: Envelopes up to 2 ounces $1.50; Cards $1.00

International Postal Money Order (371)
NOT Available

International Reply Coupons (381) **Fee:** $2.20

Registered Mail (330) **Fee:** $11.75
Maximum Indemnity: $47.33
Available for First-Class Mail International, including postcards and Flat Rate Envelopes and Small Flat Rate Priced Boxes, and matter for the blind or other physically handicapped persons. Not applicable to M-bags.

Restricted Delivery (350) NOT Available

Return Receipt (340) **Fee:** $2.35
Available for registered mail only.

Italy

Country Conditions for Mailing

Prohibitions (130)

Albums of any kind (of photographs, postcards, postage stamps, etc.).
Arms and weapons.
Articles of platinum or gold; jewelry; and other valuable articles unless sent as insured Priority Mail International parcels.
Artificial flowers and fruits and accessories for them.
Bells and other musical instruments and parts thereof.
Cartridge caps; cartridges.
Clocks and supplies for clocks.
Compound medicaments and medicines.
Coral mounted in any way.
Ether and chloroform.
Exposed photographic and cinematographic films.
Footwear of any kind.
Haberdashery and sewn articles of any kind, including trimmings and lace; handkerchiefs; scarves; shawls, needlework including stockings and gloves; bonnets, caps, and hats of any kind.
Hair and articles made of hair.
Human remains.
Leather goods.
Lighters and their parts, including lighter flints.
Live bees, leeches, and silkworms.
Live plants and animals.
Nutmeg, vanilla; sea salt, rock salt; saffron.
Parasites and predators of harmful insects.
Perfumery goods of all kinds (except soap).
Playing cards of any kind.
Postage stamps in sealed or unsealed First-Class Mail International shipments.
Radioactive materials.
Ribbons for typewriters.
Roasted or ground coffee and its substitutes; roasted chicory.
Saccharine and all products containing saccharine.
Salted, smoked or otherwise prepared meats; fats; and lard.
Tobacco.
Toys not made wholly of wood.
Treated skins and furs.
Weapons of any kind and spare parts for them.

Restrictions

Coins; bank notes; currency notes (paper money); traveler's checks; jewelry; and other precious or valuable articles must be enclosed in an insured Priority Mail International parcel in order to be mailable to addressees in Italy.
Postage stamps for philatelic purposes are admitted in registered First-Class Mail International shipments on condition that the package bears a completed Form 2976 and the addressee complies with the Italian financial regulations.

Observations

1. A parcel may be addressed to a street address or to a post office box. A local telephone number for the addressee should be provided when the item is addressed to a street address and must be provided when the item is addressed to a post office box.
2. For Priority Mail International parcels, an invoice, in duplicate, is required for all commercial shipments regardless of value and all personal shipments valued at $300 or more. The invoices must be affixed to the outside of the parcel or may be enclosed in PS Form 2976-E with the customs declaration.
3. First-Class Mail International shipments may not contain dutiable articles.
4. Shipments containing books must bear a PS Form 2976.
5. Many articles are subject to an import license or quantity restrictions. Senders should ascertain from the addressee before mailing whether the articles will be admitted or whether the necessary documents, if required, are held.

Customs Forms Required (123)

First-Class Mail International items and Priority Mail International Flat Rate Envelopes and Small Flat Rate Priced Boxes:
PS Form 2976 (see 123.61)
Priority Mail International parcels:
PS Form 2976-A inside 2976-E (envelope)

Global Express Guaranteed (210) Price Group 3

Refer to Notice 123, *Price List*, for the applicable retail, commercial base, or commercial plus price.
Weight Limit: 70 lbs.

Insurance (212.5)

Insured Amount not over	**Fee**	**Insured Amount** not over	**Fee**
$100	No Fee	For document reconstruction insurance or non-document insurance coverage above $800, add $1.00 per $100 or fraction thereof, up to a maximum of $2,499 per shipment.	
200	$1.00		
300	2.00		
400	3.00		
500	4.00		
600	5.00		
700	6.00		
800	7.00	$2,499 max.	$24.00

Value Limit (212.1)

The maximum value of a GXG shipment to this country is $2,499 or a lesser amount if limited by content or value.

Size Limits (211.22)

The surface area of the address side of the item to be mailed must be large enough to completely contain the Global Express Guaranteed Air Waybill/Shipping Invoice (shipping label), postage, endorsement, and any applicable markings. The shipping label is approximately 5.5 inches high and 9.5 inches long.
Maximum length: 46 inches
Maximum width: 35 inches
Maximum height: 46 inches
Maximum length and girth combined: 108 inches

General Conditions for Mailing

See Publication 141, *Global Express Guaranteed Service Guide,* for information about areas served in the destination country, allowable contents, packaging and labeling requirements, tracking and tracing, service standards, and other conditions for mailing.

Express Mail International (220) Price Group 5

Refer to Notice 123, *Price List*, for the applicable retail, commercial base, or commercial plus price.
Weight Limit: 66 lbs.

Express Mail International — Flat Rate Envelope and Flat Rate Boxes

The maximum weight for the Express Mail International Flat Rate Envelope and the Express Mail International Flat Rate Boxes is 20 pounds. Refer to Notice 123, *Price List*, for the applicable retail, commercial base, or commercial plus price.

Insurance (222.8)
Available for **Express Mail International merchandise shipments** only

Insured Amount not over	Fee
$100	No Fee
200	$0.85
500	2.35
650 max.	3.85

Articles Admitted	Required Customs Form/Endorsement
Business correspondence, commercial papers/ documents.	No form required. Endorse items clearly next to mailing label as BUSINESS PAPERS.
Merchandise samples without commercial value.	PS Form 2976, *Customs — CN 22 and Sender's Declaration.*
Merchandise and all articles subject to customs duty.	PS Form 2976-A, *Customs Declaration and Dispatch Note CP 72,* inside a PS Form 2976-E, *Customs Declaration Envelope CP 91.* An invoice, in duplicate, is required for all commercial shipments regardless of value and all personal shipments valued at $300 or more. The invoices must be either affixed to the outside of the parcel or enclosed in PS Form 2976-E with the customs declaration.

Size Limits (221.52)
Maximum length: 60 inches
Maximum length and girth combined: 108 inches

Notes:
1. An invoice, in duplicate, is required for all commercial shipments regardless of value and for all personal shipments valued at $300 or more. The invoices must be either affixed to the outside of the parcel or enclosed in PS Form 2976-E with the customs declaration.
2. Arms, weapons, and human remains are prohibited.
3. Coins; banknotes; currency notes, including paper money; securities of any kind payable to bearer; traveler's checks; platinum, gold, and silver; precious stones; jewelry; watches; and other valuable articles are prohibited in Express Mail International shipments to Italy.
4. An Express Mail International shipment may be addressed to a street address or to a post office box. A local telephone number for the addressee should be provided when the item is addressed to a street address and must be provided when the item is addressed to a post office box.

Reciprocal Service Name: CAI-Post

Country Code: IT

Areas Served: All

Priority Mail International (230) Price Group 5

Refer to Notice 123, *Price List*, for the applicable retail, commercial base, or commercial plus price.
Weight Limit: 66 lbs.

Note: *Ordinary Priority Mail International includes indemnity at no cost based on weight. (See 230.)*

Priority Mail International — Flat Rate
Flat Rate Envelopes or Small Flat Rate Priced Boxes: The maximum weight is 4 pounds. Refer to Notice 123, *Price List*, for the applicable retail, commercial base, or commercial plus price.

Flat Rate Boxes — Medium and Large: The maximum weight is 20 pounds, or the limit set by the individual country, whichever is less. Refer to Notice 123, *Price List*, for the retail, commercial base, or commercial plus price.

Insurance (232.92)
Available for **Priority Mail International merchandise parcels** only (see 323.72 for markings)

Insured Amount not over	Fee
$50	$2.45
100	3.60
200	4.75
300	5.90
400	7.05
500	8.20
600	9.35
650 max.	10.50

Size Limits (231.22)
Maximum length: 60 inches
Maximum length and girth combined: 108 inches

First-Class Mail International (240) Price Group 5
For the prices and maximum weights for letters, large envelopes (flats), packages (small packets), and postcards, see Notice 123, *Price List*.

Size Limits
Letters: See 241.212
Postcards: See 241.221
Large Envelopes (Flats): See 241.232
Packages (Small Packets): See 241.242 and 241.243

Airmail M-bags (260) — Direct Sack to One Addressee Price Group 5

Refer to Notice 123, *Price List*, for the applicable retail, commercial base, or commercial plus price.
Weight Limit: 66 lbs.

Matter for the Blind (270)
Free when sent as First-Class Mail International, including Priority Mail International Flat Rate Envelopes and Small Flat Rate Priced Boxes. Weight limit: 4 pounds.
Free when sent as Priority Mail International. Weight limit: 15 pounds.

Extra Services

Certificate of Mailing (313)

Individual Pieces	Fee
Individual article (PS Form 3817)	$1.15
Firm mailing books (PS Form 3877), per article listed (minimum 3)	0.44
Duplicate copy of PS Form 3817 or PS Form 3877 (per page)	1.15
Bulk Quantities	**Fee**
First 1,000 pieces (or fraction thereof)	$6.70
Each additional 1,000 pieces (or fraction thereof)	0.80
Duplicate copy of PS Form 3606	1.15

COD and Certified

NOT for International Mail

International Business Reply Service (382)

Fee: Envelopes up to 2 ounces $1.50; Cards $1.00

International Postal Money Order (371)

NOT Available

International Reply Coupons (381)

Fee: $2.20

Registered Mail (330)

Fee: $11.75

Maximum Indemnity: $47.33
Available for First-Class Mail International, including postcards and Flat Rate Envelopes and Small Flat Rate Priced Boxes, and matter for the blind or other physically handicapped persons. Not applicable to M-bags.

Restricted Delivery (350)

Fee: $4.55

Available for registered mail with a return receipt.
Endorsements: A remettre en main propre.

Return Receipt (340)

Fee: $2.35

Available for registered mail and insured Priority Mail International parcels only.

Jamaica

Country Conditions for Mailing

Prohibitions (130)

Bees and materials used by beekeepers.
Citrus fruits and plants and parts thereof
Cocoa; coffee; condensed milk; cornmeal; edible oils; honey and beeswax; paints; and sugar.
Cotton seed and plants and parts thereof.
Lighters containing butane gas.
Meats.
Radioactive materials.
Switchblade knives.

Restrictions

Cellular telephones are not permitted unless the phones are sent in the manufacturer's packaging.
Medications must have the name and formula printed in English on the container and wrapper. Also, medications for treatments of venereal disease must be accompanied with directions for their use.

Observations

Many types of merchandise require authorization to import, which the addressee must obtain from the Trade Administrator at Kingston. Senders must be assured that the addressee has such a permit or can obtain one if needed.

Customs Forms Required (123)

First-Class Mail International items and Priority Mail International Flat Rate Envelopes and Small Flat Rate Priced Boxes:
PS Form 2976 (see 123.61)
Priority Mail International parcels:
PS Form 2976-A inside 2976-E (envelope)

Global Express Guaranteed (210) Price Group 7

Refer to Notice 123, *Price List*, for the applicable retail, commercial base, or commercial plus price.
Weight Limit: 70 lbs.

Insurance (212.5)

Insured Amount not over	Fee	Insured Amount not over	Fee
$100	No Fee	For document reconstruction insurance or non-document insurance coverage above $800, add $1.00 per $100 or fraction thereof, up to a maximum of $2,499 per shipment.	
200	$1.00		
300	2.00		
400	3.00		
500	4.00		
600	5.00		
700	6.00		
800	7.00	$2,499 max.	$24.00

Value Limit (212.1)

The maximum value of a GXG shipment to this country is $2,499 or a lesser amount if limited by content or value.

Size Limits (211.22)

The surface area of the address side of the item to be mailed must be large enough to completely contain the Global Express Guaranteed Air Waybill/Shipping Invoice (shipping label), postage, endorsement, and any applicable markings. The shipping label is approximately 5.5 inches high and 9.5 inches long.
Maximum length: 46 inches
Maximum width: 35 inches
Maximum height: 46 inches
Maximum length and girth combined: 108 inches

General Conditions for Mailing

See Publication 141, *Global Express Guaranteed Service Guide,* for information about areas served in the destination country, allowable contents, packaging and labeling requirements, tracking and tracing, service standards, and other conditions for mailing.

Express Mail International (220) Price Group 9

Refer to Notice 123, *Price List*, for the applicable retail, commercial base, or commercial plus price.
Weight Limit: 66 lbs.

Express Mail International — Flat Rate Envelope and Flat Rate Boxes

The maximum weight for the Express Mail International Flat Rate Envelope and the Express Mail International Flat Rate Boxes is 20 pounds. Refer to Notice 123, *Price List*, for the applicable retail, commercial base, or commercial plus price.

Insurance (222.8)

Available for **Express Mail International merchandise shipments** only

Insured Amount not over	Fee	Insured Amount not over	Fee
$100	No Fee	For insurance coverage above $2,000, add $1.50 for each $500 or fraction thereof, up to a maximum of $5,000 per shipment.	
200	$0.85		
500	2.35		
1,000	3.85		
1,500	5.35		
2,000	6.85	$5,000 max.	$15.85

Articles Admitted	Required Customs Form/Endorsement
Correspondence and business papers.	PS Form 2976, *Customs — CN 22 and Sender's Declaration.* Endorse item clearly next to mailing label as BUSINESS PAPERS.
Merchandise samples without commercial value and not subject to customs duty.	PS Form 2976, *Customs — CN 22 and Sender's Declaration.*
Merchandise and all articles subject to customs duty.	PS Form 2976-A, *Customs Declaration and Dispatch Note CP 72,* inside a PS Form 2976-E, *Customs Declaration Envelope CP 91.* Two copies of a commercial invoice must be included in each item.

Size Limits (221.52)

Maximum length: 36 inches
Maximum length and girth combined: 79 inches

Note:

Coins; banknotes; currency notes, including paper money; securities of any kind payable to bearer; traveler's checks; platinum, gold, and silver; precious stones; jewelry; watches; and other valuable articles are prohibited in Express Mail International shipments to Jamaica.

Reciprocal Service Name: EMS

Country Code: JM

Areas Served: All

Priority Mail International (230) Price Group 9

Refer to Notice 123, *Price List*, for the applicable retail, commercial base, or commercial plus price.
Weight Limit: 22 lbs.

Note: *Ordinary Priority Mail International includes indemnity at no cost based on weight. (See 230.)*

Priority Mail International — Flat Rate

Flat Rate Envelopes or Small Flat Rate Priced Boxes: The maximum weight is 4 pounds. Refer to Notice 123, *Price List*, for the applicable retail, commercial base, or commercial plus price.

Flat Rate Boxes — Medium and Large: The maximum weight is 20 pounds, or the limit set by the individual country, whichever is less. Refer to Notice 123, *Price List*, for the retail, commercial base, or commercial plus price.

Insurance (232.92) NOT Available

Size Limits (231.22)

Maximum length: 42 inches
Maximum length and girth combined: 79 inches

First-Class Mail International (240) Price Group 9

For the prices and maximum weights for letters, large envelopes (flats), packages (small packets), and postcards, see Notice 123, *Price List*.

Size Limits

Letters: See 241.212
Postcards: See 241.221
Large Envelopes (Flats): See 241.232
Packages (Small Packets): See 241.242 and 241.243

Airmail M-bags (260) — Direct Sack to One Addressee Price Group 9

Refer to Notice 123, *Price List*, for the applicable retail, commercial base, or commercial plus price.
Weight Limit: 66 lbs.

Matter for the Blind (270)

Free when sent as First-Class Mail International, including Priority Mail International Flat Rate Envelopes and Small Flat Rate Priced Boxes. Weight limit: 4 pounds.
Free when sent as Priority Mail International. Weight limit: 15 pounds.

Extra Services

Certificate of Mailing (313)

Individual Pieces	Fee
Individual article (PS Form 3817)	$1.15
Firm mailing books (PS Form 3877), per article listed (minimum 3)	0.44
Duplicate copy of PS Form 3817 or PS Form 3877 (per page)	1.15
Bulk Quantities	**Fee**
First 1,000 pieces (or fraction thereof)	$6.70
Each additional 1,000 pieces (or fraction thereof)	0.80
Duplicate copy of PS Form 3606	1.15

COD and Certified **NOT** for International Mail

International Business Reply Service (382)

Fee: Envelopes up to 2 ounces $1.50; Cards $1.00

International Postal Money Order (371)

Use MO Form MP1
Maximum Amount Available: $700 **Fee:** $4.45
Money Order Inquiry: **Fee:** $5.50

International Reply Coupons (381) **Fee:** $2.20

Registered Mail (330) **Fee:** $11.75

Maximum Indemnity: $47.33
Available for First-Class Mail International, including postcards and Flat Rate Envelopes and Small Flat Rate Priced Boxes, and matter for the blind or other physically handicapped persons. Not applicable to M-bags.

Restricted Delivery (350) **Fee:** $4.55

Available for registered mail with a return receipt.
Endorsements: A remettre en main propre.
Deliver to addressee in person.

Return Receipt (340) **Fee:** $2.35

Available for registered mail only.

Japan

Country Conditions for Mailing

Prohibitions (130)

Items that infringe on patent rights, utility model rights, design rights, trademark rights, copyrights, neighboring rights, or layout design rights.

Narcotics, unless the intended recipient has received prior permission from the competent authority in the prefecture in which that person resides.

Restrictions

Banknotes; securities payable to bearer; coins, gold bullion; bills of exchange; letters of credit; and other payment orders are subject to the conditions laid down in the law concerning foreign exchange and trade control.

Coins; banknotes; currency notes (paper money); securities payable to bearer; traveler's checks; platinum, gold or silver, manufactured or not; precious stones; jewelry; and other valuable articles may only be sent in registered First-Class Mail International shipments or insured Priority Mail International parcels.

Firearms, including handguns, pistols, machine guns, and rifles; other types of weapons, including daggers, swords, spears, and switch blade knives; and the components of firearms and weapons may *not* be imported into Japan unless the intended recipient has received prior permission from the competent authority (i.e., the Public Safety Commission) in the prefecture in which that person resides.

Meat products are prohibited unless accompanied by an inspection certificate issued by the U.S. Department of Agriculture.

Observations

1. Human ashes may be accepted if presented for mailing by a licensed crematory or licensed mortuary. The ashes must be packed in a sealed metal container enclosed in a substantial outer container. There must be enclosed within the outer container, but outside the metal container, a certified copy of the death certificate and a statement or certificate executed by the crematory or mortuary to the effect that the ashes are those of the person named in the death certificate.
2. Many articles are subject to an import license. Senders should ascertain from the addressee before mailing whether the necessary documents are held. Import permits are not required for articles intended for personal use and in quantities such that they could not be used for commercial purposes; articles for the relief of disaster victims; ashes of the dead; and publications sent to libraries as part of an exchange between countries.
3. A sales invoice is required for all articles valued at more than U.S. $1,600.00. The invoice must be affixed to the outside of the parcel or may be enclosed with the customs declaration in the plastic envelope of PS Form 2976-E. The sales invoice must not obscure the customs declaration, which must show through the plastic envelope.

Customs Forms Required (123)

First-Class Mail International items and Priority Mail International Flat Rate Envelopes and Small Flat Rate Priced Boxes:
PS Form 2976 (see 123.61)

Priority Mail International parcels:
PS Form 2976-A inside 2976-E (envelope)

Global Express Guaranteed (210) Price Group 3

Refer to Notice 123, *Price List*, for the applicable retail, commercial base, or commercial plus price.
Weight Limit: 70 lbs.

Insurance (212.5)

Insured Amount not over	Fee	Insured Amount not over	Fee
$100	No Fee	For document reconstruction insurance or non-document insurance coverage above $800, add $1.00 per $100 or fraction thereof, up to a maximum of $2,499 per shipment.	
200	$1.00		
300	2.00		
400	3.00		
500	4.00		
600	5.00		
700	6.00		
800	7.00	$2,499 max.	$24.00

Value Limit (212.1)

The maximum value of a GXG shipment to this country is $2,499 or a lesser amount if limited by content or value.

Size Limits (211.22)

The surface area of the address side of the item to be mailed must be large enough to completely contain the Global Express Guaranteed Air Waybill/Shipping Invoice (shipping label), postage, endorsement, and any applicable markings. The shipping label is approximately 5.5 inches high and 9.5 inches long.

Maximum length: 46 inches
Maximum width: 35 inches
Maximum height: 46 inches
Maximum length and girth combined: 108 inches

General Conditions for Mailing

See Publication 141, *Global Express Guaranteed Service Guide,* for information about areas served in the destination country, allowable contents, packaging and labeling requirements, tracking and tracing, service standards, and other conditions for mailing.

Express Mail International (220) Price Group 12

Refer to Notice 123, *Price List*, for the applicable retail, commercial base, or commercial plus price.
Weight Limit: 66 lbs.

Express Mail International — Flat Rate Envelope and Flat Rate Boxes

The maximum weight for the Express Mail International Flat Rate Envelope and the Express Mail International Flat Rate Boxes is 20 pounds. Refer to Notice 123, *Price List*, for the applicable retail, commercial base, or commercial plus price.

Insurance (222.8)

Available for **Express Mail International merchandise shipments** only

Insured Amount not over	Fee	Insured Amount not over	Fee
$100	No Fee	For insurance coverage above $2,000, add $1.50 for each $500 or fraction thereof, up to a maximum of $5,000 per shipment.	
200	$0.85		
500	2.35		
1,000	3.85		
1,500	5.35		
2,000	6.85	$5,000 max.	$15.85

Articles Admitted	Required Customs Form/Endorsement
Correspondence, business papers, computer cards, punched paper tapes, shipping documents, and check clearances between financial institutions.	No form required. Endorse item clearly next to mailing label as BUSINESS PAPERS.
Merchandise samples not exceeding 10,000 yen in value, magnetic tapes and disks, and microfilm.	PS Form 2976, *Customs — CN 22 and Sender's Declaration.*
Merchandise or any articles subject to customs duty.	PS Form 2976-A, *Customs Declaration and Dispatch Note CP 72,* inside a PS Form 2976-E, *Customs Declaration Envelope CP 91.*

Size Limits (221.52)
Maximum length: 60 inches
Maximum length and girth combined: 108 inches

Notes:
1. Commercial shipments must be accompanied by two (2) copies of the invoice.
2. Coins; banknotes; currency notes, including paper money; securities of any kind payable to bearer; traveler's checks; platinum, gold, and silver; precious stones; jewelry; watches; and other valuable articles are prohibited in Express Mail International shipments to Japan.
3. Express Mail International With Guarantee service — which offers a date-certain, postage-refund guarantee — is available to Japan.

Reciprocal Service Name: Business Mail

Country Code: JP

Areas Served: All, including Okinawa.

Priority Mail International (230) Price Group 12

Refer to Notice 123, *Price List*, for the applicable retail, commercial base, or commercial plus price.
Weight Limit: 66 lbs.

Note: *Ordinary Priority Mail International includes indemnity at no cost based on weight. (See 230.)*

Priority Mail International — Flat Rate
Flat Rate Envelopes or Small Flat Rate Priced Boxes: The maximum weight is 4 pounds. Refer to Notice 123, *Price List*, for the applicable retail, commercial base, or commercial plus price.

Flat Rate Boxes — Medium and Large: The maximum weight is 20 pounds, or the limit set by the individual country, whichever is less. Refer to Notice 123, *Price List*, for the retail, commercial base, or commercial plus price.

Insurance (232.92)
Available for **Priority Mail International merchandise parcels** only (see 323.72 for markings)

Insured Amount not over	Fee	Insured Amount not over	Fee
$50	$2.45		
100	3.60	Add $1.15 for each additional $100 or fraction of insurance coverage.	
200	4.75		
300	5.90		
400	7.05		
500	8.20	$5,000 max.	$59.95

Size Limits (231.22)
Maximum length: 60 inches
Maximum length and girth combined: 108 inches

First-Class Mail International (240) Price Group 3
For the prices and maximum weights for letters, large envelopes (flats), packages (small packets), and postcards, see Notice 123, *Price List*.

Size Limits
Letters: See 241.212
Postcards: See 241.221
Large Envelopes (Flats): See 241.232
Packages (Small Packets): See 241.242 and 241.243

Airmail M-bags (260) — Direct Sack to One Addressee Price Group 3

Refer to Notice 123, *Price List*, for the applicable retail, commercial base, or commercial plus price.
Weight Limit: 66 lbs.

Matter for the Blind (270)
Free when sent as First-Class Mail International, including Priority Mail International Flat Rate Envelopes and Small Flat Rate Priced Boxes. Weight limit: 4 pounds.
Free when sent as Priority Mail International. Weight limit: 15 pounds.

Extra Services

Certificate of Mailing (313)

Individual Pieces	Fee
Individual article (PS Form 3817)	$1.15
Firm mailing books (PS Form 3877), per article listed (minimum 3)	0.44
Duplicate copy of PS Form 3817 or PS Form 3877 (per page)	1.15
Bulk Quantities	**Fee**
First 1,000 pieces (or fraction thereof)	$6.70
Each additional 1,000 pieces (or fraction thereof)	0.80
Duplicate copy of PS Form 3606	1.15

COD and Certified

NOT for International Mail

International Business Reply Service (382)

Fee: Envelopes up to 2 ounces $1.50; Cards $1.00

International Postal Money Order (371)

Use MO Form MP1

Maximum Amount Available: $700 **Fee:** $4.45

Money Order Inquiry: **Fee:** $5.50

International Reply Coupons (381)

Fee: $2.20

Registered Mail (330)

Fee: $11.75

Maximum Indemnity: $47.33

Available for First-Class Mail International, including postcards and Flat Rate Envelopes and Small Flat Rate Priced Boxes, and matter for the blind or other physically handicapped persons. Not applicable to M-bags.

Restricted Delivery (350)

NOT Available

Return Receipt (340)

Fee: $2.35

Available for registered mail and insured Priority Mail International parcels only.

Jordan

Country Conditions for Mailing

Prohibitions (130)

Advertisements concerning treatment of venereal diseases or medicinal preparations intended to serve as preventives against those diseases.
Arms.
Essences and oils for use in making adulterated or imitated beverages.
Perishable infectious biological substances.
Perishable noninfectious biological substances.
Radioactive materials.

Restrictions

Bees and silkworms must be accompanied by an official certificate that they are free from disease.

Observations

None

Customs Forms Required (123)

First-Class Mail International items and Priority Mail International Flat Rate Envelopes and Small Flat Rate Priced Boxes:
PS Form 2976 (see 123.61)
Priority Mail International parcels:
PS Form 2976-A inside 2976-E (envelope)

Global Express Guaranteed (210) Price Group 6

Refer to Notice 123, *Price List*, for the applicable retail, commercial base, or commercial plus price.
Weight Limit: 70 lbs.

Insurance (212.5)

Insured Amount not over	Fee	Insured Amount not over	Fee
$100	No Fee	For document reconstruction insurance or non-document insurance coverage above $800, add $1.00 per $100 or fraction thereof, up to a maximum of $2,499 per shipment.	
200	$1.00		
300	2.00		
400	3.00		
500	4.00		
600	5.00		
700	6.00		
800	7.00	$2,499 max.	$24.00

Value Limit (212.1)

The maximum value of a GXG shipment to this country is $2,499 or a lesser amount if limited by content or value.

Size Limits (211.22)

The surface area of the address side of the item to be mailed must be large enough to completely contain the Global Express Guaranteed Air Waybill/Shipping Invoice (shipping label), postage, endorsement, and any applicable markings. The shipping label is approximately 5.5 inches high and 9.5 inches long.
Maximum length: 46 inches
Maximum width: 35 inches
Maximum height: 46 inches
Maximum length and girth combined: 108 inches

General Conditions for Mailing

See Publication 141, *Global Express Guaranteed Service Guide,* for information about areas served in the destination country, allowable contents, packaging and labeling requirements, tracking and tracing, service standards, and other conditions for mailing.

Express Mail International (220) Price Group 8

Refer to Notice 123, *Price List*, for the applicable retail, commercial base, or commercial plus price.
Weight Limit: 66 lbs.

Express Mail International — Flat Rate Envelope and Flat Rate Boxes

The maximum weight for the Express Mail International Flat Rate Envelope and the Express Mail International Flat Rate Boxes is 20 pounds. Refer to Notice 123, *Price List*, for the applicable retail, commercial base, or commercial plus price.

Insurance (222.8)

Note: Express Mail International merchandise insurance is not available to this country. Document reconstruction insurance coverage is provided, at no additional cost, to a maximum of $100 per shipment. See 222.72.

Articles Admitted	Required Customs Form/Endorsement
Correspondence, business papers, checks, computer cards, magnetic tape, microfiche, and microfilm.	No form required. Endorse item clearly next to mailing label as BUSINESS PAPERS.
Merchandise samples without commercial value.	PS Form 2976, *Customs — CN 22 and Sender's Declaration.*

Size Limits (221.52)

Maximum length: 36 inches
Maximum length and girth combined: 79 inches

Notes:

1. Merchandise and all articles subject to customs duty are prohibited in Express Mail International shipments.
2. Coins; banknotes; currency notes, including paper money; securities of any kind payable to bearer; traveler's checks; platinum, gold, and silver; precious stones; jewelry; watches; and other valuable articles are prohibited in Express Mail International shipments to Jordan.

Reciprocal Service Name: Mumtaz Post

Country Code: JO

Areas Served:

Express Mail International is available ***only*** to the following locations:

Ajlun	Ma'an
Amman	Ma'daba
Aqaba	Mafraq
Irbid	Salt
Jarash	Tofeila
Karak	Zarga

Priority Mail International (230) Price Group 8

Refer to Notice 123, *Price List*, for the applicable retail, commercial base, or commercial plus price.
Weight Limit: 66 lbs.

Note: *Ordinary Priority Mail International includes indemnity at no cost based on weight. (See 230.)*

Priority Mail International — Flat Rate

Flat Rate Envelopes or Small Flat Rate Priced Boxes: The maximum weight is 4 pounds. Refer to Notice 123, *Price List*, for the applicable retail, commercial base, or commercial plus price.

Flat Rate Boxes — Medium and Large: The maximum weight is 20 pounds, or the limit set by the individual country, whichever is less. Refer to Notice 123, *Price List*, for the retail, commercial base, or commercial plus price.

Insurance (232.92) NOT Available

Size Limits (231.22)

Maximum length: 42 inches
Maximum length and girth combined: 79 inches

First-Class Mail International (240) Price Group 8

For the prices and maximum weights for letters, large envelopes (flats), packages (small packets), and postcards, see Notice 123, *Price List*.

Size Limits

Letters: See 241.212
Postcards: See 241.221
Large Envelopes (Flats): See 241.232
Packages (Small Packets): See 241.242 and 241.243

Airmail M-bags (260) — Direct Sack to One Addressee Price Group 8

Refer to Notice 123, *Price List*, for the applicable retail, commercial base, or commercial plus price.
Weight Limit: 66 lbs.

Matter for the Blind (270)

Free when sent as First-Class Mail International, including Priority Mail International Flat Rate Envelopes and Small Flat Rate Priced Boxes. Weight limit: 4 pounds.
Free when sent as Priority Mail International. Weight limit: 15 pounds.

Extra Services

Certificate of Mailing (313)

Individual Pieces	**Fee**
Individual article (PS Form 3817)	$1.15
Firm mailing books (PS Form 3877), per article listed (minimum 3)	0.44
Duplicate copy of PS Form 3817 or PS Form 3877 (per page)	1.15
Bulk Quantities	**Fee**
First 1,000 pieces (or fraction thereof)	$6.70
Each additional 1,000 pieces (or fraction thereof)	0.80
Duplicate copy of PS Form 3606	1.15

COD and Certified **NOT** for International Mail

International Business Reply Service (382)

Fee: Envelopes up to 2 ounces $1.50; Cards $1.00

International Postal Money Order (371)

NOT Available

International Reply Coupons (381) **Fee:** $2.20

Registered Mail (330) **Fee:** $11.75

Maximum Indemnity: $47.33
Available for First-Class Mail International, including postcards and Flat Rate Envelopes and Small Flat Rate Priced Boxes, and matter for the blind or other physically handicapped persons. Not applicable to M-bags.

Restricted Delivery (350) NOT Available

Return Receipt (340) **Fee:** $2.35

Available for registered mail only.

Kazakhstan

Country Conditions for Mailing

Prohibitions (130)

Coins, banknotes, credit notes or any securities payable to bearer, checks, precious metals (whether manufactured or not), precious stones, natural diamonds, jewels and other valuable articles, and foreign currency are prohibited. Kazakhstan will accept no liability for loss of or damage to such items.
Cultural artifacts.
Deer horns, hooves, and antlers.
Explosives and explosive or inflammable substances, pyrotechnic articles (fireworks, etc.).
Firearms and bladed weapons or articles of similar construction for civilian service, ammunition, special dual purpose (civilian and military) technical devices, and parts and accessories thereof.
Foreign currency.
Human organs and/or substances, and blood and blood parts.
Implements for fishing aquatic biological resources.
Live animals except bees, leeches, and silkworms.
Military weapons.
Narcotics, psychotropic substances, and precursors, including in drug form.
Natural precious stones, waste thereof, powder from precious stones, pearls, yellow amber.
Nuclear materials and equipment; radioactive materials, fuels and corrosive materials.
Originals and copies of military service records, identity cards, and passports.
Perishable foodstuffs.
Perishable infectious biological substances.
Perishable noninfectious biological substances.
Plant protection products subject to the provisions of Annexes A and B to the Stockholm Convention on Persistent Organic Pollutants of May 22, 2001.
Plants of any kind and in any form, including seeds.
Poisons, toxic substances of animal origin.
Precious metals, alloys, minerals, concentrates, rubble and waste from precious metals.
Printed matter, plastic materials, stock footage, photographic material, audio and video material containing propaganda against the political regime and liable to threaten the integrity and security of the State or aimed at undermining its authority, materials that promote war, cruelty, violence and pornography, and materials that promote social, racial, national, religious, genetic or caste superiority.
Rare animal and vegetable products and endangered animals and plants.
Rare metals, raw materials, alloys, combinations and products.
Special technical publications on the covert reception of intelligence.
Sturgeon and salmon caviar.
Substances harmful to the ozone layer.
Tobacco products and smoking mixtures of all kinds.

Restrictions

A certificate must accompany funeral urns containing ashes of the deceased from the licensed crematory or licensed mortuary stating that the ashes are those of the person named in the death certificate.
Animals and products of animal origin are subject to authorization from the veterinary control institutions of Kazakhstan.
Articles subject to customs duty may not be sent in ordinary or registered First-Class Mail International items, including the Priority Mail International Flat Rate Envelope and Small Flat Rate Priced Boxes.
Radio-electronic and high-frequency equipment requires authorization by the country's Ministry of Transport and Communications.
Recording media (diskettes, video, and audio) require that information be supplied on the type of computer and operating system used for recording.
Works of art, antiques, and other valuable objects of art, history, science, or culture require authorization by the country's Ministry of Public Health, Education and Culture.

Observations

Postal items mailed to Kazakhstan by private individuals are *exempt* from the payment of customs duty provided that (a) they do *not* contain goods that are intended for commercial or manufacturing purposes; (b) their weight does *not* exceed 70 pounds; and (c) their value does *not* exceed U.S. $1,000.

Customs Forms Required (123)

First-Class Mail International items and Priority Mail International Flat Rate Envelopes and Small Flat Rate Priced Boxes:
PS Form 2976 (see 123.61)
Priority Mail International parcels:
PS Form 2976-A inside 2976-E (envelope)

Global Express Guaranteed (210) Price Group 4

Refer to Notice 123, *Price List*, for the applicable retail, commercial base, or commercial plus price.
Weight Limit: 70 lbs.

Insurance (212.5)

Insured Amount not over	**Fee**	**Insured Amount** not over	**Fee**
$100	No Fee	For document reconstruction insurance or non-document insurance coverage above $800, add $1.00 per $100 or fraction thereof, up to a maximum of $2,499 per shipment.	
200	$1.00		
300	2.00		
400	3.00		
500	4.00		
600	5.00		
700	6.00		
800	7.00	$2,499 max.	$24.00

Value Limit (212.1)

The maximum value of a GXG shipment to this country is $2,499 or a lesser amount if limited by content or value.

Size Limits (211.22)

The surface area of the address side of the item to be mailed must be large enough to completely contain the Global Express Guaranteed Air Waybill/Shipping Invoice (shipping label), postage, endorsement, and any applicable markings. The shipping label is approximately 5.5 inches high and 9.5 inches long.
Maximum length: 46 inches
Maximum width: 35 inches
Maximum height: 46 inches
Maximum length and girth combined: 108 inches

General Conditions for Mailing

See Publication 141, *Global Express Guaranteed Service Guide,* for information about areas served in the destination country, allowable contents, packaging and labeling requirements, tracking and tracing, service standards, and other conditions for mailing.

Express Mail International (220) Price Group 6

Refer to Notice 123, *Price List*, for the applicable retail, commercial base, or commercial plus price.
Weight Limit: 66 lbs.

Express Mail International — Flat Rate Envelope and Flat Rate Boxes

The maximum weight for the Express Mail International Flat Rate Envelope and the Express Mail International Flat Rate Boxes is 20 pounds. Refer to Notice 123, *Price List*, for the applicable retail, commercial base, or commercial plus price.

Insurance (222.8)

Available for **Express Mail International merchandise shipments** only

Insured Amount not over	Fee	Insured Amount not over	Fee
$100	No Fee	For insurance coverage above $2,000, add $1.50 for each $500 or fraction thereof, up to a maximum of $5,000 per shipment.	
200	$0.85		
500	2.35		
1,000	3.85		
1,500	5.35		
2,000	6.85	$5,000 max.	$15.85

Articles Admitted	Required Customs Form/Endorsement
Correspondence, business papers, and documents.	PS Form 2976, *Customs — CN 22 and Sender's Declaration.* Endorse item clearly next to mailing label as BUSINESS PAPERS.
Merchandise samples without commercial value.	PS Form 2976-A, *Customs Declaration and Dispatch Note CP 72,* inside a PS Form 2976-E, *Customs Declaration Envelope CP 91.*
Merchandise and all articles subject to customs duty.	PS Form 2976-A, *Customs Declaration and Dispatch Note CP 72,* inside a PS Form 2976-E, *Customs Declaration Envelope CP 91.*

Size Limits (221.52)

Maximum length: 36 inches
Maximum length and girth combined: 79 inches

Notes:

1. Addressees are required to obtain import licenses/permits to receive most goods.
2. Coins; banknotes; currency notes, including paper money; securities of any kind payable to bearer; traveler's checks; platinum, gold, and silver; precious stones; jewelry; watches; and other valuable articles are prohibited in Express Mail International shipments to Kazakhstan.

Reciprocal Service Name: EMS

Country Code: KZ

Areas Served: All

Priority Mail International (230) Price Group 6

Refer to Notice 123, *Price List*, for the applicable retail, commercial base, or commercial plus price.
Weight Limit: 44 lbs.

Note: *Ordinary Priority Mail International includes indemnity at no cost based on weight. (See 230.)*

Priority Mail International — Flat Rate

Flat Rate Envelopes or Small Flat Rate Priced Boxes: The maximum weight is 4 pounds. Refer to Notice 123, *Price List*, for the applicable retail, commercial base, or commercial plus price.

Flat Rate Boxes — Medium and Large: The maximum weight is 20 pounds, or the limit set by the individual country, whichever is less. Refer to Notice 123, *Price List*, for the retail, commercial base, or commercial plus price.

Insurance (232.92)

Available for **Priority Mail International merchandise parcels** only (see 323.72 for markings)

Insured Amount not over	Fee	Insured Amount not over	Fee
$50	$2.45		
100	3.60	Add $1.15 for each additional $100 or fraction of insurance coverage.	
200	4.75		
300	5.90		
400	7.05		
500	8.20	$5,000 max.	$59.95

Size Limits (231.22)

Maximum length: 42 inches
Maximum length and girth combined: 79 inches

First-Class Mail International (240) Price Group 6

For the prices and maximum weights for letters, large envelopes (flats), packages (small packets), and postcards, see Notice 123, *Price List*.

Size Limits

Letters: See 241.212
Postcards: See 241.221
Large Envelopes (Flats): See 241.232
Packages (Small Packets): See 241.242 and 241.243

Airmail M-bags (260) — Direct Sack to One Addressee Price Group 6

Refer to Notice 123, *Price List*, for the applicable retail, commercial base, or commercial plus price.
Weight Limit: 44 lbs.

Matter for the Blind (270)

Free when sent as First-Class Mail International, including Priority Mail International Flat Rate Envelopes and Small Flat Rate Priced Boxes. Weight limit: 4 pounds.
Free when sent as Priority Mail International. Weight limit: 15 pounds.

Extra Services

Certificate of Mailing (313)

Individual Pieces	Fee
Individual article (PS Form 3817)	$1.15
Firm mailing books (PS Form 3877), per article listed (minimum 3)	0.44
Duplicate copy of PS Form 3817 or PS Form 3877 (per page)	1.15
Bulk Quantities	**Fee**
First 1,000 pieces (or fraction thereof)	$6.70
Each additional 1,000 pieces (or fraction thereof)	0.80
Duplicate copy of PS Form 3606	1.15

COD and Certified **NOT** for International Mail

International Business Reply Service (382)
Fee: Envelopes up to 2 ounces $1.50; Cards $1.00

International Postal Money Order (371)
NOT Available

International Reply Coupons (381) **Fee:** $2.20

Registered Mail (330) **Fee:** $11.75
Maximum Indemnity: $47.33
Available for First-Class Mail International, including postcards and Flat Rate Envelopes and Small Flat Rate Priced Boxes, and matter for the blind or other physically handicapped persons. Not applicable to M-bags.

Restricted Delivery (350) **Fee:** $4.55
Available for registered mail with a return receipt.
Endorsements: A remettre en main propre.

Return Receipt (340) **Fee:** $2.35
Available for registered mail and insured Priority Mail International parcels only.

Kenya

Country Conditions for Mailing

Prohibitions (130)

Coins; banknotes; currency notes (paper money); traveler's checks; platinum, gold, or silver (manufactured or not); precious stones; jewelry; and other valuables.
Firearms and articles resembling deadly weapons.
Radioactive materials.
Used clothing, bedding and other similar items, textile and fabrics.

Restrictions

Articles bearing Boy Scout or Girl Scout insignia must have authorization of the Kenya Boy Scout or Girl Guide Commissioner.
Military or civil uniforms and clothing resembling them require permit of the Kenya government.
Restrictions apply to the importation of second-hand clothes for sale. This restriction does not apply to personal effects.
Traps capable of killing or capturing game must have permission of the Chief Game Warden of Kenya.

Observations

A plant import permit must be obtained prior to shipment to Kenya from the Kenyan Ministry of Agriculture at the following address: The Director, National Plant Quarantine Station, P.O. Box 30148, Nairobi, Kenya.
Many types of merchandise require authorization to import, which the addressee must obtain from the Director of Trade and Supplies, P.O. Box 30430, Nairobi, Kenya. Senders should be assured that the addressee has such a permit or can obtain one if needed.

Customs Forms Required (123)

First-Class Mail International items and Priority Mail International Flat Rate Envelopes and Small Flat Rate Priced Boxes:
PS Form 2976 (see 123.61)
Priority Mail International parcels:
PS Form 2976-A inside 2976-E (envelope)

Global Express Guaranteed (210) Price Group 4

Refer to Notice 123, *Price List*, for the applicable retail, commercial base, or commercial plus price.
Weight Limit: 70 lbs.

Insurance (212.5)

Insured Amount not over	Fee	Insured Amount not over	Fee
$100	No Fee	For document reconstruction insurance or non-document insurance coverage above $800, add $1.00 per $100 or fraction thereof, up to a maximum of $2,499 per shipment.	
200	$1.00		
300	2.00		
400	3.00		
500	4.00		
600	5.00		
700	6.00		
800	7.00	$2,499 max.	$24.00

Value Limit (212.1)

The maximum value of a GXG shipment to this country is $2,499 or a lesser amount if limited by content or value.

Size Limits (211.22)

The surface area of the address side of the item to be mailed must be large enough to completely contain the Global Express Guaranteed Air Waybill/Shipping Invoice (shipping label), postage, endorsement, and any applicable markings. The shipping label is approximately 5.5 inches high and 9.5 inches long.
Maximum length: 46 inches
Maximum width: 35 inches
Maximum height: 46 inches
Maximum length and girth combined: 108 inches

General Conditions for Mailing

See Publication 141, *Global Express Guaranteed Service Guide,* for information about areas served in the destination country, allowable contents, packaging and labeling requirements, tracking and tracing, service standards, and other conditions for mailing.

Express Mail International (220) Price Group 7

Refer to Notice 123, *Price List*, for the applicable retail, commercial base, or commercial plus price.
Weight Limit: 70 lbs.

Express Mail International — Flat Rate Envelope and Flat Rate Boxes

The maximum weight for the Express Mail International Flat Rate Envelope and the Express Mail International Flat Rate Boxes is 20 pounds. Refer to Notice 123, *Price List*, for the applicable retail, commercial base, or commercial plus price.

Insurance (222.8)

Available for **Express Mail International merchandise shipments** only

Insured Amount not over	Fee	Insured Amount not over	Fee
$100	No Fee	For insurance coverage above $2,000, add $1.50 for each $500 or fraction thereof, up to a maximum of $5,000 per shipment.	
200	$0.85		
500	2.35		
1,000	3.85		
1,500	5.35		
2,000	6.85	$5,000 max.	$15.85

Articles Admitted	Required Customs Form/Endorsement
Correspondence and business papers.	PS Form 2976, *Customs — CN 22 and Sender's Declaration.* Endorse item clearly next to mailing label as DOCUMENTS WITHOUT COMMERCIAL VALUE.
Merchandise samples without commercial value.	PS Form 2976, *Customs — CN 22 and Sender's Declaration.*
Merchandise and all articles subject to customs duty.	PS Form 2976-A, *Customs Declaration and Dispatch Note CP 72,* inside a PS Form 2976-E, *Customs Declaration Envelope CP 91.* A commercial invoice must be enclosed in each item.

Size Limits (221.52)

Maximum length: 36 inches
Maximum length and girth combined: 79 inches

Notes:

1. Coins; banknotes; currency notes, including paper money; securities of any kind payable to bearer; traveler's checks; platinum, gold, and silver; precious stones; jewelry; watches; and other valuable articles are prohibited in Express Mail International shipments to Kenya.
2. Express Mail International shipments to Kenya must carry a complete street delivery (including the name of the building and floor number) or post office box address.

Reciprocal Service Name: Speedpost

Country Code: KE

Areas Served:

Bamburi	Keroka	Nandi Hills
Basement	Kerugoya	Nanyuki
Bungoma	Khayega	Naro Moru
Busia	Kigano	Ngara RD
Changamwe	Kilifi	Nkubu
Chepbar	Kilindini RD	Nyahururu
Chogoria	Kisii	Nyansiongo
Chuka	Kisumu	Nyeri
City Square	Kitale	Othaya
Eldoret	Kitui	Ronald Ngala ST
Embu	Lamu	Sarit Center
Enterprise RD	Letracets	Slaya
Gakere Road	Machakos	Sotik
Garissa	Malindi	Teletrade
Gigiri	Maragoli	Thika
Gilgil	Marua	Ukunda
Homabay	Meru	Voi
Isiolo	Mombasa	Watalii RD
Iten	Mukurweini	Watamu
Kabarnet	Mumias	Webuye
Kakamega	Muranga	Wundanyi
Kapsabet	Nairobi G.P.O.	Yaya Centre
Karatina	Naivasha	
Kericho	Nakuru	

Priority Mail International (230) Price Group 7

Refer to Notice 123, *Price List*, for the applicable retail, commercial base, or commercial plus price.
Weight Limit: 70 lbs.

Note: *Ordinary Priority Mail International includes indemnity at no cost based on weight. (See 230.)*

Priority Mail International — Flat Rate

Flat Rate Envelopes or Small Flat Rate Priced Boxes: The maximum weight is 4 pounds. Refer to Notice 123, *Price List*, for the applicable retail, commercial base, or commercial plus price.

Flat Rate Boxes — Medium and Large: The maximum weight is 20 pounds, or the limit set by the individual country, whichever is less. Refer to Notice 123, *Price List*, for the retail, commercial base, or commercial plus price.

Insurance (232.92)

Available for **Priority Mail International merchandise parcels** only (see 323.72 for markings)

Insured Amount not over	Fee
$50	$2.45
100	3.60
131 max.	4.75

Size Limits (231.22)

Maximum length: 42 inches
Maximum length and girth combined: 79 inches

First-Class Mail International (240) Price Group 7

For the prices and maximum weights for letters, large envelopes (flats), packages (small packets), and postcards, see Notice 123, *Price List*.

Size Limits

Letters: See 241.212
Postcards: See 241.221
Large Envelopes (Flats): See 241.232
Packages (Small Packets): See 241.242 and 241.243

Airmail M-bags (260) — Direct Sack to One Addressee Price Group 7

Refer to Notice 123, *Price List*, for the applicable retail, commercial base, or commercial plus price.
Weight Limit: 66 lbs.

Matter for the Blind (270)

Free when sent as First-Class Mail International, including Priority Mail International Flat Rate Envelopes and Small Flat Rate Priced Boxes. Weight limit: 4 pounds.
Free when sent as Priority Mail International. Weight limit: 15 pounds.

Extra Services

Certificate of Mailing (313)

Individual Pieces	Fee
Individual article (PS Form 3817)	$1.15
Firm mailing books (PS Form 3877), per article listed (minimum 3)	0.44
Duplicate copy of PS Form 3817 or PS Form 3877 (per page)	1.15
Bulk Quantities	**Fee**
First 1,000 pieces (or fraction thereof)	$6.70
Each additional 1,000 pieces (or fraction thereof)	0.80
Duplicate copy of PS Form 3606	1.15

COD and Certified **NOT** for International Mail

International Business Reply Service (382)

Fee: Envelopes up to 2 ounces $1.50; Cards $1.00

International Postal Money Order (371)

NOT Available

International Reply Coupons (381) **Fee:** $2.20

Registered Mail (330) **Fee:** $11.75

Maximum Indemnity: $47.33
Available for First-Class Mail International, including postcards and Flat Rate Envelopes and Small Flat Rate Priced Boxes, and matter for the blind or other physically handicapped persons. Not applicable to M-bags.

Restricted Delivery (350) NOT Available

Return Receipt (340) **Fee:** $2.35

Available for registered mail and insured Priority Mail International parcels only.

Kiribati

Country Conditions for Mailing

Prohibitions (130)
Dyestuffs obtained from coal tar.

Restrictions
No list furnished.

Observations
Many categories of goods are either completely prohibited or admitted only under special permit. Senders are advised not to dispatch goods until they are sure that the importer possesses or is able to obtain the necessary license issued by the Resident Commissioner, Tarawa, Kiribati, or that no such license is required.

Customs Forms Required (123)
First-Class Mail International items and Priority Mail International Flat Rate Envelopes and Small Flat Rate Priced Boxes:
PS Form 2976 (see 123.61)
Priority Mail International parcels:
PS Form 2976-A inside 2976-E (envelope)

Global Express Guaranteed (210)
Not Available

Express Mail International (220)
Not Available

Priority Mail International (230) Price Group 6

Refer to Notice 123, *Price List*, for the applicable retail, commercial base, or commercial plus price.
Weight Limit: 44 lbs.

Note: *Ordinary Priority Mail International includes indemnity at no cost based on weight. (See 230.)*

Priority Mail International — Flat Rate
Flat Rate Envelopes or Small Flat Rate Priced Boxes: The maximum weight is 4 pounds. Refer to Notice 123, *Price List*, for the applicable retail, commercial base, or commercial plus price.

Flat Rate Boxes — Medium and Large: The maximum weight is 20 pounds, or the limit set by the individual country, whichever is less. Refer to Notice 123, *Price List*, for the retail, commercial base, or commercial plus price.

Insurance (232.92) NOT Available

Size Limits (231.22)
Maximum length: 42 inches
Maximum length and girth combined: 79 inches

First-Class Mail International (240) Price Group 6
For the prices and maximum weights for letters, large envelopes (flats), packages (small packets), and postcards, see Notice 123, *Price List*.

Size Limits
Letters: See 241.212
Postcards: See 241.221
Large Envelopes (Flats): See 241.232
Packages (Small Packets): See 241.242 and 241.243

Airmail M-bags (260) — Direct Sack to One Addressee Price Group 6

Refer to Notice 123, *Price List*, for the applicable retail, commercial base, or commercial plus price.
Weight Limit: 66 lbs.

Matter for the Blind (270)
Free when sent as First-Class Mail International, including Priority Mail International Flat Rate Envelopes and Small Flat Rate Priced Boxes. Weight limit: 4 pounds.
Free when sent as Priority Mail International. Weight limit: 15 pounds.

Extra Services

Certificate of Mailing (313)

Individual Pieces	Fee
Individual article (PS Form 3817)	$1.15
Firm mailing books (PS Form 3877), per article listed (minimum 3)	0.44
Duplicate copy of PS Form 3817 or PS Form 3877 (per page)	1.15
Bulk Quantities	**Fee**
First 1,000 pieces (or fraction thereof)	$6.70
Each additional 1,000 pieces (or fraction thereof)	0.80
Duplicate copy of PS Form 3606	1.15

COD and Certified **NOT** for International Mail

International Business Reply Service (382)
Fee: Envelopes up to 2 ounces $1.50; Cards $1.00

International Postal Money Order (371)
NOT Available

International Reply Coupons (381) **Fee:** $2.20

Registered Mail (330) **Fee:** $11.75
Maximum Indemnity: $47.33
Available for First-Class Mail International, including postcards and Flat Rate Envelopes and Small Flat Rate Priced Boxes, and matter for the blind or other physically handicapped persons. Not applicable to M-bags.

Restricted Delivery (350) NOT Available

Return Receipt (340) **Fee:** $2.35
Available for registered mail only.

Korea, Democratic People's Republic of (North Korea)

Country Conditions for Mailing

The Office of Foreign Assets Control (OFAC) of the U.S. Department of the Treasury administers sanctions that restrict the mailing of items to certain destinations and recipients, including a broad sanctions program against North Korea. Prior to mailing any items to North Korea, mailers should refer to IMM 510 or access *www.treas.gov/ofac* for additional information.

Service is limited to First-Class Mail International items, including postcards and matter for the blind. All merchandise is prohibited.

Prohibitions (130)

All merchandise is prohibited.
Coins; banknotes; currency notes (paper money); securities payable to bearer; traveler's checks; platinum, gold or silver, manufactured or not; precious stones; jewelry; and other precious articles.
Perishable infectious biological substances.
Radioactive materials.

Restrictions

No list furnished.

Observations

1. First-Class Mail International items, including Priority Mail International Flat Rate Envelopes, may not contain dutiable articles.
2. Mail should be addressed to Democratic People's Republic of Korea.

Customs Forms Required (123)

First-Class Mail International items and Priority Mail International Flat Rate Envelopes:
PS Form 2976 (see 123.61)

Global Express Guaranteed (210)

Not Available

Express Mail International (220)

Not Available

Priority Mail International (230) Price Group 6

Available only for Priority Mail International Flat Rate Envelope.

Flat Rate Envelopes: May not contain dutiable items or merchandise. The maximum weight is 4 pounds. Refer to Notice 123, *Price List*, for the applicable retail, commercial base, or commercial plus price.

Insurance (232.92) NOT Available

First-Class Mail International (240) Price Group 6

For the prices and maximum weights for letters, large envelopes (flats), packages (small packets), and postcards, see Notice 123, *Price List*.

Size Limits

Letters: See 241.212
Postcards: See 241.221
Large Envelopes (Flats): See 241.232
Packages (Small Packets): See 241.242 and 241.243

Airmail M-bags (260) — Direct Sack to One Addressee Price Group 6

Refer to Notice 123, *Price List*, for the applicable retail, commercial base, or commercial plus price.
Weight Limit: 66 lbs.

Matter for the Blind (270)

Free when sent as First-Class Mail International, including Priority Mail International Flat Rate Envelopes and Small Flat Rate Priced Boxes. Weight limit: 4 pounds.
Free when sent as Priority Mail International. Weight limit: 15 pounds.

Extra Services

Certificate of Mailing (313)

Individual Pieces	Fee
Individual article (PS Form 3817)	$1.15
Firm mailing books (PS Form 3877), per article listed (minimum 3)	0.44
Duplicate copy of PS Form 3817 or PS Form 3877 (per page)	1.15
Bulk Quantities	**Fee**
First 1,000 pieces (or fraction thereof)	$6.70
Each additional 1,000 pieces (or fraction thereof)	0.80
Duplicate copy of PS Form 3606	1.15

COD and Certified **NOT** for International Mail

International Business Reply Service (382)

Fee: Envelopes up to 2 ounces $1.50; Cards $1.00

International Postal Money Order (371)

NOT Available

International Reply Coupons (381) **Fee:** $2.20

Registered Mail (330) NOT Available

Restricted Delivery (350) NOT Available

Return Receipt (340) NOT Available

Korea, Republic of
(South Korea)

Country Conditions for Mailing

Prohibitions (130)
Counterfeit postage stamps.
Documents, books, printed papers, engravings or other articles contrary to public security.
Firearms, sabres, and swords for military use.
Firing caps and loaded metal cartridges for portable firearms.
Machines and paper for making cigarettes.
Salt.
Textile fabrics.
Weights and measures.

Restrictions
Coins; paper currency; banknotes; currency notes; securities payable to bearer; jewelry; manufactured and unmanufactured platinum, gold, and silver; precious stones; and other valuable articles are admitted only if sent in registered First-Class Mail International shipments.
Monthly or weekly journals are admitted to the extent of three copies per person and per issue; they are subject to a permit from the government if they exceed the limit of three copies.
Tobacco and ginseng may only be imported by the Korean government.

Observations
1. Articles addressed for delivery in Korea should show the name of the addressee, street, district, town and province in Korea. The address should be shown also in Korean characters, if known.
2. Service is available only to the provinces comprising the Republic of Korea, i.e., provinces south of the 38th parallel of latitude.
3. The following is a list of the provinces comprising the Republic of Korea:

Cheju-do	*Kangwon-do
Cholla-namdo	*Kyonggi-do
Cholla-pukto	Kyongsang-namdo
Ch'ungch'ong-namdo	Kyongsang-pukto
Ch'ungch'ong-pukto	

4. The provinces marked with the asterisk (*) are divided by the 38th parallel of latitude, and it is the responsibility of the mailers to determine that the post offices to which their parcels are addressed are located south of the 38th parallel. Mail addressed to offices north of the 38th parallel will not be forwarded to destination but will be treated as undeliverable.

Customs Forms Required (123)
First-Class Mail International items and Priority Mail International Flat Rate Envelopes and Small Flat Rate Priced Boxes:
PS Form 2976 (see 123.61)
Priority Mail International parcels:
PS Form 2976-A inside 2976-E (envelope)

Global Express Guaranteed (210) Price Group 6

Refer to Notice 123, *Price List*, for the applicable retail, commercial base, or commercial plus price.
Weight Limit: 70 lbs.

Insurance (212.5)

Insured Amount not over	Fee	Insured Amount not over	Fee
$100	No Fee	For document reconstruction insurance or non-document insurance coverage above $800, add $1.00 per $100 or fraction thereof, up to a maximum of $2,499 per shipment.	
200	$1.00		
300	2.00		
400	3.00		
500	4.00		
600	5.00		
700	6.00		
800	7.00	$2,499 max.	$24.00

Value Limit (212.1)
The maximum value of a GXG shipment to this country is $2,499 or a lesser amount if limited by content or value.

Size Limits (211.22)
The surface area of the address side of the item to be mailed must be large enough to completely contain the Global Express Guaranteed Air Waybill/Shipping Invoice (shipping label), postage, endorsement, and any applicable markings. The shipping label is approximately 5.5 inches high and 9.5 inches long.
Maximum length: 46 inches
Maximum width: 35 inches
Maximum height: 46 inches
Maximum length and girth combined: 108 inches

General Conditions for Mailing
See Publication 141, *Global Express Guaranteed Service Guide,* for information about areas served in the destination country, allowable contents, packaging and labeling requirements, tracking and tracing, service standards, and other conditions for mailing.

Express Mail International (220) Price Group 3

Refer to Notice 123, *Price List*, for the applicable retail, commercial base, or commercial plus price.
Weight Limit: 66 lbs.

Express Mail International — Flat Rate Envelope and Flat Rate Boxes
The maximum weight for the Express Mail International Flat Rate Envelope and the Express Mail International Flat Rate Boxes is 20 pounds. Refer to Notice 123, *Price List*, for the applicable retail, commercial base, or commercial plus price.

Insurance (222.8)
Available for **Express Mail International merchandise shipments** only

Insured Amount not over	Fee	Insured Amount not over	Fee
$100	No Fee	For insurance coverage above $2,000, add $1.50 for each $500 or fraction thereof, up to a maximum of $5,000 per shipment.	
200	$0.85		
500	2.35		
1,000	3.85		
1,500	5.35		
2,000	6.85	$5,000 max.	$15.85

Articles Admitted	Required Customs Form/Endorsement
Business documents, computer data, shipping documents, check clearances, and commercial papers.	No form required. Endorse item clearly next to mailing label as BUSINESS PAPERS.
Merchandise samples without commercial value, microfiche, and magnetic tapes.	PS Form 2976, *Customs — CN 22 and Sender's Declaration.*
Merchandise, advertising materials, and all articles subject to customs duty.	PS Form 2976-A, *Customs Declaration and Dispatch Note CP 72,* inside a PS Form 2976-E, *Customs Declaration Envelope CP 91*. Identify contents completely and state whether import license, if required, is attached.

Size Limits (221.52)
Maximum length: 60 inches
Maximum length and girth combined: 108 inches

Notes:
1. Coins; banknotes; currency notes, including paper money; securities of any kind payable to bearer; traveler's checks; platinum, gold, and silver; precious stones; jewelry; watches; and other valuable articles are prohibited in Express Mail International shipments to the Republic of Korea.
2. Express Mail International With Guarantee service — which offers a date-certain, postage-refund guarantee — is available to the Republic of Korea.

Reciprocal Service Name: Speedpost

Country Code: KR

Areas Served: All

Priority Mail International (230) Price Group 3

Refer to Notice 123, *Price List*, for the applicable retail, commercial base, or commercial plus price.
Weight Limit: 44 lbs.

Note: *Ordinary Priority Mail International includes indemnity at no cost based on weight. (See 230.)*

Priority Mail International — Flat Rate
Flat Rate Envelopes or Small Flat Rate Priced Boxes: The maximum weight is 4 pounds. Refer to Notice 123, *Price List*, for the applicable retail, commercial base, or commercial plus price.

Flat Rate Boxes — Medium and Large: The maximum weight is 20 pounds, or the limit set by the individual country, whichever is less. Refer to Notice 123, *Price List*, for the retail, commercial base, or commercial plus price.

Insurance (232.92)
Available for **Priority Mail International merchandise parcels** only (see 323.72 for markings)

Insured Amount not over	Fee	Insured Amount not over	Fee
$50	$2.45		
100	3.60	Add $1.15 for each additional $100 or fraction of insurance coverage.	
200	4.75		
300	5.90		
400	7.05		
500	8.20	$5,000 max.	$59.95

Size Limits (231.22)
Maximum length: 42 inches
Maximum length and girth combined: 79 inches

First-Class Mail International (240) Price Group 3
For the prices and maximum weights for letters, large envelopes (flats), packages (small packets), and postcards, see Notice 123, *Price List*.

Size Limits
Letters: See 241.212
Postcards: See 241.221
Large Envelopes (Flats): See 241.232
Packages (Small Packets): See 241.242 and 241.243

Airmail M-bags (260) — Direct Sack to One Addressee Price Group 3

Refer to Notice 123, *Price List*, for the applicable retail, commercial base, or commercial plus price.
Weight Limit: 66 lbs.

Matter for the Blind (270)
Free when sent as First-Class Mail International, including Priority Mail International Flat Rate Envelopes and Small Flat Rate Priced Boxes. Weight limit: 4 pounds.
Free when sent as Priority Mail International. Weight limit: 15 pounds.

Extra Services

Certificate of Mailing (313)

Individual Pieces	Fee
Individual article (PS Form 3817)	$1.15
Firm mailing books (PS Form 3877), per article listed (minimum 3)	0.44
Duplicate copy of PS Form 3817 or PS Form 3877 (per page)	1.15
Bulk Quantities	**Fee**
First 1,000 pieces (or fraction thereof)	$6.70
Each additional 1,000 pieces (or fraction thereof)	0.80
Duplicate copy of PS Form 3606	1.15

COD and Certified

NOT for International Mail

International Business Reply Service (382)

Fee: Envelopes up to 2 ounces $1.50; Cards $1.00

International Postal Money Order (371)

NOT Available

International Reply Coupons (381)

Fee: $2.20

Registered Mail (330)

Fee: $11.75

Maximum Indemnity: $47.33
Available for First-Class Mail International, including postcards and Flat Rate Envelopes and Small Flat Rate Priced Boxes, and matter for the blind or other physically handicapped persons. Not applicable to M-bags.

Restricted Delivery (350)

NOT Available

Return Receipt (340)

Fee: $2.35

Available for registered mail and insured Priority Mail International parcels only.

Kosovo, Republic of

Country Conditions for Mailing

Prohibitions (130)
Weapons and ammunition by private individuals.
Cigarette paper.
Coins; banknotes; currency notes (paper money); securities payable to bearer; traveler's checks; platinum, gold, and silver, manufactured or not; precious stones; jewelry; and other valuable articles.
Lottery tickets and advertisements concerning lotteries.
Radioactive materials.

Restrictions
No list furnished.

Observations
Certain shipments may require a license by the U.S. Commerce Department under the Export Administration Regulations (see 530).

Customs Forms Required (123)
First-Class Mail International items and Priority Mail International Flat Rate Envelopes and Small Flat Rate Priced Boxes:
PS Form 2976 (see 123.61)
Priority Mail International parcels:
PS Form 2976-A inside 2976-E (envelope)

Global Express Guaranteed (210) Price Group 4

Refer to Notice 123, *Price List*, for the applicable retail, commercial base, or commercial plus price.
Weight Limit: 70 lbs.

Insurance (212.5)

Insured Amount not over	Fee	Insured Amount not over	Fee
$100	No Fee	For document reconstruction insurance or non-document insurance coverage above $800, add $1.00 per $100 or fraction thereof, up to a maximum of $2,499 per shipment.	
200	$1.00		
300	2.00		
400	3.00		
500	4.00		
600	5.00		
700	6.00		
800	7.00	$2,499 max.	$24.00

Value Limit (212.1)
The maximum value of a GXG shipment to this country is $2,499 or a lesser amount if limited by content or value.

Size Limits (211.22)
The surface area of the address side of the item to be mailed must be large enough to completely contain the Global Express Guaranteed Air Waybill/Shipping Invoice (shipping label), postage, endorsement, and any applicable markings. The shipping label is approximately 5.5 inches high and 9.5 inches long.
Maximum length: 46 inches
Maximum width: 35 inches
Maximum height: 46 inches
Maximum length and girth combined: 108 inches

General Conditions for Mailing
See Publication 141, *Global Express Guaranteed Service Guide,* for information about areas served in the destination country, allowable contents, packaging and labeling requirements, tracking and tracing, service standards, and other conditions for mailing.

Note: To determine conditions and available city destinations for the Republic of Kosovo, refer to Publication 141's country listing for the Republic of Serbia ("Serbia").

Express Mail International (220)

Not Available

Priority Mail International (230) Price Group 5

Refer to Notice 123, *Price List*, for the applicable retail, commercial base, or commercial plus price.
Weight Limit: 70 lbs.

Note: *Ordinary Priority Mail International includes indemnity at no cost based on weight. (See 230.)*

Priority Mail International — Flat Rate
Flat Rate Envelopes or Small Flat Rate Priced Boxes: The maximum weight is 4 pounds. Refer to Notice 123, *Price List*, for the applicable retail, commercial base, or commercial plus price.

Flat Rate Boxes — Medium and Large: The maximum weight is 20 pounds, or the limit set by the individual country, whichever is less. Refer to Notice 123, *Price List*, for the retail, commercial base, or commercial plus price.

Insurance (232.92) NOT Available

Size Limits (231.22)
Maximum length: 42 inches
Maximum length and girth combined: 79 inches

First-Class Mail International (240) Price Group 5
For the prices and maximum weights for letters, large envelopes (flats), packages (small packets), and postcards, see Notice 123, *Price List*.

Size Limits
Letters: See 241.212
Postcards: See 241.221
Large Envelopes (Flats): See 241.232
Packages (Small Packets): See 241.242 and 241.243

Airmail M-bags (260) — Direct Sack to One Addressee

Price Group 5

Refer to Notice 123, *Price List*, for the applicable retail, commercial base, or commercial plus price.
Weight Limit: 66 lbs.

Matter for the Blind (270)

Free when sent as First-Class Mail International, including Priority Mail International Flat Rate Envelopes and Small Flat Rate Priced Boxes. Weight limit: 4 pounds.

Free when sent as Priority Mail International. Weight limit: 15 pounds.

Extra Services

Certificate of Mailing (313)

Individual Pieces	**Fee**
Individual article (PS Form 3817)	$1.15
Firm mailing books (PS Form 3877), per article listed (minimum 3)	0.44
Duplicate copy of PS Form 3817 or PS Form 3877 (per page)	1.15
Bulk Quantities	**Fee**
First 1,000 pieces (or fraction thereof)	$6.70
Each additional 1,000 pieces (or fraction thereof)	0.80
Duplicate copy of PS Form 3606	1.15

COD and Certified

NOT for International Mail

International Business Reply Service (382)

Fee: Envelopes up to 2 ounces $1.50; Cards $1.00

International Postal Money Order (371)

NOT Available

International Reply Coupons (381)

Fee: $2.20

Registered Mail (330)

Fee: $11.75

Maximum Indemnity: $47.33

Available for First-Class Mail International, including postcards and Flat Rate Envelopes and Small Flat Rate Priced Boxes, and matter for the blind or other physically handicapped persons. Not applicable to M-bags.

Restricted Delivery (350)

NOT Available

Return Receipt (340)

Fee: $2.35

Available for registered mail only.

Kuwait

Country Conditions for Mailing

Prohibitions (130)

Lighters containing butane gas, and refills therefor.
Magazines or other printed matter containing illustrations of nude or partly nude human figures.
Perishable infectious biological substances.
Radioactive materials.

Restrictions

Addressees are required to obtain import licenses for preserved meat, dairy products, drugs, serums and vaccines.
Jewels, precious stones, and metals imported for commercial or resale purposes, are subject to prior authorization of the Ministry of Trade and Industry of Kuwait.
Medicines and pills must be accompanied by a medical prescription or documents indicating their specifications or composition.
Tapes and cassettes must not be sent in Registered Mail. Such articles are admitted in ordinary mail.
Used clothing intended for sale must be accompanied by a certificate of disinfection or sterilization.

Observations

None

Customs Forms Required (123)

First-Class Mail International items and Priority Mail International Flat Rate Envelopes and Small Flat Rate Priced Boxes:
PS Form 2976 (see 123.61)
Priority Mail International parcels:
PS Form 2976-A inside 2976-E (envelope)

Global Express Guaranteed (210) Price Group 6

Refer to Notice 123, *Price List*, for the applicable retail, commercial base, or commercial plus price.
Weight Limit: 70 lbs.

Insurance (212.5)

Insured Amount not over	Fee	Insured Amount not over	Fee
$100	No Fee	For document reconstruction insurance or non-document insurance coverage above $800, add $1.00 per $100 or fraction thereof, up to a maximum of $2,499 per shipment.	
200	$1.00		
300	2.00		
400	3.00		
500	4.00		
600	5.00		
700	6.00		
800	7.00	$2,499 max.	$24.00

Value Limit (212.1)

The maximum value of a GXG shipment to this country is $2,499 or a lesser amount if limited by content or value.

Size Limits (211.22)

The surface area of the address side of the item to be mailed must be large enough to completely contain the Global Express Guaranteed Air Waybill/Shipping Invoice (shipping label), postage, endorsement, and any applicable markings. The shipping label is approximately 5.5 inches high and 9.5 inches long.
Maximum length: 46 inches
Maximum width: 35 inches
Maximum height: 46 inches
Maximum length and girth combined: 108 inches

General Conditions for Mailing

See Publication 141, *Global Express Guaranteed Service Guide,* for information about areas served in the destination country, allowable contents, packaging and labeling requirements, tracking and tracing, service standards, and other conditions for mailing.

Express Mail International (220) Price Group 8

Refer to Notice 123, *Price List*, for the applicable retail, commercial base, or commercial plus price.
Weight Limit: 66 lbs.

Express Mail International — Flat Rate Envelope and Flat Rate Boxes

The maximum weight for the Express Mail International Flat Rate Envelope and the Express Mail International Flat Rate Boxes is 20 pounds. Refer to Notice 123, *Price List*, for the applicable retail, commercial base, or commercial plus price.

Insurance (222.8)

Available for **Express Mail International merchandise shipments** only

Insured Amount not over	Fee	Insured Amount not over	Fee
$100	No Fee	For insurance coverage above $2,000, add $1.50 for each $500 or fraction thereof, up to a maximum of $5,000 per shipment.	
200	$0.85		
500	2.35		
1,000	3.85		
1,500	5.35		
2,000	6.85	$5,000 max.	$15.85

Articles Admitted	Required Customs Form/Endorsement
Business papers, documents, and commercial papers.	No form required. Endorse item clearly next to mailing label as BUSINESS PAPERS.
Merchandise samples without commercial value, microfilm, and microfiche.	PS Form 2976, *Customs — CN 22 and Sender's Declaration.*
Merchandise and all articles subject to customs duty.	PS Form 2976-A, *Customs Declaration and Dispatch Note CP 72,* inside a PS Form 2976-E, *Customs Declaration Envelope CP 91.*

Size Limits (221.52)

Maximum length: 36 inches
Maximum length and girth combined: 79 inches

Notes:

1. Express Mail International items mailed to Kuwait should bear the addressee's telephone number.
2. Coins; banknotes; currency notes, including paper money; securities of any kind payable to bearer; traveler's checks; platinum, gold, and silver; precious stones; jewelry; watches; and other valuable articles are prohibited in Express Mail International shipments to Kuwait.

Reciprocal Service Name: Mumtaz Post

Country Code: KW

Areas Served: All

Priority Mail International (230) Price Group 8

Refer to Notice 123, *Price List*, for the applicable retail, commercial base, or commercial plus price.
Weight Limit: 66 lbs.

Note: *Ordinary Priority Mail International includes indemnity at no cost based on weight. (See 230.)*

Priority Mail International — Flat Rate

Flat Rate Envelopes or Small Flat Rate Priced Boxes: The maximum weight is 4 pounds. Refer to Notice 123, *Price List*, for the applicable retail, commercial base, or commercial plus price.

Flat Rate Boxes — Medium and Large: The maximum weight is 20 pounds, or the limit set by the individual country, whichever is less. Refer to Notice 123, *Price List*, for the retail, commercial base, or commercial plus price.

Insurance (232.92)

Available for **Priority Mail International merchandise parcels** only (see 323.72 for markings)

Insured Amount not over	Fee	Insured Amount not over	Fee
$50	$2.45		
100	3.60	Add $1.15 for each additional $100 or fraction of insurance coverage.	
200	4.75		
300	5.90		
400	7.05		
500	8.20	$2,000 max.	$25.45

Size Limits (231.22)

Maximum length: 42 inches
Maximum length and girth combined: 79 inches

First-Class Mail International (240) Price Group 8

For the prices and maximum weights for letters, large envelopes (flats), packages (small packets), and postcards, see Notice 123, *Price List*.

Size Limits

Letters: See 241.212
Postcards: See 241.221
Large Envelopes (Flats): See 241.232
Packages (Small Packets): See 241.242 and 241.243

Airmail M-bags (260) — Direct Sack to One Addressee Price Group 8

Refer to Notice 123, *Price List*, for the applicable retail, commercial base, or commercial plus price.
Weight Limit: 66 lbs.

Matter for the Blind (270) NOT Available

Extra Services

Certificate of Mailing (313)

Individual Pieces	Fee
Individual article (PS Form 3817)	$1.15
Firm mailing books (PS Form 3877), per article listed (minimum 3)	0.44
Duplicate copy of PS Form 3817 or PS Form 3877 (per page)	1.15
Bulk Quantities	**Fee**
First 1,000 pieces (or fraction thereof)	$6.70
Each additional 1,000 pieces (or fraction thereof)	0.80
Duplicate copy of PS Form 3606	1.15

COD and Certified **NOT** for International Mail

International Business Reply Service (382)

Fee: Envelopes up to 2 ounces $1.50; Cards $1.00

International Postal Money Order (371)

NOT Available

International Reply Coupons (381) **Fee:** $2.20

Registered Mail (330) **Fee:** $11.75

Maximum Indemnity: $47.33
Available for First-Class Mail International, including postcards and Flat Rate Envelopes and Small Flat Rate Priced Boxes, and matter for the blind or other physically handicapped persons. Not applicable to M-bags.

Restricted Delivery (350) NOT Available

Return Receipt (340) **Fee:** $2.35

Available for registered mail and insured Priority Mail International parcels only.

Kyrgyzstan

Country Conditions for Mailing

Prohibitions (130)

Explosive, flammable, or dangerous substances.
Military-type firearms, and ammunitions therefor, other than hunting weapons, knives and blades, sheaths therefor, specially intended for attack (truncheons, stilettos).
Narcotics, psychotropic and other substances that encourage drug addiction, and hashish.
Perishable goods.
Perishable infectious biological substances.
Perishable noninfectious biological substances.
Printed matter, plates, negatives, films for exposure, phonographs, tapes, video cassettes and video discs, information for electronic calculators, manuscripts, disks and other sound recordings, drawings and other printing and plastic arts products containing information that may prejudice the constitutional order of the State, public, political, or economic interests, or State sovereignty; in defense of war, terrorism, incitement to racial hatred such as Zionism, anti-Semitism, fascism, national exclusion, and religious provocation; and pornographic publications.
Radioactive materials.

Restrictions

Coins; currency notes or securities of any kind payable to bearer; traveler's checks; platinum, gold, or silver (whether manufactured or not); precious stones; jewels; or other valuable articles may be mailed only as insured Priority Mail International parcels. Kyrgyzstan will not accept liability in cases of loss or damage to such items if they are accepted.
High-frequency radio-electronic devices and apparatus; ultrasonic apparatus; industrial, scientific, and medical generators; detection devices used to measure transport speed (radar) are admitted only on the authorization of the Ministry of Transport and Communications.
Seeds and parts of plants intended for planting require authorization of the Ministry of Agriculture.

Observations

None.

Customs Forms Required (123)

First-Class Mail International items and Priority Mail International Flat Rate Envelopes and Small Flat Rate Priced Boxes:
PS Form 2976 (see 123.61)
Priority Mail International parcels:
PS Form 2976-A inside 2976-E (envelope)

Global Express Guaranteed (210) Price Group 4

Refer to Notice 123, *Price List*, for the applicable retail, commercial base, or commercial plus price.
Weight Limit: 70 lbs.

Insurance (212.5)

Insured Amount not over	Fee	Insured Amount not over	Fee
$100	No Fee	For document reconstruction insurance or non-document insurance coverage above $800, add $1.00 per $100 or fraction thereof, up to a maximum of $2,499 per shipment.	
200	$1.00		
300	2.00		
400	3.00		
500	4.00		
600	5.00		
700	6.00		
800	7.00	$2,499 max.	$24.00

Value Limit (212.1)

The maximum value of a GXG shipment to this country is $2,499 or a lesser amount if limited by content or value.

Size Limits (211.22)

The surface area of the address side of the item to be mailed must be large enough to completely contain the Global Express Guaranteed Air Waybill/Shipping Invoice (shipping label), postage, endorsement, and any applicable markings. The shipping label is approximately 5.5 inches high and 9.5 inches long.
Maximum length: 46 inches
Maximum width: 35 inches
Maximum height: 46 inches
Maximum length and girth combined: 108 inches

General Conditions for Mailing

See Publication 141, *Global Express Guaranteed Service Guide,* for information about areas served in the destination country, allowable contents, packaging and labeling requirements, tracking and tracing, service standards, and other conditions for mailing.

Express Mail International (220) Price Group 6

Refer to Notice 123, *Price List*, for the applicable retail, commercial base, or commercial plus price.
Weight Limit: 66 lbs.

Express Mail International — Flat Rate Envelope and Flat Rate Boxes

The maximum weight for the Express Mail International Flat Rate Envelope and the Express Mail International Flat Rate Boxes is 20 pounds. Refer to Notice 123, *Price List*, for the applicable retail, commercial base, or commercial plus price.

Insurance (222.8)

Available for **Express Mail International merchandise shipments** only

Insured Amount not over	Fee	Insured Amount not over	Fee
$100	No Fee	For insurance coverage above $2,000, add $1.50 for each $500 or fraction thereof, up to a maximum of $5,000 per shipment.	
200	$0.85		
500	2.35		
1,000	3.85		
1,500	5.35		
2,000	6.85	$5,000 max.	$15.85

Articles Admitted	Required Customs Form/Endorsement
Correspondence, business papers, and documents.	PS Form 2976, *Customs — CN 22 and Sender's Declaration.* Endorse item clearly next to mailing label as BUSINESS PAPERS.
Merchandise samples without commercial value.	PS Form 2976-A, *Customs Declaration and Dispatch Note CP 72,* inside a PS Form 2976-E, *Customs Declaration Envelope CP 91.*
Merchandise and all articles subject to customs duty.	PS Form 2976-A, *Customs Declaration and Dispatch Note CP 72,* inside a PS Form 2976-E, *Customs Declaration Envelope CP 91.* An invoice, in duplicate, is required for all commercial shipments regardless of value and all personal shipments valued at $300 or more. The invoices must be either affixed to the outside of the parcel or enclosed in PS Form 2976-E with the customs declaration.

Size Limits (221.52)
Maximum length: 79 inches
Maximum length and girth combined: 108 inches

Notes:
1. An invoice, in duplicate, is required for all commercial shipments regardless of value and for all personal shipments valued at $300 or more. The invoices must be either affixed to the outside of the parcel or enclosed in PS Form 2976-E with the customs declaration.
2. Arms, weapons, and human remains are prohibited.
3. Coins; banknotes; currency notes, including paper money; securities of any kind payable to bearer; traveler's checks; platinum, gold, and silver; precious stones; jewelry; watches; and other valuable articles are prohibited in Express Mail International shipments to Kyrgyzstan.
4. Express Mail International shipments must have a street address. Post office box addresses should not be used. A local telephone number for addressee should be provided if possible.
5. All items must have both the county and city in the address.

Reciprocal Service Name: EMS

Country Code: KG

Areas Served:
Express Mail International is available ***only*** to the following location:
720000 Bishek (Frunze)

Priority Mail International (230) Price Group 6

Refer to Notice 123, *Price List*, for the applicable retail, commercial base, or commercial plus price.
Weight Limit: 44 lbs.

Note: *Ordinary Priority Mail International includes indemnity at no cost based on weight. (See 230.)*

Priority Mail International — Flat Rate
Flat Rate Envelopes or Small Flat Rate Priced Boxes: The maximum weight is 4 pounds. Refer to Notice 123, *Price List*, for the applicable retail, commercial base, or commercial plus price.

Flat Rate Boxes — Medium and Large: The maximum weight is 20 pounds, or the limit set by the individual country, whichever is less. Refer to Notice 123, *Price List*, for the retail, commercial base, or commercial plus price.

Insurance (232.92)
Available for **Priority Mail International merchandise parcels** only (see 323.72 for markings)

Insured Amount not over	Fee	Insured Amount not over	Fee
$50	$2.45	Add $1.15 for each additional $100 or fraction of insurance coverage.	
100	3.60		
200	4.75		
300	5.90		
400	7.05		
500	8.20	$5,000 max.	$59.95

Size Limits (231.22)
Maximum length: 42 inches
Maximum length and girth combined: 79 inches

First-Class Mail International (240) Price Group 6
For the prices and maximum weights for letters, large envelopes (flats), packages (small packets), and postcards, see Notice 123, *Price List*.

Size Limits
Letters: See 241.212
Postcards: See 241.221
Large Envelopes (Flats): See 241.232
Packages (Small Packets): See 241.242 and 241.243

Airmail M-bags (260) — Direct Sack to One Addressee Price Group 6

Refer to Notice 123, *Price List*, for the applicable retail, commercial base, or commercial plus price.
Weight Limit: 66 lbs.

Matter for the Blind (270)
Free when sent as First-Class Mail International, including Priority Mail International Flat Rate Envelopes and Small Flat Rate Priced Boxes. Weight limit: 4 pounds.
Free when sent as Priority Mail International. Weight limit: 15 pounds.

Extra Services

Certificate of Mailing (313)

Individual Pieces	Fee
Individual article (PS Form 3817)	$1.15
Firm mailing books (PS Form 3877), per article listed (minimum 3)	0.44
Duplicate copy of PS Form 3817 or PS Form 3877 (per page)	1.15
Bulk Quantities	**Fee**
First 1,000 pieces (or fraction thereof)	$6.70
Each additional 1,000 pieces (or fraction thereof)	0.80
Duplicate copy of PS Form 3606	1.15

COD and Certified **NOT** for International Mail

International Business Reply Service (382)
Fee: Envelopes up to 2 ounces $1.50; Cards $1.00

International Postal Money Order (371)
NOT Available

International Reply Coupons (381)
Fee: $2.20

Registered Mail (330)
Fee: $11.75

Maximum Indemnity: $47.33
Available for First-Class Mail International, including postcards and Flat Rate Envelopes and Small Flat Rate Priced Boxes, and matter for the blind or other physically handicapped persons. Not applicable to M-bags.

Restricted Delivery (350)
Fee: $4.55

Available for registered mail with a return receipt.
Endorsements: A remettre en main propre.

Return Receipt (340)
Fee: $2.35

Available for registered mail and insured Priority Mail International parcels only.

Laos

Country Conditions for Mailing

Prohibitions (130)

Coins; banknotes; currency notes (paper money); securities of any kind payable to bearer; traveler's checks; platinum, gold, and silver (manufactured or not); precious stones; jewelry; and other valuable articles.
Perishable infectious biological substances.
Perishable noninfectious biological substances.
Radioactive materials.

Restrictions

Most merchandise requires special permission from the Laotian authorities for importation. Senders should be advised in their own interest to ascertain before mailing whether their goods are admissible.

Observations

The following are the only post offices in operation:
Attapeu
Houeisai
Khammouane
Luangnamtha
Luangprabang
Oudomxay
Paksane
Paksé
Phonehong
Phongsaly
Samneua
Saravane
Savannakhet
Sayaboury
Sékong
Vientiane
Xiengkhouang

Customs Forms Required (123)

First-Class Mail International items and Priority Mail International Flat Rate Envelopes and Small Flat Rate Priced Boxes:
PS Form 2976 (see 123.61)
Priority Mail International parcels:
PS Form 2976-A inside 2976-E (envelope)

Global Express Guaranteed (210) Price Group 8

Refer to Notice 123, *Price List*, for the applicable retail, commercial base, or commercial plus price.
Weight Limit: 70 lbs.

Insurance (212.5)

Insured Amount not over	Fee	Insured Amount not over	Fee
$100	No Fee	For document reconstruction insurance or non-document insurance coverage above $800, add $1.00 per $100 or fraction thereof, up to a maximum of $2,499 per shipment.	
200	$1.00		
300	2.00		
400	3.00		
500	4.00		
600	5.00		
700	6.00		
800	7.00	$2,499 max.	$24.00

Value Limit (212.1)

The maximum value of a GXG shipment to this country is $2,499 or a lesser amount if limited by content or value.

Size Limits (211.22)

The surface area of the address side of the item to be mailed must be large enough to completely contain the Global Express Guaranteed Air Waybill/Shipping Invoice (shipping label), postage, endorsement, and any applicable markings. The shipping label is approximately 5.5 inches high and 9.5 inches long.
Maximum length: 46 inches
Maximum width: 35 inches
Maximum height: 46 inches
Maximum length and girth combined: 108 inches

General Conditions for Mailing

See Publication 141, *Global Express Guaranteed Service Guide,* for information about areas served in the destination country, allowable contents, packaging and labeling requirements, tracking and tracing, service standards, and other conditions for mailing.

Express Mail International (220) Price Group 6

Refer to Notice 123, *Price List*, for the applicable retail, commercial base, or commercial plus price.
Weight Limit: 66 lbs.

Express Mail International — Flat Rate Envelope and Flat Rate Boxes

The maximum weight for the Express Mail International Flat Rate Envelope and the Express Mail International Flat Rate Boxes is 20 pounds. Refer to Notice 123, *Price List*, for the applicable retail, commercial base, or commercial plus price.

Insurance (222.8)

Available for **Express Mail International merchandise shipments** only

Insured Amount not over	Fee	Insured Amount not over	Fee
$100	No Fee	For insurance coverage above $2,000, add $1.50 for each $500 or fraction thereof, up to a maximum of $5,000 per shipment.	
200	$0.85		
500	2.35		
1,000	3.85		
1,500	5.35		
2,000	6.85	$5,000 max.	$15.85

Articles Admitted	Required Customs Form/Endorsement
Correspondence and business papers.	PS Form 2976, *Customs — CN 22 and Sender's Declaration.* Endorse item clearly next to mailing label as BUSINESS PAPERS.
Merchandise samples without commercial value and not subject to customs duty.	PS Form 2976, *Customs — CN 22 and Sender's Declaration.*
Merchandise and all articles subject to customs duty and with commercial value exceeding $40.	PS Form 2976-A, *Customs Declaration and Dispatch Note CP 72,* inside a PS Form 2976-E, *Customs Declaration Envelope CP 91.* Two copies of a commercial invoice must be included with each item.

Size Limits (221.52)

Maximum length: 36 inches
Maximum length and girth combined: 79 inches

Note:
Coins; banknotes; currency notes, including paper money; securities of any kind payable to bearer; traveler's checks; platinum, gold, and silver; precious stones; jewelry; watches; and other valuable articles are prohibited in Express Mail International shipments to Laos.

Reciprocal Service Name: EMS Laos Express

Country Code: LA

Areas Served:

0100 Chanthaboury	0900 Phonsavanh
0112 Hatsayfong	0607 Phonxay
0500 Houeisai	0700 Sam Neua
1200 Khammouane	1400 Saravane
1300 Khanthaboury	1300 Savannakhet
0300 Luang Namtha	0800 Sayaboury
0600 Luang Prabang	0101 Sikhottabong
0400 Muang Xay	0103 Sisattanak
0602 Muong Nane	1200 Thakhek
0605 Muong Ngoy	1500 Thateng
0604 Nambak	0100 Vientiane
0114 Naxaythong	0116 Xaysetha
0120 Pakngum	0117 Xaythany
1100 Paksane	0900 Xieng Khouang
1600 Pakse	0601 Xieng Ngeun
1000 Phone Hong	

Priority Mail International (230) Price Group 6

Refer to Notice 123, *Price List*, for the applicable retail, commercial base, or commercial plus price.
Weight Limit: 44 lbs.

Note: *Ordinary Priority Mail International includes indemnity at no cost based on weight. (See 230.)*

Priority Mail International — Flat Rate
Flat Rate Envelopes or Small Flat Rate Priced Boxes: The maximum weight is 4 pounds. Refer to Notice 123, *Price List*, for the applicable retail, commercial base, or commercial plus price.

Flat Rate Boxes — Medium and Large: The maximum weight is 20 pounds, or the limit set by the individual country, whichever is less. Refer to Notice 123, *Price List*, for the retail, commercial base, or commercial plus price.

Insurance (232.92) NOT Available

Size Limits (231.22)
Maximum length: 42 inches
Maximum length and girth combined: 79 inches

First-Class Mail International (240) Price Group 6
For the prices and maximum weights for letters, large envelopes (flats), packages (small packets), and postcards, see Notice 123, *Price List*.

Size Limits
Letters: See 241.212
Postcards: See 241.221
Large Envelopes (Flats): See 241.232
Packages (Small Packets): See 241.242 and 241.243

Airmail M-bags (260) — Direct Sack to One Addressee Price Group 6

Refer to Notice 123, *Price List*, for the applicable retail, commercial base, or commercial plus price.
Weight Limit: 66 lbs.

Matter for the Blind (270)
Free when sent as First-Class Mail International, including Priority Mail International Flat Rate Envelopes and Small Flat Rate Priced Boxes. Weight limit: 4 pounds.
Free when sent as Priority Mail International. Weight limit: 15 pounds.

Extra Services

Certificate of Mailing (313)

Individual Pieces	Fee
Individual article (PS Form 3817)	$1.15
Firm mailing books (PS Form 3877), per article listed (minimum 3)	0.44
Duplicate copy of PS Form 3817 or PS Form 3877 (per page)	1.15
Bulk Quantities	**Fee**
First 1,000 pieces (or fraction thereof)	$6.70
Each additional 1,000 pieces (or fraction thereof)	0.80
Duplicate copy of PS Form 3606	1.15

COD and Certified **NOT** for International Mail

International Business Reply Service (382)
Fee: Envelopes up to 2 ounces $1.50; Cards $1.00

International Postal Money Order (371)
NOT Available

International Reply Coupons (381) **Fee:** $2.20

Registered Mail (330) **Fee:** $11.75
Maximum Indemnity: $47.33
Available for First-Class Mail International, including postcards and Flat Rate Envelopes and Small Flat Rate Priced Boxes, and matter for the blind or other physically handicapped persons. Not applicable to M-bags.

Restricted Delivery (350) **Fee:** $4.55
Available for registered mail with a return receipt.
Endorsements: A remettre en main propre.

Return Receipt (340) **Fee:** $2.35
Available for registered mail only.

Latvia

Country Conditions for Mailing

Prohibitions (130)

Arms, ammunition, parts and accessories.
Coins, bank notes, currency notes (paper money), securities of any kind payable to bearer; traveler's checks, platinum, gold, and silver (manufactured or not); precious stones; jewelry and other valuable articles.
Explosives and combustible materials.
Hyacinth bulb, carnation and chrysanthemum seedling and cuttings, seeds of leguminous plants and seeds in quarantine.
Live animals except bees and leeches.
Narcotics and psychotropic substances.
Perishable infectious biological substances.
Perishable noninfectious biological substances.
Publications harmful to young people; works contrary to public order; obscene or immoral articles.
Radioactive materials.
Raw animal products.

Restrictions

A veterinary service certificate must accompany animal products (with the exception of canned foods).
Articles subject to customs duty may not be sent in ordinary or registered First-Class Mail International items, including the Priority Mail International Flat Rate Envelope and Small Flat Rate Priced Boxes.
Pharmaceutical products may *not* be sent to private individuals who are resident in Latvia. Such products can only be mailed to pharmaceutical manufacturers, pharmaceutical wholesalers, or accredited representatives of foreign producers of medicines who have a business presence in Latvia. A quality certificate and a shipper's invoice prepared by the product's producer must accompany all mailpieces that contain pharmaceutical products.
Products of floras must be accompanied by a plant health (phytosanitary) certificate.

Observations

None

Customs Forms Required (123)

First-Class Mail International items and Priority Mail International Flat Rate Envelopes and Small Flat Rate Priced Boxes:
PS Form 2976 (see 123.61)
Priority Mail International parcels:
PS Form 2976-A inside 2976-E (envelope)

Global Express Guaranteed (210) Price Group 4

Refer to Notice 123, *Price List*, for the applicable retail, commercial base, or commercial plus price.

Weight Limit: 70 lbs.

Insurance (212.5)

Insured Amount not over	Fee	Insured Amount not over	Fee
$100	No Fee	For document reconstruction insurance or non-document insurance coverage above $800, add $1.00 per $100 or fraction thereof, up to a maximum of $2,499 per shipment.	
200	$1.00		
300	2.00		
400	3.00		
500	4.00		
600	5.00		
700	6.00		
800	7.00	$2,499 max.	$24.00

Value Limit (212.1)

The maximum value of a GXG shipment to this country is $2,499 or a lesser amount if limited by content or value.

Size Limits (211.22)

The surface area of the address side of the item to be mailed must be large enough to completely contain the Global Express Guaranteed Air Waybill/Shipping Invoice (shipping label), postage, endorsement, and any applicable markings. The shipping label is approximately 5.5 inches high and 9.5 inches long.
Maximum length: 46 inches
Maximum width: 35 inches
Maximum height: 46 inches
Maximum length and girth combined: 108 inches

General Conditions for Mailing

See Publication 141, *Global Express Guaranteed Service Guide,* for information about areas served in the destination country, allowable contents, packaging and labeling requirements, tracking and tracing, service standards, and other conditions for mailing.

Express Mail International (220) Price Group 4

Refer to Notice 123, *Price List*, for the applicable retail, commercial base, or commercial plus price.

Weight Limit: 66 lbs.

Express Mail International — Flat Rate Envelope and Flat Rate Boxes

The maximum weight for the Express Mail International Flat Rate Envelope and the Express Mail International Flat Rate Boxes is 20 pounds. Refer to Notice 123, *Price List*, for the applicable retail, commercial base, or commercial plus price.

Insurance (222.8)

Available for **Express Mail International merchandise shipments** only

Insured Amount not over	Fee	Insured Amount not over	Fee
$100	No Fee	For insurance coverage above $2,000, add $1.50 for each $500 or fraction thereof, up to a maximum of $5,000 per shipment.	
200	$0.85		
500	2.35		
1,000	3.85		
1,500	5.35		
2,000	6.85	$5,000 max.	$15.85

Articles Admitted	Required Customs Form/Endorsement
Correspondence, business papers, and documents.	PS Form 2976, *Customs — CN 22 and Sender's Declaration.* Endorse item clearly next to mailing label as BUSINESS PAPERS.
Merchandise samples without commercial value.	PS Form 2976-A, *Customs Declaration and Dispatch Note CP 72,* inside a PS Form 2976-E, *Customs Declaration Envelope CP 91.*
Merchandise and all articles subject to customs duty.	PS Form 2976-A, *Customs Declaration and Dispatch Note CP 72,* inside a PS Form 2976-E, *Customs Declaration Envelope CP 91.*

Size Limits (221.52)
Maximum length: 36 inches
Maximum length and girth combined: 79 inches

Notes:
1. Addressees are required to obtain import licenses/permits to receive most goods.
2. Coins; banknotes; currency notes, including paper money; securities of any kind payable to bearer; traveler's checks; platinum, gold, and silver; precious stones; jewelry; watches; and other valuable articles are prohibited in Express Mail International shipments to Latvia.

Reciprocal Service Name: There is no reciprocal service.

Country Code: LV

Areas Served: All

Priority Mail International (230) Price Group 4

Refer to Notice 123, *Price List*, for the applicable retail, commercial base, or commercial plus price.
Weight Limit: 70 lbs.

Note: *Ordinary Priority Mail International includes indemnity at no cost based on weight. (See 230.)*

Priority Mail International — Flat Rate
Flat Rate Envelopes or Small Flat Rate Priced Boxes: The maximum weight is 4 pounds. Refer to Notice 123, *Price List*, for the applicable retail, commercial base, or commercial plus price.

Flat Rate Boxes — Medium and Large: The maximum weight is 20 pounds, or the limit set by the individual country, whichever is less. Refer to Notice 123, *Price List*, for the retail, commercial base, or commercial plus price.

Insurance (232.92)
Available for **Priority Mail International merchandise parcels** only (see 323.72 for markings)

Insured Amount not over	Fee	Insured Amount not over	Fee
$50	$2.45		
100	3.60	Add $1.15 for each additional $100 or fraction of insurance coverage.	
200	4.75		
300	5.90		
400	7.05		
500	8.20	$1,458 max.	$19.70

Size Limits (231.22)
Maximum length: 42 inches
Maximum length and girth combined: 79 inches

First-Class Mail International (240) Price Group 4
For the prices and maximum weights for letters, large envelopes (flats), packages (small packets), and postcards, see Notice 123, *Price List*.

Size Limits
Letters: See 241.212
Postcards: See 241.221
Large Envelopes (Flats): See 241.232
Packages (Small Packets): See 241.242 and 241.243

Airmail M-bags (260) — Direct Sack to One Addressee Price Group 4

Refer to Notice 123, *Price List*, for the applicable retail, commercial base, or commercial plus price.
Weight Limit: 66 lbs.

Matter for the Blind (270)
Free when sent as First-Class Mail International, including Priority Mail International Flat Rate Envelopes and Small Flat Rate Priced Boxes. Weight limit: 4 pounds.
Free when sent as Priority Mail International. Weight limit: 15 pounds.

Extra Services

Certificate of Mailing (313)

Individual Pieces	Fee
Individual article (PS Form 3817)	$1.15
Firm mailing books (PS Form 3877), per article listed (minimum 3)	0.44
Duplicate copy of PS Form 3817 or PS Form 3877 (per page)	1.15
Bulk Quantities	**Fee**
First 1,000 pieces (or fraction thereof)	$6.70
Each additional 1,000 pieces (or fraction thereof)	0.80
Duplicate copy of PS Form 3606	1.15

COD and Certified **NOT** for International Mail

International Business Reply Service (382)
Fee: Envelopes up to 2 ounces $1.50; Cards $1.00

International Postal Money Order (371)
NOT Available

International Reply Coupons (381) **Fee:** $2.20

Registered Mail (330) **Fee:** $11.75
Maximum Indemnity: $47.33
Available for First-Class Mail International, including postcards and Flat Rate Envelopes and Small Flat Rate Priced Boxes, and matter for the blind or other physically handicapped persons. Not applicable to M-bags.

Restricted Delivery (350) **Fee:** $4.55
Available for registered mail with a return receipt.
Endorsements: A remettre en main propre.

Return Receipt (340) **Fee:** $2.35
Available for registered mail and insured Priority Mail International parcels only.

Lebanon

Country Conditions for Mailing

Prohibitions (130)

Artificial butters and adulterated or harmful products.
Automatic and electrical gambling devices.
Cigarette papers and machines for the manufacture or packing of cigarettes.
Coins; banknotes; currency notes; securities payable to bearer; traveler's checks; manufactured and unmanufactured platinum, gold, and silver; precious stones; jewelry; and other precious articles.
Essences, essential oils, and products derived therefrom for the use in the manufacture of imitated beverages, ices, and pastries.
False trade-marks, trade names, or indications of origin.
Lighters using butane gas.
Liquids, easily liquefiable elements, and glass or similarly fragile articles.
Radioactive materials.

Restrictions

Leaf tobacco, cigars, and cigarettes are subject to prior authorization from the Lebanese Ministry of Finance.
Medicines, surgical and dental instruments are admitted only under permit from the Ministry of Public Health in Lebanon.

Observations

1. Commercial shipments valued at 50 Lebanese pounds or over, require 3 copies of a combined certificate of origin and commercial invoice. The document must be certified by a chamber of commerce or similar organization and, if a Lebanese consular officer is located at the place of mailing, it must be legalized by him or her. Gift shipments regardless of value and commercial shipments valued at less than 50 Lebanese pounds are exempt from the requirement.
2. Articles must be carefully addressed to show the exact place of destination but not the names of other places nearby. The office of destination must be written legibly in Arabic characters, as far as possible, as well as in English or French.
3. Import licenses are required for many kinds of merchandise. Therefore, senders should ascertain from the addressee before mailing whether the necessary documents are held. Items containing small quantities not exceeding 100 Lebanese pounds in value are not subject to an import permit.

Customs Forms Required (123)

First-Class Mail International items and Priority Mail International Flat Rate Envelopes and Small Flat Rate Priced Boxes:
PS Form 2976 (see 123.61)
Priority Mail International parcels:
PS Form 2976-A inside 2976-E (envelope)

Global Express Guaranteed (210) Price Group 6

Refer to Notice 123, *Price List*, for the applicable retail, commercial base, or commercial plus price.
Weight Limit: 70 lbs.

Insurance (212.5)

Insured Amount not over	Fee	Insured Amount not over	Fee
$100	No Fee	For document reconstruction insurance or non-document insurance coverage above $800, add $1.00 per $100 or fraction thereof, up to a maximum of $2,499 per shipment.	
200	$1.00		
300	2.00		
400	3.00		
500	4.00		
600	5.00		
700	6.00		
800	7.00	$2,499 max.	$24.00

Value Limit (212.1)

The maximum value of a GXG shipment to this country is $2,499 or a lesser amount if limited by content or value.

Size Limits (211.22)

The surface area of the address side of the item to be mailed must be large enough to completely contain the Global Express Guaranteed Air Waybill/Shipping Invoice (shipping label), postage, endorsement, and any applicable markings. The shipping label is approximately 5.5 inches high and 9.5 inches long.
Maximum length: 46 inches
Maximum width: 35 inches
Maximum height: 46 inches
Maximum length and girth combined: 108 inches

General Conditions for Mailing

See Publication 141, *Global Express Guaranteed Service Guide,* for information about areas served in the destination country, allowable contents, packaging and labeling requirements, tracking and tracing, service standards, and other conditions for mailing.

Express Mail International (220)

Not Available

Priority Mail International (230) Price Group 8

Refer to Notice 123, *Price List*, for the applicable retail, commercial base, or commercial plus price.
Weight Limit: 66 lbs.

Note: *Ordinary Priority Mail International includes indemnity at no cost based on weight. (See 230.)*

Priority Mail International — Flat Rate

Flat Rate Envelopes or Small Flat Rate Priced Boxes: The maximum weight is 4 pounds. Refer to Notice 123, *Price List*, for the applicable retail, commercial base, or commercial plus price.

Flat Rate Boxes — Medium and Large: The maximum weight is 20 pounds, or the limit set by the individual country, whichever is less. Refer to Notice 123, *Price List*, for the retail, commercial base, or commercial plus price.

Insurance (232.92)
Available for **Priority Mail International merchandise parcels** only (see 323.72 for markings)

Insured Amount not over	Fee
$50	$2.45
65 max.	3.60

Size Limits (231.22)
Maximum length: 42 inches
Maximum length and girth combined: 79 inches

First-Class Mail International (240) Price Group 8
For the prices and maximum weights for letters, large envelopes (flats), packages (small packets), and postcards, see Notice 123, *Price List*.

Size Limits
Letters: See 241.212
Postcards: See 241.221
Large Envelopes (Flats): See 241.232
Packages (Small Packets): See 241.242 and 241.243

Airmail M-bags (260) — Direct Sack to One Addressee Price Group 8

Refer to Notice 123, *Price List*, for the applicable retail, commercial base, or commercial plus price.
Weight Limit: 66 lbs.

Matter for the Blind (270)
Free when sent as First-Class Mail International, including Priority Mail International Flat Rate Envelopes and Small Flat Rate Priced Boxes. Weight limit: 4 pounds.
Free when sent as Priority Mail International. Weight limit: 15 pounds.

Extra Services

Certificate of Mailing (313)

Individual Pieces	Fee
Individual article (PS Form 3817)	$1.15
Firm mailing books (PS Form 3877), per article listed (minimum 3)	0.44
Duplicate copy of PS Form 3817 or PS Form 3877 (per page)	1.15
Bulk Quantities	**Fee**
First 1,000 pieces (or fraction thereof)	$6.70
Each additional 1,000 pieces (or fraction thereof)	0.80
Duplicate copy of PS Form 3606	1.15

COD and Certified
NOT for International Mail

International Business Reply Service (382)
Fee: Envelopes up to 2 ounces $1.50; Cards $1.00

International Postal Money Order (371)
NOT Available

International Reply Coupons (381) **Fee:** $2.20

Registered Mail (330) **Fee:** $11.75
Maximum Indemnity: $47.33
Available for First-Class Mail International, including postcards and Flat Rate Envelopes and Small Flat Rate Priced Boxes, and matter for the blind or other physically handicapped persons. Not applicable to M-bags.

Restricted Delivery (350) **Fee:** $4.55
Available for registered mail with a return receipt.
Endorsements: A remettre en main propre.

Return Receipt (340) **Fee:** $2.35
Available for registered mail and insured Priority Mail International parcels only.

Lesotho

Country Conditions for Mailing

Prohibitions (130)
Base or counterfeit coins.
Charged butane gas lighters and refills.
Coins; banknotes; currency notes (paper money); securities payable to bearer; traveler's checks; platinum, gold, and silver (manufactured or not); precious stones; jewelry; and other valuable articles.
Eau de cologne.
Military uniforms and equipment.
Perishable infectious biological substances.
Perishable noninfectious biological substances.
Prison-made goods.
Printed matter relating to football pools.
Radioactive materials.
Used clothing or used articles intended for resale.

Restrictions
No list furnished.

Observations
Invoices must be inserted in all commercial shipments.

Customs Forms Required (123)
First-Class Mail International items and Priority Mail International Flat Rate Envelopes and Small Flat Rate Priced Boxes:
PS Form 2976 (see 123.61)
Priority Mail International parcels:
PS Form 2976-A inside 2976-E (envelope)

Global Express Guaranteed (210) Price Group 4

Refer to Notice 123, *Price List*, for the applicable retail, commercial base, or commercial plus price.
Weight Limit: 70 lbs.

Insurance (212.5)

Insured Amount not over	Fee	Insured Amount not over	Fee
$100	No Fee	For document reconstruction insurance or non-document insurance coverage above $800, add $1.00 per $100 or fraction thereof, up to a maximum of $2,499 per shipment.	
200	$1.00		
300	2.00		
400	3.00		
500	4.00		
600	5.00		
700	6.00		
800	7.00	$2,499 max.	$24.00

Value Limit (212.1)
The maximum value of a GXG shipment to this country is $2,499 or a lesser amount if limited by content or value.

Size Limits (211.22)
The surface area of the address side of the item to be mailed must be large enough to completely contain the Global Express Guaranteed Air Waybill/Shipping Invoice (shipping label), postage, endorsement, and any applicable markings. The shipping label is approximately 5.5 inches high and 9.5 inches long.
Maximum length: 46 inches
Maximum width: 35 inches
Maximum height: 46 inches
Maximum length and girth combined: 108 inches

General Conditions for Mailing
See Publication 141, *Global Express Guaranteed Service Guide,* for information about areas served in the destination country, allowable contents, packaging and labeling requirements, tracking and tracing, service standards, and other conditions for mailing.

Express Mail International (220) Price Group 7

Refer to Notice 123, *Price List*, for the applicable retail, commercial base, or commercial plus price.
Weight Limit: 66 lbs.

Express Mail International — Flat Rate Envelope and Flat Rate Boxes
The maximum weight for the Express Mail International Flat Rate Envelope and the Express Mail International Flat Rate Boxes is 20 pounds. Refer to Notice 123, *Price List*, for the applicable retail, commercial base, or commercial plus price.

Insurance (222.8)
Available for **Express Mail International merchandise shipments** only

Insured Amount not over	Fee	Insured Amount not over	Fee
$100	No Fee	For insurance coverage above $2,000, add $1.50 for each $500 or fraction thereof, up to a maximum of $5,000 per shipment.	
200	$0.85		
500	2.35		
1,000	3.85		
1,500	5.35		
2,000	6.85	$5,000 max.	$15.85

Articles Admitted	Required Customs Form/Endorsement
Correspondence and business papers.	PS Form 2976, *Customs — CN 22 and Sender's Declaration.* Endorse item clearly next to mailing label as BUSINESS PAPERS.
Merchandise samples without commercial value.	PS Form 2976, *Customs — CN 22 and Sender's Declaration.*
Merchandise and all articles subject to customs duty.	PS Form 2976-A, *Customs Declaration and Dispatch Note CP 72,* inside a PS Form 2976-E, *Customs Declaration Envelope CP 91.*

Size Limits (221.52)
Maximum length: 36 inches
Maximum length and girth combined: 79 inches

Note:
Coins; banknotes; currency notes, including paper money; securities of any kind payable to bearer; traveler's checks; platinum, gold, and silver; precious stones; jewelry; watches; and other valuable articles are prohibited in Express Mail International shipments to Lesotho.

Reciprocal Service Name: EMS/Fastmail

Country Code: LS

Areas Served:
Express Mail International is available ***only*** to the following locations:

Butha Buthe	Mohaleshoek
Leribe	Morija
Mafeteng	Quthing
Majara	Roma
Maputsoe	Saint Monica
Maseru	Teyateyaneng
Mazenod	

Priority Mail International (230) Price Group 7

Refer to Notice 123, *Price List*, for the applicable retail, commercial base, or commercial plus price.
Weight Limit: 44 lbs.

Note: *Ordinary Priority Mail International includes indemnity at no cost based on weight. (See 230.)*

Priority Mail International — Flat Rate
Flat Rate Envelopes or Small Flat Rate Priced Boxes: The maximum weight is 4 pounds. Refer to Notice 123, *Price List*, for the applicable retail, commercial base, or commercial plus price.

Flat Rate Boxes — Medium and Large: The maximum weight is 20 pounds, or the limit set by the individual country, whichever is less. Refer to Notice 123, *Price List*, for the retail, commercial base, or commercial plus price.

Insurance (232.92)
Available for **Priority Mail International merchandise parcels** only (see 323.72 for markings)

Insured Amount not over	**Fee**
$50	$2.45
100	3.60
200	4.75
300	5.90
400	7.05
440 max.	8.20

Size Limits (231.22)
Maximum length: 42 inches
Maximum length and girth combined: 79 inches

First-Class Mail International (240) Price Group 7
For the prices and maximum weights for letters, large envelopes (flats), packages (small packets), and postcards, see Notice 123, *Price List*.

Size Limits
Letters: See 241.212
Postcards: See 241.221
Large Envelopes (Flats): See 241.232
Packages (Small Packets): See 241.242 and 241.243

Airmail M-bags (260) — Direct Sack to One Addressee Price Group 7

Refer to Notice 123, *Price List*, for the applicable retail, commercial base, or commercial plus price.
Weight Limit: 66 lbs.

Matter for the Blind (270)
Free when sent as First-Class Mail International, including Priority Mail International Flat Rate Envelopes and Small Flat Rate Priced Boxes. Weight limit: 4 pounds.
Free when sent as Priority Mail International. Weight limit: 15 pounds.

Extra Services

Certificate of Mailing (313)

Individual Pieces	**Fee**
Individual article (PS Form 3817)	$1.15
Firm mailing books (PS Form 3877), per article listed (minimum 3)	0.44
Duplicate copy of PS Form 3817 or PS Form 3877 (per page)	1.15
Bulk Quantities	**Fee**
First 1,000 pieces (or fraction thereof)	$6.70
Each additional 1,000 pieces (or fraction thereof)	0.80
Duplicate copy of PS Form 3606	1.15

COD and Certified **NOT** for International Mail

International Business Reply Service (382)
Fee: Envelopes up to 2 ounces $1.50; Cards $1.00

International Postal Money Order (371)
NOT Available

International Reply Coupons (381) **Fee:** $2.20

Registered Mail (330) **Fee:** $11.75
Maximum Indemnity: $47.33
Available for First-Class Mail International, including postcards and Flat Rate Envelopes and Small Flat Rate Priced Boxes, and matter for the blind or other physically handicapped persons. Not applicable to M-bags.

Restricted Delivery (350) NOT Available

Return Receipt (340) **Fee:** $2.35
Available for registered mail and insured Priority Mail International parcels only.

Liberia

Country Conditions for Mailing

Prohibitions (130)
Coins; banknotes; currency notes (paper money); securities payable to bearer; traveler's checks, platinum, gold or silver, manufactured or not; precious stones; jewelry; and other valuable articles unless sent in insured Priority Mail International.

Restrictions
Pharmaceutical products are admitted only under prior permit from the National Public Health Dept., Official Bag 9009, Monrovia.

Observations
None

Customs Forms Required (123)
First-Class Mail International items and Priority Mail International Flat Rate Envelopes and Small Flat Rate Priced Boxes:
PS Form 2976 (see 123.61)
Priority Mail International parcels:
PS Form 2976-A inside 2976-E (envelope)

Global Express Guaranteed (210) Price Group 4

Refer to Notice 123, *Price List*, for the applicable retail, commercial base, or commercial plus price.
Weight Limit: 70 lbs.

Insurance (212.5)

Insured Amount not over	Fee	Insured Amount not over	Fee
$100	No Fee	For document reconstruction insurance or non-document insurance coverage above $800, add $1.00 per $100 or fraction thereof, up to a maximum of $2,499 per shipment.	
200	$1.00		
300	2.00		
400	3.00		
500	4.00		
600	5.00		
700	6.00		
800	7.00	$2,499 max.	$24.00

Value Limit (212.1)
The maximum value of a GXG shipment to this country is $2,499 or a lesser amount if limited by content or value.

Size Limits (211.22)
The surface area of the address side of the item to be mailed must be large enough to completely contain the Global Express Guaranteed Air Waybill/Shipping Invoice (shipping label), postage, endorsement, and any applicable markings. The shipping label is approximately 5.5 inches high and 9.5 inches long.
Maximum length: 46 inches
Maximum width: 35 inches
Maximum height: 46 inches
Maximum length and girth combined: 108 inches

General Conditions for Mailing
See Publication 141, *Global Express Guaranteed Service Guide,* for information about areas served in the destination country, allowable contents, packaging and labeling requirements, tracking and tracing, service standards, and other conditions for mailing.

Express Mail International (220) Price Group 7

Refer to Notice 123, *Price List*, for the applicable retail, commercial base, or commercial plus price.
Weight Limit: 44 lbs.

Express Mail International — Flat Rate Envelope and Flat Rate Boxes
The maximum weight for the Express Mail International Flat Rate Envelope and the Express Mail International Flat Rate Boxes is 20 pounds. Refer to Notice 123, *Price List*, for the applicable retail, commercial base, or commercial plus price.

Insurance (222.8)
Available for **Express Mail International merchandise shipments** only

Insured Amount not over	Fee	Insured Amount not over	Fee
$100	No Fee	For insurance coverage above $2,000, add $1.50 for each $500 or fraction thereof, up to a maximum of $5,000 per shipment.	
200	$0.85		
500	2.35		
1,000	3.85		
1,500	5.35		
2,000	6.85	$5,000 max.	$15.85

Articles Admitted	Required Customs Form/Endorsement
Correspondence and business papers.	PS Form 2976, *Customs — CN 22 and Sender's Declaration.* Endorse item clearly next to mailing label as BUSINESS PAPERS.
Merchandise samples without commercial value.	PS Form 2976, *Customs — CN 22 and Sender's Declaration.*
Merchandise and all articles subject to customs duty.	PS Form 2976-A, *Customs Declaration and Dispatch Note CP 72,* inside a PS Form 2976-E, *Customs Declaration Envelope CP 91.* A commercial invoice must be included with all commercial shipments.

Size Limits (221.52)
Maximum length: 36 inches
Maximum length and girth combined: 79 inches

Note:
Coins; banknotes; currency notes, including paper money; securities of any kind payable to bearer; traveler's checks; platinum, gold, and silver; precious stones; jewelry; watches; and other valuable articles are prohibited in Express Mail International shipments to Liberia.

Reciprocal Service Name: Express Mail Service

Country Code: LR

Areas Served:
Express Mail International is available ***only*** to the following location:
Monrovia

Priority Mail International (230) Price Group 7

Refer to Notice 123, *Price List*, for the applicable retail, commercial base, or commercial plus price.
Weight Limit: 44 lbs.

Note: *Ordinary Priority Mail International includes indemnity at no cost based on weight. (See 230.)*

Priority Mail International — Flat Rate

Flat Rate Envelopes or Small Flat Rate Priced Boxes: The maximum weight is 4 pounds. Refer to Notice 123, *Price List*, for the applicable retail, commercial base, or commercial plus price.

Flat Rate Boxes — Medium and Large: The maximum weight is 20 pounds, or the limit set by the individual country, whichever is less. Refer to Notice 123, *Price List*, for the retail, commercial base, or commercial plus price.

Insurance (232.92)

Available for **Priority Mail International merchandise parcels** only (see 323.72 for markings)

Insured Amount not over	**Fee**
$50	$2.45
100	3.60
200	4.75
300	5.90
400	7.05
440 max.	8.20

Size Limits (231.22)

Maximum length: 42 inches
Maximum length and girth combined: 79 inches

First-Class Mail International (240) Price Group 7

For the prices and maximum weights for letters, large envelopes (flats), packages (small packets), and postcards, see Notice 123, *Price List*.

Size Limits

Letters: See 241.212
Postcards: See 241.221
Large Envelopes (Flats): See 241.232
Packages (Small Packets): See 241.242 and 241.243

Airmail M-bags (260) — Direct Sack to One Addressee Price Group 7

Refer to Notice 123, *Price List*, for the applicable retail, commercial base, or commercial plus price.
Weight Limit: 66 lbs.

Matter for the Blind (270) NOT Available

Extra Services

Certificate of Mailing (313)

Individual Pieces	**Fee**
Individual article (PS Form 3817)	$1.15
Firm mailing books (PS Form 3877), per article listed (minimum 3)	0.44
Duplicate copy of PS Form 3817 or PS Form 3877 (per page)	1.15
Bulk Quantities	**Fee**
First 1,000 pieces (or fraction thereof)	$6.70
Each additional 1,000 pieces (or fraction thereof)	0.80
Duplicate copy of PS Form 3606	1.15

COD and Certified **NOT** for International Mail

International Business Reply Service (382)

Fee: Envelopes up to 2 ounces $1.50; Cards $1.00

International Postal Money Order (371)

NOT Available

International Reply Coupons (381) **Fee:** $2.20

Registered Mail (330) **Fee:** $11.75

Maximum Indemnity: $47.33
Available for First-Class Mail International, including postcards and Flat Rate Envelopes and Small Flat Rate Priced Boxes, and matter for the blind or other physically handicapped persons. Not applicable to M-bags.

Restricted Delivery (350) **Fee:** $4.55

Available for registered mail with a return receipt.
Endorsements: A remettre en main propre.

Return Receipt (340) **Fee:** $2.35

Available for registered mail and insured Priority Mail International parcels only.

Libya

Country Conditions for Mailing

Prohibitions (130)

Arms (other than sporting guns).
Coins; banknotes; currency notes (paper money); securities of all kinds payable to bearer; traveler's checks; platinum, gold or silver, manufactured or not; precious stones; jewelry; and other valuable articles.
Perishable infectious biological substances.
Radioactive materials.
Tea, salt.
Tobacco in any form.

Restrictions

Special authorization is required for plant material including seeds, salt, saccharine, sporting guns, serums, and vaccines.

Observations

1. Import licenses are required for all shipments intended for commercial purposes. However, an import permit is not necessary for shipments containing goods whose value does not exceed 5 Libyan Dinar. Every shipment containing goods for sale must be accompanied by an invoice, in duplicate, dated and signed by the sender.
2. Commercial shipments should be accompanied by a certificate of origin from the dispatching firm that the contents of the shipments contain only goods of a commercial nature.
3. In accordance with Executive Order 12543 of January 7, 1986, merchandise is limited to donations of articles of food, clothing, medicines, and medical supplies that are intended strictly for medical purposes. First-Class Mail International items including postcards and International Priority Airmail (IPA) items are subject to the content restriction. ISAL service is suspended because transportation is not available.

Customs Forms Required (123)

First-Class Mail International items and Priority Mail International Flat Rate Envelopes and Small Flat Rate Priced Boxes:
PS Form 2976 (see 123.61)
Priority Mail International parcels:
PS Form 2976-A inside 2976-E (envelope)

Global Express Guaranteed (210) Price Group 4

Refer to Notice 123, *Price List*, for the applicable retail, commercial base, or commercial plus price.
Weight Limit: 70 lbs.

Insurance (212.5)

Insured Amount not over	Fee	Insured Amount not over	Fee
$100	No Fee	For document reconstruction insurance or non-document insurance coverage above $800, add $1.00 per $100 or fraction thereof, up to a maximum of $2,499 per shipment.	
200	$1.00		
300	2.00		
400	3.00		
500	4.00		
600	5.00		
700	6.00		
800	7.00	$2,499 max.	$24.00

Value Limit (212.1)

The maximum value of a GXG shipment to this country is $2,499 or a lesser amount if limited by content or value.

Size Limits (211.22)

The surface area of the address side of the item to be mailed must be large enough to completely contain the Global Express Guaranteed Air Waybill/Shipping Invoice (shipping label), postage, endorsement, and any applicable markings. The shipping label is approximately 5.5 inches high and 9.5 inches long.
Maximum length: 46 inches
Maximum width: 35 inches
Maximum height: 46 inches
Maximum length and girth combined: 108 inches

General Conditions for Mailing

See Publication 141, *Global Express Guaranteed Service Guide,* for information about areas served in the destination country, allowable contents, packaging and labeling requirements, tracking and tracing, service standards, and other conditions for mailing.

Express Mail International (220)

Not Available

Priority Mail International (230) Price Group 8

Refer to Notice 123, *Price List*, for the applicable retail, commercial base, or commercial plus price.
Weight Limit: 44 lbs.

Note: *Ordinary Priority Mail International includes indemnity at no cost based on weight. (See 230.)*

Priority Mail International — Flat Rate

Flat Rate Envelopes or Small Flat Rate Priced Boxes: The maximum weight is 4 pounds. Refer to Notice 123, *Price List*, for the applicable retail, commercial base, or commercial plus price.

Flat Rate Boxes — Medium and Large: The maximum weight is 20 pounds, or the limit set by the individual country, whichever is less. Refer to Notice 123, *Price List*, for the retail, commercial base, or commercial plus price.

Insurance (232.92) NOT Available

Size Limits (231.22)

Maximum length: 42 inches
Maximum length and girth combined: 79 inches

First-Class Mail International (240) Price Group 8

For the prices and maximum weights for letters, large envelopes (flats), packages (small packets), and postcards, see Notice 123, *Price List*.

Size Limits

Letters: See 241.212
Postcards: See 241.221
Large Envelopes (Flats): See 241.232
Packages (Small Packets): See 241.242 and 241.243

Airmail M-bags (260) — Direct Sack to One Addressee Price Group 8

Refer to Notice 123, *Price List*, for the applicable retail, commercial base, or commercial plus price.
Weight Limit: 66 lbs.

Matter for the Blind (270) NOT Available

Extra Services

Certificate of Mailing (313)

Individual Pieces	Fee
Individual article (PS Form 3817)	$1.15
Firm mailing books (PS Form 3877), per article listed (minimum 3)	0.44
Duplicate copy of PS Form 3817 or PS Form 3877 (per page)	1.15
Bulk Quantities	**Fee**
First 1,000 pieces (or fraction thereof)	$6.70
Each additional 1,000 pieces (or fraction thereof)	0.80
Duplicate copy of PS Form 3606	1.15

COD and Certified

NOT for International Mail

International Business Reply Service (382)

Fee: Envelopes up to 2 ounces $1.50; Cards $1.00

International Postal Money Order (371)

NOT Available

International Reply Coupons (381)

Fee: $2.20

Registered Mail (330)

Fee: $11.75

Maximum Indemnity: $47.33
Available for First-Class Mail International, including postcards and Flat Rate Envelopes and Small Flat Rate Priced Boxes, and matter for the blind or other physically handicapped persons. Not applicable to M-bags.

Restricted Delivery (350)

NOT Available

Return Receipt (340)

Fee: $2.35

Available for registered mail only.

Liechtenstein

Country Conditions for Mailing

Prohibitions (130)

Arms and weapons.
Firing caps and loaded metal cartridges for portable firearms, nonexplosive parts of artillery fuses, flammable films, or articles made of celluloid.
Human remains.
Live plants and animals.
Lottery tickets and advertisements for lotteries.
Mini-spies (miniature wireless transmitters).
Radar detectors.

Restrictions

No list furnished.

Observations

1. A parcel may be addressed to a street address or to a post office box. A local telephone number for the addressee should be provided when the item is addressed to a street address and must be provided when the item is addressed to a post office box.
2. For parcels, an invoice, in duplicate, is required for all commercial shipments regardless of value and all personal shipments valued at $300 or more. The invoices must be affixed to the outside of the parcel or may be enclosed in PS Form 2976-E with the customs declaration.
3. A letter or card fully prepaid and bearing the same address as that of a Priority Mail International parcel may be tied to or otherwise securely attached to the outside of the parcel in such manner as to prevent its separation therefrom and not to interfere with the address of the parcel. Stamps to cover postage on the parcel must be affixed to the wrapper of the parcel. Stamps to pay postage on the letter must be affixed to the envelope thereof, or in the case of a postcard, to the address side of the card, preferably the upper-right portion. Priority Mail International parcels to which such letters or cards are attached are treated as parcel post.

Customs Forms Required (123)

First-Class Mail International items and Priority Mail International Flat Rate Envelopes and Small Flat Rate Priced Boxes:
PS Form 2976 (see 123.61)
Priority Mail International parcels:
PS Form 2976-A inside 2976-E (envelope)

Global Express Guaranteed (210) Price Group 5

Refer to Notice 123, *Price List*, for the applicable retail, commercial base, or commercial plus price.
Weight Limit: 70 lbs.

Insurance (212.5)

Insured Amount not over	Fee	Insured Amount not over	Fee
$100	No Fee	For document reconstruction insurance or non-document insurance coverage above $800, add $1.00 per $100 or fraction thereof, up to a maximum of $2,499 per shipment.	
200	$1.00		
300	2.00		
400	3.00		
500	4.00		
600	5.00		
700	6.00		
800	7.00	$2,499 max.	$24.00

Value Limit (212.1)

The maximum value of a GXG shipment to this country is $2,499 or a lesser amount if limited by content or value.

Size Limits (211.22)

The surface area of the address side of the item to be mailed must be large enough to completely contain the Global Express Guaranteed Air Waybill/Shipping Invoice (shipping label), postage, endorsement, and any applicable markings. The shipping label is approximately 5.5 inches high and 9.5 inches long.
Maximum length: 46 inches
Maximum width: 35 inches
Maximum height: 46 inches
Maximum length and girth combined: 108 inches

General Conditions for Mailing

See Publication 141, *Global Express Guaranteed Service Guide,* for information about areas served in the destination country, allowable contents, packaging and labeling requirements, tracking and tracing, service standards, and other conditions for mailing.

Express Mail International (220) Price Group 5

Refer to Notice 123, *Price List*, for the applicable retail, commercial base, or commercial plus price.
Weight Limit: 66 lbs.

Express Mail International — Flat Rate Envelope and Flat Rate Boxes

The maximum weight for the Express Mail International Flat Rate Envelope and the Express Mail International Flat Rate Boxes is 20 pounds. Refer to Notice 123, *Price List*, for the applicable retail, commercial base, or commercial plus price.

Insurance (222.8)

Available for **Express Mail International merchandise shipments** only

Insured Amount not over	Fee	Insured Amount not over	Fee
$100	No Fee	For insurance coverage above $2,000, add $1.50 for each $500 or fraction thereof, up to a maximum of $5,000 per shipment.	
200	$0.85		
500	2.35		
1,000	3.85		
1,500	5.35		
2,000	6.85	$5,000 max.	$15.85

Articles Admitted	Required Customs Form/Endorsement
Business correspondence and commercial papers/documents.	No form required. Endorse item clearly next to mailing label as BUSINESS PAPERS.
Samples of merchandise without commercial value.	PS Form 2976, *Customs — CN 22 and Sender's Declaration.*
Merchandise and all articles subject to customs duty.	PS Form 2976-A, *Customs Declaration and Dispatch Note CP 72,* inside a PS Form 2976-E, *Customs Declaration Envelope CP 91.* An invoice, in duplicate, is required for all commercial shipments regardless of value and all personal shipments valued at $300 or more. The invoices must be either affixed to the outside of the parcel or enclosed in PS Form 2976-E with the customs declaration.

Size Limits (221.52)
Maximum length: 60 inches
Maximum length and girth combined: 108 inches

Notes:
1. An invoice, in duplicate, is required for all commercial shipments regardless of value and for all personal shipments valued at $300 or more. The invoices must be either affixed to the outside of the parcel or enclosed in PS Form 2976-E with the customs declaration.
2. Arms, weapons, and human remains are prohibited.
3. Coins; banknotes; currency notes, including paper money; securities of any kind payable to bearer; traveler's checks; platinum, gold, and silver; precious stones; jewelry; watches; and other valuable articles are prohibited in Express Mail International shipments to Liechtenstein.
4. An Express Mail International shipment may be addressed to a street address or to a post office box. A local telephone number for the addressee should be provided when the item is addressed to a street address and must be provided when the item is addressed to a post office box.

Reciprocal Service Name: International Rapid Service

Country Code: LI

Areas Served:
All points in Liechtenstein are served. Liechtenstein is served through Switzerland.

Priority Mail International (230) Price Group 5

Refer to Notice 123, *Price List*, for the applicable retail, commercial base, or commercial plus price.
Weight Limit: 66 lbs.

Note: *Ordinary Priority Mail International includes indemnity at no cost based on weight. (See 230.)*

Priority Mail International — Flat Rate
Flat Rate Envelopes or Small Flat Rate Priced Boxes: The maximum weight is 4 pounds. Refer to Notice 123, *Price List*, for the applicable retail, commercial base, or commercial plus price.

Flat Rate Boxes — Medium and Large: The maximum weight is 20 pounds, or the limit set by the individual country, whichever is less. Refer to Notice 123, *Price List*, for the retail, commercial base, or commercial plus price.

Insurance (232.92)
Available for **Priority Mail International merchandise parcels** only (see 323.72 for markings)

Insured Amount not over	Fee	Insured Amount not over	Fee
$50	$2.45	Add $1.15 for each additional $100 or fraction of insurance coverage.	
100	3.60		
200	4.75		
300	5.90		
400	7.05		
500	8.20	$5,000 max.	$59.95

Size Limits (231.22)
Maximum length: 60 inches
Maximum length and girth combined: 108 inches

First-Class Mail International (240) Price Group 5
For the prices and maximum weights for letters, large envelopes (flats), packages (small packets), and postcards, see Notice 123, *Price List*.

Size Limits
Letters: See 241.212
Postcards: See 241.221
Large Envelopes (Flats): See 241.232
Packages (Small Packets): See 241.242 and 241.243

Airmail M-bags (260) — Direct Sack to One Addressee Price Group 5

Refer to Notice 123, *Price List*, for the applicable retail, commercial base, or commercial plus price.
Weight Limit: 66 lbs.

Matter for the Blind (270)
Free when sent as First-Class Mail International, including Priority Mail International Flat Rate Envelopes and Small Flat Rate Priced Boxes. Weight limit: 4 pounds.
Free when sent as Priority Mail International. Weight limit: 15 pounds.

Extra Services

Certificate of Mailing (313)

Individual Pieces	Fee
Individual article (PS Form 3817)	$1.15
Firm mailing books (PS Form 3877), per article listed (minimum 3)	0.44
Duplicate copy of PS Form 3817 or PS Form 3877 (per page)	1.15
Bulk Quantities	**Fee**
First 1,000 pieces (or fraction thereof)	$6.70
Each additional 1,000 pieces (or fraction thereof)	0.80
Duplicate copy of PS Form 3606	1.15

COD and Certified **NOT** for International Mail

International Business Reply Service (382)
Fee: Envelopes up to 2 ounces $1.50; Cards $1.00

International Postal Money Order (371)
NOT Available

International Reply Coupons (381) **Fee:** $2.20

Registered Mail (330) **Fee:** $11.75
Maximum Indemnity: $47.33
Available for First-Class Mail International, including postcards and Flat Rate Envelopes and Small Flat Rate Priced Boxes, and matter for the blind or other physically handicapped persons. Not applicable to M-bags.

Restricted Delivery (350) **Fee:** $4.55
Available for registered mail with a return receipt.
Endorsements: A remettre en main propre.

Return Receipt (340) **Fee:** $2.35
Available for registered mail and insured Priority Mail International parcels only.

Lithuania

Country Conditions for Mailing

Prohibitions (130)

Arms, ammunitions, and parts and accessories; all types of hunting and sporting guns, crossbows, pneumatic and fighting weapons, gas pistols, and gas bombs.
Articles whose nature and packaging may constitute a danger to postal employees or that may spoil or damage other postal items.
Articles with immoral inscriptions and pictures.
Coins; bank notes; currency notes (paper money) except quantities sent by the National Bank of Lithuania and its institutions; securities of any kind payable to bearer; traveler's checks; platinum, gold, and silver (manufactured or not); precious metals and precious stones, including scrap and waste from such items; jewelry; and other valuable articles are prohibited in all classes of mail, including Express Mail International shipments, that are sent to Lithuania.
Explosive, combustible, and dangerous materials.
Narcotic, psychotropic, and toxic substances and equipment for using them.
Nonprecious metals, their alloys, wastes, and scrap.
Perishable infectious biological substances.
Perishable noninfectious biological substances.
Prepared foodstuffs and raw materials of animal origin if their industrial packaging is damaged, the use-by-date has expired, or the sensory features (i.e., smell, taste, and touch) have been altered.
Radioactive materials.
Tobacco and manufactured tobacco substitutes, except it is permitted to send 200 cigarettes or 250 g. of tobacco, or an assortment of these products, provided the gross weight does not exceed 250 g. (8.8 ounces).
Watch straps, watch bands, and watch bracelets, and parts thereof, of precious metal or of metal clad with precious metal whether or not gold-plated or silver-plated.

Restrictions

Articles subject to customs duty may not be sent in ordinary or registered First-Class Mail International items, including the Priority Mail International Flat Rate Envelope and Small Flat Rate Priced Boxes.
Firearms (categories B, C, and D), ammunition, special surveillance and security equipment, crime-fighting instruments/equipment, and civilian pyrotechnic articles can be sent only with authorization from the Police Department of the Ministry of Home Affairs.
Objects of cultural value, works of art, and antiques may be sent only with a permit from the Ministry of Culture's Department of the Protection of Objects of Cultural Value.
Radio-electronic apparatus and electrical equipment that may emit radio waves require authorization from the National Electrical Equipment and Communications Inspectorate.
Sugar may not exceed 5 kg. (11 pounds) per shipment.

Observations

A value-added tax (VAT) will be applied to books, newspapers, and periodicals.

Customs Forms Required (123)

First-Class Mail International items and Priority Mail International Flat Rate Envelopes and Small Flat Rate Priced Boxes:
PS Form 2976 (see 123.61)
Priority Mail International parcels:
PS Form 2976-A inside 2976-E (envelope)

Global Express Guaranteed (210) Price Group 4

Refer to Notice 123, *Price List*, for the applicable retail, commercial base, or commercial plus price.

Weight Limit: 70 lbs.

Insurance (212.5)

Insured Amount not over	Fee	Insured Amount not over	Fee
$100	No Fee	For document reconstruction insurance or non-document insurance coverage above $800, add $1.00 per $100 or fraction thereof, up to a maximum of $2,499 per shipment.	
200	$1.00		
300	2.00		
400	3.00		
500	4.00		
600	5.00		
700	6.00		
800	7.00	$2,499 max.	$24.00

Value Limit (212.1)

The maximum value of a GXG shipment to this country is $2,499 or a lesser amount if limited by content or value.

Size Limits (211.22)

The surface area of the address side of the item to be mailed must be large enough to completely contain the Global Express Guaranteed Air Waybill/Shipping Invoice (shipping label), postage, endorsement, and any applicable markings. The shipping label is approximately 5.5 inches high and 9.5 inches long.
Maximum length: 46 inches
Maximum width: 35 inches
Maximum height: 46 inches
Maximum length and girth combined: 108 inches

General Conditions for Mailing

See Publication 141, *Global Express Guaranteed Service Guide,* for information about areas served in the destination country, allowable contents, packaging and labeling requirements, tracking and tracing, service standards, and other conditions for mailing.

Express Mail International (220) Price Group 4

Refer to Notice 123, *Price List*, for the applicable retail, commercial base, or commercial plus price.

Weight Limit: 70 lbs.

Express Mail International — Flat Rate Envelope and Flat Rate Boxes

The maximum weight for the Express Mail International Flat Rate Envelope and the Express Mail International Flat Rate Boxes is 20 pounds. Refer to Notice 123, *Price List*, for the applicable retail, commercial base, or commercial plus price.

Insurance (222.8)

Available for **Express Mail International merchandise shipments** only

Insured Amount not over	Fee	Insured Amount not over	Fee
$100	No Fee	For insurance coverage above $2,000, add $1.50 for each $500 or fraction thereof, up to a maximum of $5,000 per shipment.	
200	$0.85		
500	2.35		
1,000	3.85		
1,500	5.35		
2,000	6.85	$5,000 max.	$15.85

Articles Admitted	Required Customs Form/Endorsement
Correspondence and business papers.	PS Form 2976, *Customs — CN 22 and Sender's Declaration.* Endorse item clearly next to mailing label as BUSINESS PAPERS.
Merchandise samples without commercial value.	PS Form 2976, *Customs — CN 22 and Sender's Declaration.*
Merchandise and all articles subject to customs duty.	PS Form 2976-A, *Customs Declaration and Dispatch Note CP 72,* inside a PS Form 2976-E, *Customs Declaration Envelope CP 91.*

Size Limits (221.52)
Maximum length: 36 inches
Maximum length and girth combined: 79 inches

Note:
Coins; banknotes; currency notes, including paper money; securities of any kind payable to bearer; traveler's checks; platinum, gold, and silver; precious stones; jewelry; watches; and other valuable articles are prohibited in Express Mail International shipments to Lithuania.

Reciprocal Service Name: EMS

Country Code: LT

Areas Served: All

Priority Mail International (230) Price Group 4

Refer to Notice 123, *Price List*, for the applicable retail, commercial base, or commercial plus price.
Weight Limit: 70 lbs.

Note: *Ordinary Priority Mail International includes indemnity at no cost based on weight. (See 230.)*

Priority Mail International — Flat Rate
Flat Rate Envelopes or Small Flat Rate Priced Boxes: The maximum weight is 4 pounds. Refer to Notice 123, *Price List*, for the applicable retail, commercial base, or commercial plus price.

Flat Rate Boxes — Medium and Large: The maximum weight is 20 pounds, or the limit set by the individual country, whichever is less. Refer to Notice 123, *Price List*, for the retail, commercial base, or commercial plus price.

Insurance (232.92)
Available for **Priority Mail International merchandise parcels** only (see 323.72 for markings)

Insured Amount not over	Fee	Insured Amount not over	Fee
$50	$2.45		
100	3.60	Add $1.15 for each additional $100 or fraction of insurance coverage.	
200	4.75		
300	5.90		
400	7.05		
500	8.20	$5,000 max.	$59.95

Size Limits (231.22)
Maximum length: 42 inches
Maximum length and girth combined: 79 inches

First-Class Mail International (240) Price Group 4
For the prices and maximum weights for letters, large envelopes (flats), packages (small packets), and postcards, see Notice 123, *Price List*.

Size Limits
Letters: See 241.212
Postcards: See 241.221
Large Envelopes (Flats): See 241.232
Packages (Small Packets): See 241.242 and 241.243

Airmail M-bags (260) — Direct Sack to One Addressee Price Group 4

Refer to Notice 123, *Price List*, for the applicable retail, commercial base, or commercial plus price.
Weight Limit: 66 lbs.

Matter for the Blind (270)
Free when sent as First-Class Mail International, including Priority Mail International Flat Rate Envelopes and Small Flat Rate Priced Boxes. Weight limit: 4 pounds.
Free when sent as Priority Mail International. Weight limit: 15 pounds.

Extra Services

Certificate of Mailing (313)

Individual Pieces	Fee
Individual article (PS Form 3817)	$1.15
Firm mailing books (PS Form 3877), per article listed (minimum 3)	0.44
Duplicate copy of PS Form 3817 or PS Form 3877 (per page)	1.15
Bulk Quantities	**Fee**
First 1,000 pieces (or fraction thereof)	$6.70
Each additional 1,000 pieces (or fraction thereof)	0.80
Duplicate copy of PS Form 3606	1.15

COD and Certified **NOT** for International Mail

International Business Reply Service (382)
Fee: Envelopes up to 2 ounces $1.50; Cards $1.00

International Postal Money Order (371)
NOT Available

International Reply Coupons (381) **Fee:** $2.20

Registered Mail (330) **Fee:** $11.75
Maximum Indemnity: $47.33
Available for First-Class Mail International, including postcards and Flat Rate Envelopes and Small Flat Rate Priced Boxes, and matter for the blind or other physically handicapped persons. Not applicable to M-bags.

Restricted Delivery (350) **Fee:** $4.55
Available for registered mail with a return receipt.
Endorsements: A remettre en main propre.

Return Receipt (340) **Fee:** $2.35
Available for registered mail and insured Priority Mail International parcels only.

Luxembourg

Country Conditions for Mailing

Prohibitions (130)

Air guns, daggers, sword canes, loaded canes, and other hidden or secret defensive weapons.
Arms and weapons.
Human remains.
Live plants and animals.
Lottery tickets, as well as printed papers, advertisements, posters, etc., relating to lotteries or sweepstakes.
Perishable infectious biological substances.
Postcards embellished with fabrics, embroidery, metal, spangles, or similar materials except in sealed envelopes.
Printed pamphlets, without indication of the name of the printer.
Radioactive materials.

Restrictions

An import license is required for the importation of a number of agricultural; textile; iron and steel; and general products. Therefore, the sender should ascertain from the addressee before mailing whether the necessary documents are held.
Coins; banknotes; currency notes (paper money); securities payable to bearer; traveler's checks; platinum, gold or silver, manufactured or not; precious stones; jewelry; and other valuable articles may only be sent in insured Priority Mail International parcels. These articles are not admitted in First-Class Mail International shipments, including the Priority Mail International Flat Rate Envelope.
Special authorization is required for plants, fruit, seeds, meat, and meat products for commercial purposes, saccharine and similar substances.

Observations

1. A parcel may be addressed to a street address or to a post office box. A local telephone number for the addressee should be provided when the item is addressed to a street address and must be provided when the item is addressed to a post office box.
2. For Priority Mail International parcels, an invoice, in duplicate, is required for all commercial shipments regardless of value and all personal shipments valued at $300 or more. The invoices must be affixed to the outside of the parcel or may be enclosed in PS Form 2976-E with the customs declaration.

Customs Forms Required (123)

First-Class Mail International items and Priority Mail International Flat Rate Envelopes and Small Flat Rate Priced Boxes:
PS Form 2976 (see 123.61)
Priority Mail International parcels:
PS Form 2976-A inside 2976-E (envelope)

Global Express Guaranteed (210) Price Group 3

Refer to Notice 123, *Price List*, for the applicable retail, commercial base, or commercial plus price.
Weight Limit: 70 lbs.

Insurance (212.5)

Insured Amount not over	Fee	Insured Amount not over	Fee
$100	No Fee	For document reconstruction insurance or non-document insurance coverage above $800, add $1.00 per $100 or fraction thereof, up to a maximum of $2,499 per shipment.	
200	$1.00		
300	2.00		
400	3.00		
500	4.00		
600	5.00		
700	6.00		
800	7.00	$2,499 max.	$24.00

Value Limit (212.1)

The maximum value of a GXG shipment to this country is $2,499 or a lesser amount if limited by content or value.

Size Limits (211.22)

The surface area of the address side of the item to be mailed must be large enough to completely contain the Global Express Guaranteed Air Waybill/Shipping Invoice (shipping label), postage, endorsement, and any applicable markings. The shipping label is approximately 5.5 inches high and 9.5 inches long.
Maximum length: 46 inches
Maximum width: 35 inches
Maximum height: 46 inches
Maximum length and girth combined: 108 inches

General Conditions for Mailing

See Publication 141, *Global Express Guaranteed Service Guide,* for information about areas served in the destination country, allowable contents, packaging and labeling requirements, tracking and tracing, service standards, and other conditions for mailing.

Express Mail International (220) Price Group 5

Refer to Notice 123, *Price List*, for the applicable retail, commercial base, or commercial plus price.
Weight Limit: 66 lbs.

Express Mail International — Flat Rate Envelope and Flat Rate Boxes

The maximum weight for the Express Mail International Flat Rate Envelope and the Express Mail International Flat Rate Boxes is 20 pounds. Refer to Notice 123, *Price List*, for the applicable retail, commercial base, or commercial plus price.

Insurance (222.8)

Available for **Express Mail International merchandise shipments** only

Insured Amount not over	Fee
$100	No Fee
200	$0.85
500	2.35
650 max.	3.85

Articles Admitted	Required Customs Form/Endorsement
Business documents, business letters, and commercial papers.	PS Form 2976, *Customs — CN 22 and Sender's Declaration.*
Merchandise samples without commercial value, microfilm, magnetic tapes, and microfiche.	PS Form 2976, *Customs — CN 22 and Sender's Declaration.*
Merchandise and all articles subject to customs duty.	PS Form 2976-A, *Customs Declaration and Dispatch Note CP 72,* inside a PS Form 2976-E, *Customs Declaration Envelope CP 91*. An invoice, in duplicate, is required for all commercial shipments regardless of value and all personal shipments valued at $300 or more. The invoices must be either affixed to the outside of the parcel or enclosed in PS Form 2976-E with the customs declaration.

Size Limits (221.52)
Maximum length: 60 inches
Maximum length and girth combined: 108 inches

Notes:
1. An invoice, in duplicate, is required for all commercial shipments regardless of value and for all personal shipments valued at $300 or more. The invoices must be either affixed to the outside of the parcel or enclosed in PS Form 2976-E with the customs declaration.
2. Arms, weapons, and human remains are prohibited.
3. Coins; banknotes; currency notes, including paper money; securities of any kind payable to bearer; traveler's checks; platinum, gold, and silver; precious stones; jewelry; watches; and other valuable articles are prohibited in Express Mail International shipments to Luxembourg.
4. An Express International shipment may be addressed to a street address or to a post office box. A local telephone number for the addressee should be provided when the item is addressed to a street address and must be provided when the item is addressed to a post office box.

Reciprocal Service Name: Datapost

Country Code: LU

Areas Served: All

Priority Mail International (230) Price Group 5

Refer to Notice 123, *Price List*, for the applicable retail, commercial base, or commercial plus price.
Weight Limit: 66 lbs.

Note: *Ordinary Priority Mail International includes indemnity at no cost based on weight. (See 230.)*

Priority Mail International — Flat Rate
Flat Rate Envelopes or Small Flat Rate Priced Boxes: The maximum weight is 4 pounds. Refer to Notice 123, *Price List*, for the applicable retail, commercial base, or commercial plus price.

Flat Rate Boxes — Medium and Large: The maximum weight is 20 pounds, or the limit set by the individual country, whichever is less. Refer to Notice 123, *Price List*, for the retail, commercial base, or commercial plus price.

Insurance (232.92)
Available for **Priority Mail International merchandise parcels** only (see 323.72 for markings)

Insured Amount not over	Fee
$50	$2.45
100	3.60
200	4.75
300	5.90
400	7.05
500	8.20
600	9.35
650 max.	10.50

Size Limits (231.22)
Maximum length: 60 inches
Maximum length and girth combined: 108 inches

First-Class Mail International (240) Price Group 5
For the prices and maximum weights for letters, large envelopes (flats), packages (small packets), and postcards, see Notice 123, *Price List*.

Size Limits
Letters: See 241.212
Postcards: See 241.221
Large Envelopes (Flats): See 241.232
Packages (Small Packets): See 241.242 and 241.243

Airmail M-bags (260) — Direct Sack to One Addressee Price Group 5

Refer to Notice 123, *Price List*, for the applicable retail, commercial base, or commercial plus price.
Weight Limit: 66 lbs.

Matter for the Blind (270)
Free when sent as First-Class Mail International, including Priority Mail International Flat Rate Envelopes and Small Flat Rate Priced Boxes. Weight limit: 4 pounds.
Free when sent as Priority Mail International. Weight limit: 15 pounds.

Extra Services

Certificate of Mailing (313)

Individual Pieces	Fee
Individual article (PS Form 3817)	$1.15
Firm mailing books (PS Form 3877), per article listed (minimum 3)	0.44
Duplicate copy of PS Form 3817 or PS Form 3877 (per page)	1.15
Bulk Quantities	**Fee**
First 1,000 pieces (or fraction thereof)	$6.70
Each additional 1,000 pieces (or fraction thereof)	0.80
Duplicate copy of PS Form 3606	1.15

COD and Certified

NOT for International Mail

International Business Reply Service (382)

Fee: Envelopes up to 2 ounces $1.50; Cards $1.00

International Postal Money Order (371)

NOT Available

International Reply Coupons (381)

Fee: $2.20

Registered Mail (330)

Fee: $11.75

Maximum Indemnity: $47.33
Available for First-Class Mail International, including postcards and Flat Rate Envelopes and Small Flat Rate Priced Boxes, and matter for the blind or other physically handicapped persons. Not applicable to M-bags.

Restricted Delivery (350)

Fee: $4.55

Available for registered mail with a return receipt.
Endorsements: A remettre en main propre.

Return Receipt (340)

Fee: $2.35

Available for registered mail and insured Priority Mail International parcels only.

Macao

Country Conditions for Mailing

Prohibitions (130)
Arms, except under permit.
Firing caps and loaded metal cartridges for portable firearms.
Perishable infectious biological substances.
Radioactive materials.

Restrictions
Coins; banknotes; currency notes; traveler's checks; securities payable to bearer; platinum, gold or silver, manufactured or not; precious stones; jewelry; and other valuable articles may only be sent in registered First-Class Mail International shipments.

Observations
Effective December 20, 1999, Macao became a Special Administrative Region of the People's Republic of China. Despite that change in territorial status, mail intended for delivery in Macao should continue to be addressed to Macao directly.

Customs Forms Required (123)
First-Class Mail International items and Priority Mail International Flat Rate Envelopes and Small Flat Rate Priced Boxes:
PS Form 2976 (see 123.61)
Priority Mail International parcels:
PS Form 2976-A inside 2976-E (envelope)

Global Express Guaranteed (210) Price Group 3

Refer to Notice 123, *Price List*, for the applicable retail, commercial base, or commercial plus price.
Weight Limit: 70 lbs.

Insurance (212.5)

Insured Amount not over	Fee	Insured Amount not over	Fee
$100	No Fee	For document reconstruction insurance or non-document insurance coverage above $800, add $1.00 per $100 or fraction thereof, up to a maximum of $2,499 per shipment.	
200	$1.00		
300	2.00		
400	3.00		
500	4.00		
600	5.00		
700	6.00		
800	7.00	$2,499 max.	$24.00

Value Limit (212.1)
The maximum value of a GXG shipment to this country is $2,499 or a lesser amount if limited by content or value.

Size Limits (211.22)
The surface area of the address side of the item to be mailed must be large enough to completely contain the Global Express Guaranteed Air Waybill/Shipping Invoice (shipping label), postage, endorsement, and any applicable markings. The shipping label is approximately 5.5 inches high and 9.5 inches long.
Maximum length: 46 inches
Maximum width: 35 inches
Maximum height: 46 inches
Maximum length and girth combined: 108 inches

General Conditions for Mailing
See Publication 141, *Global Express Guaranteed Service Guide,* for information about areas served in the destination country, allowable contents, packaging and labeling requirements, tracking and tracing, service standards, and other conditions for mailing.

Express Mail International (220) Price Group 6

Refer to Notice 123, *Price List*, for the applicable retail, commercial base, or commercial plus price.
Weight Limit: 70 lbs.

Express Mail International — Flat Rate Envelope and Flat Rate Boxes
The maximum weight for the Express Mail International Flat Rate Envelope and the Express Mail International Flat Rate Boxes is 20 pounds. Refer to Notice 123, *Price List*, for the applicable retail, commercial base, or commercial plus price.

Insurance (222.8)
Available for **Express Mail International merchandise shipments** only

Insured Amount not over	Fee	Insured Amount not over	Fee
$100	No Fee	For insurance coverage above $2,000, add $1.50 for each $500 or fraction thereof, up to a maximum of $5,000 per shipment.	
200	$0.85		
500	2.35		
1,000	3.85		
1,500	5.35		
2,000	6.85	$5,000 max.	$15.85

Articles Admitted	Required Customs Form/Endorsement
Business correspondence, commercial papers, and documents.	No form required. Endorse item clearly next to mailing label as BUSINESS PAPERS.
Samples of merchandise without commercial value.	PS Form 2976, *Customs — CN 22 and Sender's Declaration.*
Merchandise and all articles subject to customs duty.	PS Form 2976-A, *Customs Declaration and Dispatch Note CP 72,* inside a PS Form 2976-E, *Customs Declaration Envelope CP 91.*

Size Limits (221.52)
Maximum length: 36 inches
Maximum length and girth combined: 79 inches

Notes:

1. Addressees must obtain import license from the local Trade and Industry Department in Macao to receive Express Mail shipments valued at more than 1000 patacas.
2. Coins; banknotes; currency notes, including paper money; securities of any kind payable to bearer; traveler's checks; platinum, gold, and silver; precious stones; jewelry; watches; and other valuable articles are prohibited in Express Mail International shipments to Macao.

Reciprocal Service Name: Speedpost

Country Code: MO

Areas Served:

All points in Macao including the islands of Taipa and Coloane.

Priority Mail International (230) Price Group 6

Refer to Notice 123, *Price List*, for the applicable retail, commercial base, or commercial plus price.
Weight Limit: 70 lbs.

Note: *Ordinary Priority Mail International includes indemnity at no cost based on weight. (See 230.)*

Priority Mail International — Flat Rate

Flat Rate Envelopes or Small Flat Rate Priced Boxes: The maximum weight is 4 pounds. Refer to Notice 123, *Price List*, for the applicable retail, commercial base, or commercial plus price.

Flat Rate Boxes — Medium and Large: The maximum weight is 20 pounds, or the limit set by the individual country, whichever is less. Refer to Notice 123, *Price List*, for the retail, commercial base, or commercial plus price.

Insurance (232.92)

Available for **Priority Mail International merchandise parcels** only (see 323.72 for markings)

Insured Amount not over	Fee	Insured Amount not over	Fee
$50	$2.45		
100	3.60	Add $1.15 for each additional $100 or fraction of insurance coverage.	
200	4.75		
300	5.90		
400	7.05		
500	8.20	$4,227 max.	$51.90

Size Limits (231.22)

Maximum length: 60 inches
Maximum length and girth combined: 108 inches

First-Class Mail International (240) Price Group 6

For the prices and maximum weights for letters, large envelopes (flats), packages (small packets), and postcards, see Notice 123, *Price List*.

Size Limits

Letters: See 241.212
Postcards: See 241.221
Large Envelopes (Flats): See 241.232
Packages (Small Packets): See 241.242 and 241.243

Airmail M-bags (260) — Direct Sack to One Addressee Price Group 6

Refer to Notice 123, *Price List*, for the applicable retail, commercial base, or commercial plus price.
Weight Limit: 66 lbs.

Matter for the Blind (270)

Free when sent as First-Class Mail International, including Priority Mail International Flat Rate Envelopes and Small Flat Rate Priced Boxes. Weight limit: 4 pounds.
Free when sent as Priority Mail International. Weight limit: 15 pounds.

Extra Services

Certificate of Mailing (313)

Individual Pieces	Fee
Individual article (PS Form 3817)	$1.15
Firm mailing books (PS Form 3877), per article listed (minimum 3)	0.44
Duplicate copy of PS Form 3817 or PS Form 3877 (per page)	1.15
Bulk Quantities	**Fee**
First 1,000 pieces (or fraction thereof)	$6.70
Each additional 1,000 pieces (or fraction thereof)	0.80
Duplicate copy of PS Form 3606	1.15

COD and Certified **NOT** for International Mail

International Business Reply Service (382)

Fee: Envelopes up to 2 ounces $1.50; Cards $1.00

International Postal Money Order (371)

NOT Available

International Reply Coupons (381) **Fee:** $2.20

Registered Mail (330) **Fee:** $11.75

Maximum Indemnity: $47.33
Available for First-Class Mail International, including postcards and Flat Rate Envelopes and Small Flat Rate Priced Boxes, and matter for the blind or other physically handicapped persons. Not applicable to M-bags.

Restricted Delivery (350) **Fee:** $4.55

Available for registered mail with a return receipt.
Endorsements: A remettre en main propre.

Return Receipt (340) **Fee:** $2.35

Available for registered mail and insured Priority Mail International parcels only.

Macedonia, Republic of

Country Conditions for Mailing

Prohibitions (130)
No list furnished.

Restrictions
No list furnished.

Observations
No list furnished.

Customs Forms Required (123)
First-Class Mail International items and Priority Mail International Flat Rate Envelopes and Small Flat Rate Priced Boxes:
PS Form 2976 (see 123.61)
Priority Mail International parcels:
PS Form 2976-A inside 2976-E (envelope)

Global Express Guaranteed (210) Price Group 4

Refer to Notice 123, *Price List*, for the applicable retail, commercial base, or commercial plus price.
Weight Limit: 70 lbs.

Insurance (212.5)

Insured Amount not over	Fee	Insured Amount not over	Fee
$100	No Fee	For document reconstruction insurance or non-document insurance coverage above $800, add $1.00 per $100 or fraction thereof, up to a maximum of $2,499 per shipment.	
200	$1.00		
300	2.00		
400	3.00		
500	4.00		
600	5.00		
700	6.00		
800	7.00	$2,499 max.	$24.00

Value Limit (212.1)
The maximum value of a GXG shipment to this country is $2,499 or a lesser amount if limited by content or value.

Size Limits (211.22)
The surface area of the address side of the item to be mailed must be large enough to completely contain the Global Express Guaranteed Air Waybill/Shipping Invoice (shipping label), postage, endorsement, and any applicable markings. The shipping label is approximately 5.5 inches high and 9.5 inches long.
Maximum length: 46 inches
Maximum width: 35 inches
Maximum height: 46 inches
Maximum length and girth combined: 108 inches

General Conditions for Mailing
See Publication 141, *Global Express Guaranteed Service Guide,* for information about areas served in the destination country, allowable contents, packaging and labeling requirements, tracking and tracing, service standards, and other conditions for mailing.

Express Mail International (220) Price Group 4

Refer to Notice 123, *Price List*, for the applicable retail, commercial base, or commercial plus price.
Weight Limit: 66 lbs.

Express Mail International — Flat Rate Envelope and Flat Rate Boxes
The maximum weight for the Express Mail International Flat Rate Envelope and the Express Mail International Flat Rate Boxes is 20 pounds. Refer to Notice 123, *Price List*, for the applicable retail, commercial base, or commercial plus price.

Insurance (222.8)
Available for **Express Mail International merchandise shipments** only

Insured Amount not over	Fee	Insured Amount not over	Fee
$100	No Fee	For insurance coverage above $2,000, add $1.50 for each $500 or fraction thereof, up to a maximum of $5,000 per shipment.	
200	$0.85		
500	2.35		
1,000	3.85		
1,500	5.35		
2,000	6.85	$5,000 max.	$15.85

Articles Admitted	Required Customs Form/Endorsement
Correspondence, business papers, computer data, and advertising material.	PS Form 2976, *Customs — CN 22 and Sender's Declaration.* Endorse item clearly next to mailing label as BUSINESS PAPERS.
Merchandise samples without commercial value.	PS Form 2976, *Customs — CN 22 and Sender's Declaration.*
Merchandise and all articles subject to customs duty.	PS Form 2976-A, *Customs Declaration and Dispatch Note CP 72,* inside a PS Form 2976-E, *Customs Declaration Envelope CP 91.* A commercial invoice must be enclosed in each item.

Size Limits (221.52)
Maximum length: 36 inches
Maximum length and girth combined: 79 inches

Note:
Coins; banknotes; currency notes, including paper money; securities of any kind payable to bearer; traveler's checks; platinum, gold, and silver; precious stones; jewelry; watches; and other valuable articles are prohibited in Express Mail International shipments to Macedonia.

Reciprocal Service Name: Courrier EMS

Country Code: MK

Areas Served: All

Priority Mail International (230) Price Group 4

Refer to Notice 123, *Price List*, for the applicable retail, commercial base, or commercial plus price.
Weight Limit: 70 lbs.

Note: *Ordinary Priority Mail International includes indemnity at no cost based on weight. (See 230.)*

Priority Mail International — Flat Rate

Flat Rate Envelopes or Small Flat Rate Priced Boxes: The maximum weight is 4 pounds. Refer to Notice 123, *Price List*, for the applicable retail, commercial base, or commercial plus price.

Flat Rate Boxes — Medium and Large: The maximum weight is 20 pounds, or the limit set by the individual country, whichever is less. Refer to Notice 123, *Price List*, for the retail, commercial base, or commercial plus price.

Insurance (232.92)

Available for **Priority Mail International merchandise parcels** only (see 323.72 for markings)

Insured Amount not over	Fee	Insured Amount not over	Fee
$50	$2.45		
100	3.60	Add $1.15 for each additional $100 or fraction of insurance coverage.	
200	4.75		
300	5.90		
400	7.05		
500	8.20	$2,380 max.	$30.05

Size Limits (231.22)

Maximum length: 42 inches
Maximum length and girth combined: 79 inches

First-Class Mail International (240) Price Group 4

For the prices and maximum weights for letters, large envelopes (flats), packages (small packets), and postcards, see Notice 123, *Price List*.

Size Limits

Letters: See 241.212
Postcards: See 241.221
Large Envelopes (Flats): See 241.232
Packages (Small Packets): See 241.242 and 241.243

Airmail M-bags (260) — Direct Sack to One Addressee Price Group 4

Refer to Notice 123, *Price List*, for the applicable retail, commercial base, or commercial plus price.
Weight Limit: 66 lbs.

Matter for the Blind (270)

Free when sent as First-Class Mail International, including Priority Mail International Flat Rate Envelopes and Small Flat Rate Priced Boxes. Weight limit: 4 pounds.
Free when sent as Priority Mail International. Weight limit: 15 pounds.

Extra Services

Certificate of Mailing (313)

Individual Pieces	Fee
Individual article (PS Form 3817)	$1.15
Firm mailing books (PS Form 3877), per article listed (minimum 3)	0.44
Duplicate copy of PS Form 3817 or PS Form 3877 (per page)	1.15
Bulk Quantities	**Fee**
First 1,000 pieces (or fraction thereof)	$6.70
Each additional 1,000 pieces (or fraction thereof)	0.80
Duplicate copy of PS Form 3606	1.15

COD and Certified **NOT** for International Mail

International Business Reply Service (382)

Fee: Envelopes up to 2 ounces $1.50; Cards $1.00

International Postal Money Order (371)

NOT Available

International Reply Coupons (381) **Fee:** $2.20

Registered Mail (330) **Fee:** $11.75

Maximum Indemnity: $47.33
Available for First-Class Mail International, including postcards and Flat Rate Envelopes and Small Flat Rate Priced Boxes, and matter for the blind or other physically handicapped persons. Not applicable to M-bags.

Restricted Delivery (350) NOT Available

Return Receipt (340) **Fee:** $2.35

Available for registered mail and insured Priority Mail International parcels only.

Madagascar

Country Conditions for Mailing

Prohibitions (130)

Articles violating the copyright laws.
Boxes of preserved sardines weighing more than 1 kilogram.
Coins; banknotes; currency notes (paper money); securities payable to bearer; traveler's checks; platinum, gold or silver, manufactured or not; precious stones; jewelry; and other valuable articles.
Compound medicines not appearing in an official pharmacopoeia.
Playing cards.
Preserved fish, vegetables, and plums not bearing on each receptacle a stamp showing their origin.
Products bearing false indications of origin.
Radioactive materials.
Saccharine.
Tobacco sauce (Praiss).

Restrictions

Arms and ammunitions for military or sporting use are admitted only under permit issued by local authorities in Madagascar.
Consignments of watches are admitted only in Priority Mail International parcels, the packing of which consist of strong metal boxes or cases made of wood.

Observations

None

Customs Forms Required (123)

First-Class Mail International items and Priority Mail International Flat Rate Envelopes and Small Flat Rate Priced Boxes:
PS Form 2976 (see 123.61)
Priority Mail International parcels:
PS Form 2976-A inside 2976-E (envelope)

Global Express Guaranteed (210) Price Group 4

Refer to Notice 123, *Price List*, for the applicable retail, commercial base, or commercial plus price.
Weight Limit: 70 lbs.

Insurance (212.5)

Insured Amount not over	Fee	Insured Amount not over	Fee
$100	No Fee	For document reconstruction insurance or non-document insurance coverage above $800, add $1.00 per $100 or fraction thereof, up to a maximum of $2,499 per shipment.	
200	$1.00		
300	2.00		
400	3.00		
500	4.00		
600	5.00		
700	6.00		
800	7.00	$2,499 max.	$24.00

Value Limit (212.1)

The maximum value of a GXG shipment to this country is $2,499 or a lesser amount if limited by content or value.

Size Limits (211.22)

The surface area of the address side of the item to be mailed must be large enough to completely contain the Global Express Guaranteed Air Waybill/Shipping Invoice (shipping label), postage, endorsement, and any applicable markings. The shipping label is approximately 5.5 inches high and 9.5 inches long.
Maximum length: 46 inches
Maximum width: 35 inches
Maximum height: 46 inches
Maximum length and girth combined: 108 inches

General Conditions for Mailing

See Publication 141, *Global Express Guaranteed Service Guide,* for information about areas served in the destination country, allowable contents, packaging and labeling requirements, tracking and tracing, service standards, and other conditions for mailing.

Express Mail International (220) Price Group 7

Refer to Notice 123, *Price List*, for the applicable retail, commercial base, or commercial plus price.
Weight Limit: 66 lbs.

Express Mail International — Flat Rate Envelope and Flat Rate Boxes

The maximum weight for the Express Mail International Flat Rate Envelope and the Express Mail International Flat Rate Boxes is 20 pounds. Refer to Notice 123, *Price List*, for the applicable retail, commercial base, or commercial plus price.

Insurance (222.8)

Available for **Express Mail International merchandise shipments** only

Insured Amount not over	Fee	Insured Amount not over	Fee
$100	No Fee	For insurance coverage above $2,000, add $1.50 for each $500 or fraction thereof, up to a maximum of $5,000 per shipment.	
200	$0.85		
500	2.35		
1,000	3.85		
1,500	5.35		
2,000	6.85	$5,000 max.	$15.85

Articles Admitted	Required Customs Form/Endorsement
Correspondence and business papers.	PS Form 2976, *Customs — CN 22 and Sender's Declaration.*
Merchandise samples without commercial value.	PS Form 2976, *Customs — CN 22 and Sender's Declaration.*
Merchandise and all articles subject to customs duty.	PS Form 2976-A, *Customs Declaration and Dispatch Note CP 72,* inside a PS Form 2976-E, *Customs Declaration Envelope CP 91.*

Size Limits (221.52)

Maximum length: 36 inches
Maximum length and girth combined: 79 inches

Note:
Coins; banknotes; currency notes, including paper money; securities of any kind payable to bearer; traveler's checks; platinum, gold, and silver; precious stones; jewelry; watches; and other valuable articles are prohibited in Express Mail International shipments to Madagascar.

Reciprocal Service Name: Malaika

Country Code: MG

Areas Served:
Express Mail International is available ***only*** to the following locations:
Antananarivo
Diego-Suarez
Ivato-Aeroport
Majunga
Tamatave

Priority Mail International (230) Price Group 7

Refer to Notice 123, *Price List*, for the applicable retail, commercial base, or commercial plus price.
Weight Limit: 44 lbs.

Note: *Ordinary Priority Mail International includes indemnity at no cost based on weight. (See 230.)*

Priority Mail International — Flat Rate
Flat Rate Envelopes or Small Flat Rate Priced Boxes: The maximum weight is 4 pounds. Refer to Notice 123, *Price List*, for the applicable retail, commercial base, or commercial plus price.

Flat Rate Boxes — Medium and Large: The maximum weight is 20 pounds, or the limit set by the individual country, whichever is less. Refer to Notice 123, *Price List*, for the retail, commercial base, or commercial plus price.

Insurance (232.92)
Available for **Priority Mail International merchandise parcels** only (see 323.72 for markings)

Insured Amount not over	Fee
$50	$2.45
100	3.60
199 max.	4.75

Size Limits (231.22)
Maximum length: 42 inches
Maximum length and girth combined: 79 inches

First-Class Mail International (240) Price Group 7
For the prices and maximum weights for letters, large envelopes (flats), packages (small packets), and postcards, see Notice 123, *Price List*.

Size Limits
Letters: See 241.212
Postcards: See 241.221
Large Envelopes (Flats): See 241.232
Packages (Small Packets): See 241.242 and 241.243

Airmail M-bags (260) — Direct Sack to One Addressee Price Group 7

Refer to Notice 123, *Price List*, for the applicable retail, commercial base, or commercial plus price.
Weight Limit: 66 lbs.

Matter for the Blind (270)
Free when sent as First-Class Mail International, including Priority Mail International Flat Rate Envelopes and Small Flat Rate Priced Boxes. Weight limit: 4 pounds.
Free when sent as Priority Mail International. Weight limit: 15 pounds.

Extra Services

Certificate of Mailing (313)

Individual Pieces	Fee
Individual article (PS Form 3817)	$1.15
Firm mailing books (PS Form 3877), per article listed (minimum 3)	0.44
Duplicate copy of PS Form 3817 or PS Form 3877 (per page)	1.15
Bulk Quantities	**Fee**
First 1,000 pieces (or fraction thereof)	$6.70
Each additional 1,000 pieces (or fraction thereof)	0.80
Duplicate copy of PS Form 3606	1.15

COD and Certified **NOT** for International Mail

International Business Reply Service (382)
Fee: Envelopes up to 2 ounces $1.50; Cards $1.00

International Postal Money Order (371)
NOT Available

International Reply Coupons (381) **Fee:** $2.20

Registered Mail (330) **Fee:** $11.75
Maximum Indemnity: $47.33
Available for First-Class Mail International, including postcards and Flat Rate Envelopes and Small Flat Rate Priced Boxes, and matter for the blind or other physically handicapped persons. Not applicable to M-bags.

Restricted Delivery (350) **Fee:** $4.55
Available for registered mail with a return receipt.
Endorsements: A remettre en main propre.

Return Receipt (340) **Fee:** $2.35
Available for registered mail and insured Priority Mail International parcels only.

Malawi

Country Conditions for Mailing

Prohibitions (130)

Aphrodisiacs.
Arms, munitions, and similar articles.
Coins; bank notes; currency notes (paper money); securities of any kind payable to bearer; traveler's checks; platinum, gold, and silver (manufactured or not); precious stones; jewelry; and other valuable articles are prohibited in all classes of mail, including Express Mail International shipments, that are sent to Malawi.
Correspondence concerning fraudulent enterprises or fortune telling.
Used clothing.

Restrictions

Patent medicines must be plainly marked with the composition and dosage.

Observations

None

Customs Forms Required (123)

First-Class Mail International items and Priority Mail International Flat Rate Envelopes and Small Flat Rate Priced Boxes:
PS Form 2976 (see 123.61)
Priority Mail International parcels:
PS Form 2976-A inside 2976-E (envelope)

Global Express Guaranteed (210) Price Group 4

Refer to Notice 123, *Price List*, for the applicable retail, commercial base, or commercial plus price.
Weight Limit: 70 lbs.

Insurance (212.5)

Insured Amount not over	Fee	Insured Amount not over	Fee
$100	No Fee	For document reconstruction insurance or non-document insurance coverage above $800, add $1.00 per $100 or fraction thereof, up to a maximum of $2,499 per shipment.	
200	$1.00		
300	2.00		
400	3.00		
500	4.00		
600	5.00		
700	6.00		
800	7.00	$2,499 max.	$24.00

Value Limit (212.1)

The maximum value of a GXG shipment to this country is $2,499 or a lesser amount if limited by content or value.

Size Limits (211.22)

The surface area of the address side of the item to be mailed must be large enough to completely contain the Global Express Guaranteed Air Waybill/Shipping Invoice (shipping label), postage, endorsement, and any applicable markings. The shipping label is approximately 5.5 inches high and 9.5 inches long.
Maximum length: 46 inches
Maximum width: 35 inches
Maximum height: 46 inches
Maximum length and girth combined: 108 inches

General Conditions for Mailing

See Publication 141, *Global Express Guaranteed Service Guide,* for information about areas served in the destination country, allowable contents, packaging and labeling requirements, tracking and tracing, service standards, and other conditions for mailing.

Express Mail International (220) Price Group 7

Refer to Notice 123, *Price List*, for the applicable retail, commercial base, or commercial plus price.
Weight Limit: 44 lbs.

Express Mail International — Flat Rate Envelope and Flat Rate Boxes

The maximum weight for the Express Mail International Flat Rate Envelope and the Express Mail International Flat Rate Boxes is 20 pounds. Refer to Notice 123, *Price List*, for the applicable retail, commercial base, or commercial plus price.

Insurance (222.8)

Note: Express Mail International merchandise insurance is not available to this country. Document reconstruction insurance coverage is provided, at no additional cost, to a maximum of $100 per shipment. See 222.72.

Articles Admitted	Required Customs Form/Endorsement
Correspondence, business papers, and documents.	PS Form 2976, *Customs — CN 22 and Sender's Declaration.* Endorse item clearly next to mailing label as BUSINESS PAPERS.
Merchandise samples without commercial value.	PS Form 2976, *Customs — CN 22 and Sender's Declaration.*

Size Limits (221.52)

Maximum length: 36 inches
Maximum length and girth combined: 79 inches

Notes:

1. Merchandise and all articles subject to customs duty are prohibited in Express Mail International shipments.
2. Coins; banknotes; currency notes, including paper money; securities of any kind payable to bearer; traveler's checks; platinum, gold, and silver; precious stones; jewelry; watches; and other valuable articles are prohibited in Express Mail International shipments to Malawi.

Reciprocal Service Name: Express Mail Service (EMS) (**Note:** Service is available to Malawi but not from it.)

Country Code: MW

Areas Served:

Express Mail International is available ***only*** to the following locations:

Balaka	Liwonde
Blantyre	Luchenze
Capital City	Mangochi
Chichiri	Mulanje
Kanengo	Mzuzu
Karonga	Thyolo
Lilongwe	Zomba
Limbe	

Priority Mail International (230) **Price Group 7**

Refer to Notice 123, *Price List*, for the applicable retail, commercial base, or commercial plus price.
Weight Limit: 66 lbs.

Note: *Ordinary Priority Mail International includes indemnity at no cost based on weight. (See 230.)*

Priority Mail International — Flat Rate

Flat Rate Envelopes or Small Flat Rate Priced Boxes: The maximum weight is 4 pounds. Refer to Notice 123, *Price List*, for the applicable retail, commercial base, or commercial plus price.

Flat Rate Boxes — Medium and Large: The maximum weight is 20 pounds, or the limit set by the individual country, whichever is less. Refer to Notice 123, *Price List*, for the retail, commercial base, or commercial plus price.

Insurance (232.92) NOT Available

Size Limits (231.22)

Maximum length: 42 inches
Maximum length and girth combined: 79 inches

First-Class Mail International (240) **Price Group 7**

For the prices and maximum weights for letters, large envelopes (flats), packages (small packets), and postcards, see Notice 123, *Price List*.

Size Limits

Letters: See 241.212
Postcards: See 241.221
Large Envelopes (Flats): See 241.232
Packages (Small Packets): See 241.242 and 241.243

Airmail M-bags (260) — Direct Sack to One Addressee **Price Group 7**

Refer to Notice 123, *Price List*, for the applicable retail, commercial base, or commercial plus price.
Weight Limit: 66 lbs.

Matter for the Blind (270)

Free when sent as First-Class Mail International, including Priority Mail International Flat Rate Envelopes and Small Flat Rate Priced Boxes. Weight limit: 4 pounds.
Free when sent as Priority Mail International. Weight limit: 15 pounds.

Extra Services

Certificate of Mailing (313)

Individual Pieces	**Fee**
Individual article (PS Form 3817)	$1.15
Firm mailing books (PS Form 3877), per article listed (minimum 3)	0.44
Duplicate copy of PS Form 3817 or PS Form 3877 (per page)	1.15
Bulk Quantities	**Fee**
First 1,000 pieces (or fraction thereof)	$6.70
Each additional 1,000 pieces (or fraction thereof)	0.80
Duplicate copy of PS Form 3606	1.15

COD and Certified **NOT** for International Mail

International Business Reply Service (382)

Fee: Envelopes up to 2 ounces $1.50; Cards $1.00

International Postal Money Order (371)

NOT Available

International Reply Coupons (381) **Fee:** $2.20

Registered Mail (330) **Fee:** $11.75

Maximum Indemnity: $47.33
Available for First-Class Mail International, including postcards and Flat Rate Envelopes and Small Flat Rate Priced Boxes, and matter for the blind or other physically handicapped persons. Not applicable to M-bags.

Restricted Delivery (350) **Fee:** $4.55

Available for registered mail with a return receipt.
Endorsements: A remettre en main propre.

Return Receipt (340) **Fee:** $2.35

Available for registered mail only.

Malaysia

Country Conditions for Mailing

Prohibitions (130)

Butane gas lighters and refills.
Circulars or advertisements containing amulets, charms or talismans.
Coins or ingots of a value higher than 50 Malaysian dollars, except coins for ornament.
Firearms, including gas guns, and any component parts of such weapons.
Harpoons and spear guns used for undersea fishing.
Lottery tickets and advertisements thereof.
Pornographic articles.
Radioactive materials.

Restrictions

Coins; banknotes; currency notes (paper money); securities of any kind payable to bearer; traveler's checks; platinum, gold or silver, manufactured or not; precious stones; jewelry; and other valuable articles may only be sent in insured parcels. These articles are not admitted in First-Class Mail International shipments, including the Priority Mail International Flat Rate Envelope.

Observations

1. Insured parcels for Sabah (North Borneo and Labuan) and Sarawak are accepted only for delivery at the following offices:
   Sabah (North Borneo and Labuan): Beaufort, Keningau, Kota Belud, Kota Kinabalu, Kudat, Labuan, Lahad Datu, Papar, Ranau, Sandakan, Semporna, Tawau, Tenom, and Tuoran.
   Sarawak: Baran, Bintulu, Kuching, Limbang, Miri, Mukah, Sarikei, Sibu, and Simanggang.
2. Many types of merchandise require import licenses that addressees must obtain from the Malaysian authorities. Senders should be assured before mailing that addressees can obtain licenses if needed.

Customs Forms Required (123)

First-Class Mail International items and Priority Mail International Flat Rate Envelopes and Small Flat Rate Priced Boxes:
PS Form 2976 (see 123.61)
Priority Mail International parcels:
PS Form 2976-A inside 2976-E (envelope)

Global Express Guaranteed (210) Price Group 6

Refer to Notice 123, *Price List*, for the applicable retail, commercial base, or commercial plus price.
Weight Limit: 70 lbs.

Insurance (212.5)

Insured Amount not over	Fee	Insured Amount not over	Fee
$100	No Fee	For document reconstruction insurance or non-document insurance coverage above $800, add $1.00 per $100 or fraction thereof, up to a maximum of $2,499 per shipment.	
200	$1.00		
300	2.00		
400	3.00		
500	4.00		
600	5.00		
700	6.00		
800	7.00	$2,499 max.	$24.00

Value Limit (212.1)

The maximum value of a GXG shipment to this country is $2,499 or a lesser amount if limited by content or value.

Size Limits (211.22)

The surface area of the address side of the item to be mailed must be large enough to completely contain the Global Express Guaranteed Air Waybill/Shipping Invoice (shipping label), postage, endorsement, and any applicable markings. The shipping label is approximately 5.5 inches high and 9.5 inches long.
Maximum length: 46 inches
Maximum width: 35 inches
Maximum height: 46 inches
Maximum length and girth combined: 108 inches

General Conditions for Mailing

See Publication 141, *Global Express Guaranteed Service Guide,* for information about areas served in the destination country, allowable contents, packaging and labeling requirements, tracking and tracing, service standards, and other conditions for mailing.

Express Mail International (220) Price Group 6

Refer to Notice 123, *Price List*, for the applicable retail, commercial base, or commercial plus price.
Weight Limit: 66 lbs.

Express Mail International — Flat Rate Envelope and Flat Rate Boxes

The maximum weight for the Express Mail International Flat Rate Envelope and the Express Mail International Flat Rate Boxes is 20 pounds. Refer to Notice 123, *Price List*, for the applicable retail, commercial base, or commercial plus price.

Insurance (222.8)

Available for **Express Mail International merchandise shipments** only

Insured Amount not over	Fee	Insured Amount not over	Fee
$100	No Fee	For insurance coverage above $2,000, add $1.50 for each $500 or fraction thereof, up to a maximum of $5,000 per shipment.	
200	$0.85		
500	2.35		
1,000	3.85		
1,500	5.35		
2,000	6.85	$5,000 max.	$15.85

Articles Admitted	Required Customs Form/Endorsement
Business correspondence, commercial papers, and documents.	No forms required. Endorse item clearly next to mailing label as BUSINESS PAPERS.
Merchandise samples without commercial value.	PS Form 2976, *Customs — CN 22 and Sender's Declaration.*
Merchandise and all articles subject to customs duty.	PS Form 2976-A, *Customs Declaration and Dispatch Note CP 72,* inside a PS Form 2976-E, *Customs Declaration Envelope CP 91.* A commercial invoice must be placed on the Express Mail International item.

Size Limits (221.52)

Maximum length: 36 inches
Maximum length and girth combined: 79 inches

Note:
Coins; banknotes; currency notes, including paper money; securities of any kind payable to bearer; traveler's checks; platinum, gold, and silver; precious stones; jewelry; watches; and other valuable articles are prohibited in Express Mail International shipments to Malaysia.

Reciprocal Service Name: Poslaju

Country Code: MY

Areas Served: All

Priority Mail International (230) Price Group 6

Refer to Notice 123, *Price List*, for the applicable retail, commercial base, or commercial plus price.
Weight Limit: 66 lbs.

Note: *Ordinary Priority Mail International includes indemnity at no cost based on weight. (See 230.)*

Priority Mail International — Flat Rate
Flat Rate Envelopes or Small Flat Rate Priced Boxes: The maximum weight is 4 pounds. Refer to Notice 123, *Price List*, for the applicable retail, commercial base, or commercial plus price.

Flat Rate Boxes — Medium and Large: The maximum weight is 20 pounds, or the limit set by the individual country, whichever is less. Refer to Notice 123, *Price List*, for the retail, commercial base, or commercial plus price.

Insurance (232.92)
Available for **Priority Mail International merchandise parcels** only (see 323.72 for markings)

Insured Amount not over	Fee	Insured Amount not over	Fee
$50	$2.45		
100	3.60	Add $1.15 for each additional $100 or fraction of insurance coverage.	
200	4.75		
300	5.90		
400	7.05		
500	8.20	$1,429 max.	$19.70

Size Limits (231.22)
Maximum length: 42 inches
Maximum length and girth combined: 79 inches

First-Class Mail International (240) Price Group 6
For the prices and maximum weights for letters, large envelopes (flats), packages (small packets), and postcards, see Notice 123, *Price List*.

Size Limits
Letters: See 241.212
Postcards: See 241.221
Large Envelopes (Flats): See 241.232
Packages (Small Packets): See 241.242 and 241.243

Airmail M-bags (260) — Direct Sack to One Addressee Price Group 6

Refer to Notice 123, *Price List*, for the applicable retail, commercial base, or commercial plus price.
Weight Limit: 66 lbs.

Matter for the Blind (270)
Free when sent as First-Class Mail International, including Priority Mail International Flat Rate Envelopes and Small Flat Rate Priced Boxes. Weight limit: 4 pounds.
Free when sent as Priority Mail International. Weight limit: 15 pounds.

Extra Services

Certificate of Mailing (313)

Individual Pieces	Fee
Individual article (PS Form 3817)	$1.15
Firm mailing books (PS Form 3877), per article listed (minimum 3)	0.44
Duplicate copy of PS Form 3817 or PS Form 3877 (per page)	1.15
Bulk Quantities	**Fee**
First 1,000 pieces (or fraction thereof)	$6.70
Each additional 1,000 pieces (or fraction thereof)	0.80
Duplicate copy of PS Form 3606	1.15

COD and Certified **NOT** for International Mail

International Business Reply Service (382)
Fee: Envelopes up to 2 ounces $1.50; Cards $1.00

International Postal Money Order (371)
NOT Available

International Reply Coupons (381) **Fee:** $2.20

Registered Mail (330) **Fee:** $11.75
Maximum Indemnity: $47.33
Available for First-Class Mail International, including postcards and Flat Rate Envelopes and Small Flat Rate Priced Boxes, and matter for the blind or other physically handicapped persons. Not applicable to M-bags.

Restricted Delivery (350) **Fee:** $4.55
Available for registered mail with a return receipt.
Endorsements: A remettre en main propre.

Return Receipt (340) **Fee:** $2.35
Available for registered mail and insured Priority Mail International parcels only.

Maldives

Country Conditions for Mailing

Prohibitions (130)
Any type of gunpowder; weapons of war; intoxicants; poisons; nitrates; pork; statues used for worship; pornographic material.
Perishable infectious biological substances.
Perishable noninfectious biological substances.
Radioactive materials.

Restrictions
No list furnished.

Observations
None

Customs Forms Required (123)
First-Class Mail International items and Priority Mail International Flat Rate Envelopes and Small Flat Rate Priced Boxes:
PS Form 2976 (see 123.61)
Priority Mail International parcels:
PS Form 2976-A inside 2976-E (envelope)

Global Express Guaranteed (210) Price Group 6

Refer to Notice 123, *Price List*, for the applicable retail, commercial base, or commercial plus price.
Weight Limit: 70 lbs.

Insurance (212.5)

Insured Amount not over	Fee	Insured Amount not over	Fee
$100	No Fee	For document reconstruction insurance or non-document insurance coverage above $800, add $1.00 per $100 or fraction thereof, up to a maximum of $2,499 per shipment.	
200	$1.00		
300	2.00		
400	3.00		
500	4.00		
600	5.00		
700	6.00		
800	7.00	$2,499 max.	$24.00

Value Limit (212.1)
The maximum value of a GXG shipment to this country is $2,499 or a lesser amount if limited by content or value.

Size Limits (211.22)
The surface area of the address side of the item to be mailed must be large enough to completely contain the Global Express Guaranteed Air Waybill/Shipping Invoice (shipping label), postage, endorsement, and any applicable markings. The shipping label is approximately 5.5 inches high and 9.5 inches long.
Maximum length: 46 inches
Maximum width: 35 inches
Maximum height: 46 inches
Maximum length and girth combined: 108 inches

General Conditions for Mailing
See Publication 141, *Global Express Guaranteed Service Guide,* for information about areas served in the destination country, allowable contents, packaging and labeling requirements, tracking and tracing, service standards, and other conditions for mailing.

Express Mail International (220) Price Group 6

Refer to Notice 123, *Price List*, for the applicable retail, commercial base, or commercial plus price.
Weight Limit: 66 lbs.

Express Mail International — Flat Rate Envelope and Flat Rate Boxes
The maximum weight for the Express Mail International Flat Rate Envelope and the Express Mail International Flat Rate Boxes is 20 pounds. Refer to Notice 123, *Price List*, for the applicable retail, commercial base, or commercial plus price.

Insurance (222.8)
Available for **Express Mail International merchandise shipments** only

Insured Amount not over	Fee	Insured Amount not over	Fee
$100	No Fee	For insurance coverage above $2,000, add $1.50 for each $500 or fraction thereof, up to a maximum of $5,000 per shipment.	
200	$0.85		
500	2.35		
1,000	3.85		
1,500	5.35		
2,000	6.85	$5,000 max.	$15.85

Articles Admitted	Required Customs Form/Endorsement
Correspondence and business papers.	PS Form 2976, *Customs — CN 22 and Sender's Declaration.* Endorse item clearly next to mailing label as BUSINESS PAPERS.
Merchandise samples without commercial value and not subject to customs duty.	PS Form 2976, *Customs — CN 22 and Sender's Declaration.*
Merchandise and all articles subject to customs duty.	PS Form 2976-A, *Customs Declaration and Dispatch Note CP 72,* inside a PS Form 2976-E, *Customs Declaration Envelope CP 91.*

Size Limits (221.52)
Maximum length: 36 inches
Maximum length and girth combined: 79 inches

Note:
Coins; banknotes; currency notes, including paper money; securities of any kind payable to bearer; traveler's checks; platinum, gold, and silver; precious stones; jewelry; watches; and other valuable articles are prohibited in Express Mail International shipments to Maldives.

Reciprocal Service Name: EMS Swiftpost International

Country Code: MV

Areas Served:
Express Mail International is available ***only*** to the following locations:
Only Male and all resort hotels (postal codes 2001–2006).

Priority Mail International (230) Price Group 6

Refer to Notice 123, *Price List*, for the applicable retail, commercial base, or commercial plus price.
Weight Limit: 66 lbs.

Note: *Ordinary Priority Mail International includes indemnity at no cost based on weight. (See 230.)*

Priority Mail International — Flat Rate

Flat Rate Envelopes or Small Flat Rate Priced Boxes: The maximum weight is 4 pounds. Refer to Notice 123, *Price List*, for the applicable retail, commercial base, or commercial plus price.

Flat Rate Boxes — Medium and Large: The maximum weight is 20 pounds, or the limit set by the individual country, whichever is less. Refer to Notice 123, *Price List*, for the retail, commercial base, or commercial plus price.

Insurance (232.92) NOT Available

Size Limits (231.22)

Maximum length: 42 inches
Maximum length and girth combined: 79 inches

First-Class Mail International (240) Price Group 6

For the prices and maximum weights for letters, large envelopes (flats), packages (small packets), and postcards, see Notice 123, *Price List*.

Size Limits

Letters: See 241.212
Postcards: See 241.221
Large Envelopes (Flats): See 241.232
Packages (Small Packets): See 241.242 and 241.243

Airmail M-bags (260) — Direct Sack to One Addressee Price Group 6

Refer to Notice 123, *Price List*, for the applicable retail, commercial base, or commercial plus price.
Weight Limit: 66 lbs.

Matter for the Blind (270)

Free when sent as First-Class Mail International, including Priority Mail International Flat Rate Envelopes and Small Flat Rate Priced Boxes. Weight limit: 4 pounds.
Free when sent as Priority Mail International. Weight limit: 15 pounds.

Extra Services

Certificate of Mailing (313)

Individual Pieces	Fee
Individual article (PS Form 3817)	$1.15
Firm mailing books (PS Form 3877), per article listed (minimum 3)	0.44
Duplicate copy of PS Form 3817 or PS Form 3877 (per page)	1.15
Bulk Quantities	**Fee**
First 1,000 pieces (or fraction thereof)	$6.70
Each additional 1,000 pieces (or fraction thereof)	0.80
Duplicate copy of PS Form 3606	1.15

COD and Certified **NOT** for International Mail

International Business Reply Service (382)

Fee: Envelopes up to 2 ounces $1.50; Cards $1.00

International Postal Money Order (371)

NOT Available

International Reply Coupons (381) **Fee:** $2.20

Registered Mail (330) **Fee:** $11.75

Maximum Indemnity: $47.33
Available for First-Class Mail International, including postcards and Flat Rate Envelopes and Small Flat Rate Priced Boxes, and matter for the blind or other physically handicapped persons. Not applicable to M-bags.

Restricted Delivery (350) NOT Available

Return Receipt (340) **Fee:** $2.35

Available for registered mail only.

Mali

Country Conditions for Mailing

Prohibitions (130)

Coins; banknotes; currency notes (paper money); traveler's checks; securities payable to bearer; platinum, gold, silver, manufactured or not; precious stones, jewelry and other valuable articles.
Perishable infectious biological substances.
Perishable noninfectious biological substances.
Radioactive materials.
Weights and measures not of the metric system.

Restrictions

Preserved fish, vegetables, and plums must be marked plainly with country of origin. Boxes of fish weighing more than one kilogram.
The following articles are subject to special regulations on importation: Firearms and airguns; distilling apparatus; saccharine and artificial flavors for beverages and confectionery; phonograph records, Arabic books, and prints.

Observations

1. First-Class Mail International items, including the Priority Mail International Flat Rate Envelope, containing dutiable articles must be registered.
2. Postal authorities of Mali collect domestic postage from addressees for inbound shipments.

Customs Forms Required (123)

First-Class Mail International items and Priority Mail International Flat Rate Envelopes and Small Flat Rate Priced Boxes:
PS Form 2976 (see 123.61)
Priority Mail International parcels:
PS Form 2976-A inside 2976-E (envelope)

Global Express Guaranteed (210) Price Group 4

Refer to Notice 123, *Price List*, for the applicable retail, commercial base, or commercial plus price.
Weight Limit: 70 lbs.

Insurance (212.5)

Insured Amount not over	Fee	Insured Amount not over	Fee
$100	No Fee	For document reconstruction insurance or non-document insurance coverage above $800, add $1.00 per $100 or fraction thereof, up to a maximum of $2,499 per shipment.	
200	$1.00		
300	2.00		
400	3.00		
500	4.00		
600	5.00		
700	6.00		
800	7.00	$2,499 max.	$24.00

Value Limit (212.1)

The maximum value of a GXG shipment to this country is $2,499 or a lesser amount if limited by content or value.

Size Limits (211.22)

The surface area of the address side of the item to be mailed must be large enough to completely contain the Global Express Guaranteed Air Waybill/Shipping Invoice (shipping label), postage, endorsement, and any applicable markings. The shipping label is approximately 5.5 inches high and 9.5 inches long.
Maximum length: 46 inches
Maximum width: 35 inches
Maximum height: 46 inches
Maximum length and girth combined: 108 inches

General Conditions for Mailing

See Publication 141, *Global Express Guaranteed Service Guide,* for information about areas served in the destination country, allowable contents, packaging and labeling requirements, tracking and tracing, service standards, and other conditions for mailing.

Express Mail International (220) Price Group 7

Refer to Notice 123, *Price List*, for the applicable retail, commercial base, or commercial plus price.
Weight Limit: 66 lbs.

Express Mail International — Flat Rate Envelope and Flat Rate Boxes

The maximum weight for the Express Mail International Flat Rate Envelope and the Express Mail International Flat Rate Boxes is 20 pounds. Refer to Notice 123, *Price List*, for the applicable retail, commercial base, or commercial plus price.

Insurance (222.8)

Available for **Express Mail International merchandise shipments** only

Insured Amount not over	Fee	Insured Amount not over	Fee
$100	No Fee	For insurance coverage above $2,000, add $1.50 for each $500 or fraction thereof, up to a maximum of $5,000 per shipment.	
200	$0.85		
500	2.35		
1,000	3.85		
1,500	5.35		
2,000	6.85	$5,000 max.	$15.85

Articles Admitted	Required Customs Form/Endorsement
Correspondence, business papers, and computer data.	No form required. Endorse item clearly next to mailing label as BUSINESS PAPERS.
Merchandise samples without commercial value.	PS Form 2976, *Customs — CN 22 and Sender's Declaration.*
Merchandise and all articles subject to customs duty.	PS Form 2976-A, *Customs Declaration and Dispatch Note CP 72,* inside a PS Form 2976-E, *Customs Declaration Envelope CP 91.*

Size Limits (221.52)

Maximum length: 36 inches
Maximum length and girth combined: 79 inches

Note:
Coins; banknotes; currency notes, including paper money; securities of any kind payable to bearer; traveler's checks; platinum, gold, and silver; precious stones; jewelry; watches; and other valuable articles are prohibited in Express Mail International shipments to Mali.

Reciprocal Service Name: EMS-Mali

Country Code: ML

Areas Served:

Bamako
Gao
Kayes
Koulikoro
Mopti
Segou
Sikasso
Tombouctou

Priority Mail International (230) Price Group 7

Refer to Notice 123, *Price List*, for the applicable retail, commercial base, or commercial plus price.
Weight Limit: 66 lbs.

Note: *Ordinary Priority Mail International includes indemnity at no cost based on weight. (See 230.)*

Priority Mail International — Flat Rate
Flat Rate Envelopes or Small Flat Rate Priced Boxes: The maximum weight is 4 pounds. Refer to Notice 123, *Price List*, for the applicable retail, commercial base, or commercial plus price.

Flat Rate Boxes — Medium and Large: The maximum weight is 20 pounds, or the limit set by the individual country, whichever is less. Refer to Notice 123, *Price List*, for the retail, commercial base, or commercial plus price.

Insurance (232.92) NOT Available

Size Limits (231.22)
Maximum length: 42 inches
Maximum length and girth combined: 79 inches

First-Class Mail International (240) Price Group 7
For the prices and maximum weights for letters, large envelopes (flats), packages (small packets), and postcards, see Notice 123, *Price List*.

Size Limits
Letters: See 241.212
Postcards: See 241.221
Large Envelopes (Flats): See 241.232
Packages (Small Packets): See 241.242 and 241.243

Airmail M-bags (260) — Direct Sack to One Addressee Price Group 7

Refer to Notice 123, *Price List*, for the applicable retail, commercial base, or commercial plus price.
Weight Limit: 66 lbs.

Matter for the Blind (270)
Free when sent as First-Class Mail International, including Priority Mail International Flat Rate Envelopes and Small Flat Rate Priced Boxes. Weight limit: 4 pounds.
Free when sent as Priority Mail International. Weight limit: 15 pounds.

Extra Services

Certificate of Mailing (313)

Individual Pieces	Fee
Individual article (PS Form 3817)	$1.15
Firm mailing books (PS Form 3877), per article listed (minimum 3)	0.44
Duplicate copy of PS Form 3817 or PS Form 3877 (per page)	1.15
Bulk Quantities	**Fee**
First 1,000 pieces (or fraction thereof)	$6.70
Each additional 1,000 pieces (or fraction thereof)	0.80
Duplicate copy of PS Form 3606	1.15

COD and Certified **NOT** for International Mail

International Business Reply Service (382)
Fee: Envelopes up to 2 ounces $1.50; Cards $1.00

International Postal Money Order (371)
Use MO Form MP1
Maximum Amount Available: $700 **Fee:** $4.45
Money Order Inquiry: **Fee:** $5.50

International Reply Coupons (381) **Fee:** $2.20

Registered Mail (330) **Fee:** $11.75
Maximum Indemnity: $47.33
Available for First-Class Mail International, including postcards and Flat Rate Envelopes and Small Flat Rate Priced Boxes, and matter for the blind or other physically handicapped persons. Not applicable to M-bags.

Restricted Delivery (350) NOT Available

Return Receipt (340) **Fee:** $2.35
Available for registered mail only.

Malta

Country Conditions for Mailing

Prohibitions (130)

Arms and weapons.
Firing caps and loaded metal cartridges for portable firearms and ammunition.
Human remains.
Indecent or obscene articles.
Live plants and animals.
Lottery tickets and advertisements thereof.
Radioactive materials.
Switchblade knives.

Restrictions

Used clothing, sacks, bags, carpets, embroidery, fruit, vegetables, and many other foodstuffs are subject to local health regulations.

Observations

1. A parcel may be addressed to a street address or to a post office box. A local telephone number for the addressee should be provided when the item is addressed to a street address and must be provided when the item is addressed to a post office box.
2. For parcels, an invoice, in duplicate, is required for all commercial shipments regardless of value and all personal shipments valued at $300 or more. The invoices must be affixed to the outside of the parcel or may be enclosed in PS Form 2976-E with the customs declaration.
3. Many items are completely prohibited or admitted only under special permit issued by the Controller of Customs, Malta. The sender, therefore, should ascertain from the addressee before mailing whether the necessary documents are held.

Customs Forms Required (123)

First-Class Mail International items and Priority Mail International Flat Rate Envelopes and Small Flat Rate Priced Boxes:
PS Form 2976 (see 123.61)
Priority Mail International parcels:
PS Form 2976-A inside 2976-E (envelope)

Global Express Guaranteed (210) Price Group 5

Refer to Notice 123, *Price List*, for the applicable retail, commercial base, or commercial plus price.
Weight Limit: 70 lbs.

Insurance (212.5)

Insured Amount not over	Fee	Insured Amount not over	Fee
$100	No Fee	For document reconstruction insurance or non-document insurance coverage above $800, add $1.00 per $100 or fraction thereof, up to a maximum of $2,499 per shipment.	
200	$1.00		
300	2.00		
400	3.00		
500	4.00		
600	5.00		
700	6.00		
800	7.00	$2,499 max.	$24.00

Value Limit (212.1)

The maximum value of a GXG shipment to this country is $2,499 or a lesser amount if limited by content or value.

Size Limits (211.22)

The surface area of the address side of the item to be mailed must be large enough to completely contain the Global Express Guaranteed Air Waybill/Shipping Invoice (shipping label), postage, endorsement, and any applicable markings. The shipping label is approximately 5.5 inches high and 9.5 inches long.
Maximum length: 46 inches
Maximum width: 35 inches
Maximum height: 46 inches
Maximum length and girth combined: 108 inches

General Conditions for Mailing

See Publication 141, *Global Express Guaranteed Service Guide,* for information about areas served in the destination country, allowable contents, packaging and labeling requirements, tracking and tracing, service standards, and other conditions for mailing.

Express Mail International (220) Price Group 5

Refer to Notice 123, *Price List*, for the applicable retail, commercial base, or commercial plus price.
Weight Limit: 44 lbs.

Express Mail International — Flat Rate Envelope and Flat Rate Boxes

The maximum weight for the Express Mail International Flat Rate Envelope and the Express Mail International Flat Rate Boxes is 20 pounds. Refer to Notice 123, *Price List*, for the applicable retail, commercial base, or commercial plus price.

Insurance (222.8)

Available for **Express Mail International merchandise shipments** only

Insured Amount not over	Fee	Insured Amount not over	Fee
$100	No Fee	For insurance coverage above $2,000, add $1.50 for each $500 or fraction thereof, up to a maximum of $5,000 per shipment.	
200	$0.85		
500	2.35		
1,000	3.85		
1,500	5.35		
2,000	6.85	$5,000 max.	$15.85

Articles Admitted	Required Customs Form/Endorsement
Correspondence and business papers.	PS Form 2976, *Customs — CN 22 and Sender's Declaration.* Endorse item clearly next to mailing label as BUSINESS PAPERS.
Merchandise samples without commercial value and not subject to customs duty.	PS Form 2976, *Customs — CN 22 and Sender's Declaration.*
Merchandise and all articles subject to customs duty.	PS Form 2976-A, *Customs Declaration and Dispatch Note CP 72,* inside a PS Form 2976-E, *Customs Declaration Envelope CP 91.* An invoice, in duplicate, is required for all commercial shipments regardless of value and all personal shipments valued at $300 or more. The invoices must be either affixed to the outside of the parcel or enclosed in PS Form 2976-E with the customs declaration.

Size Limits (221.52)
Maximum length: 60 inches
Maximum length and girth combined: 108 inches

Notes:
1. An invoice, in duplicate, is required for all commercial shipments regardless of value and for all personal shipments valued at $300 or more. The invoices must be either affixed to the outside of the parcel or enclosed in PS Form 2976-E with the customs declaration.
2. Arms, weapons, and human remains are prohibited.
3. Coins; banknotes; currency notes, including paper money; securities of any kind payable to bearer; traveler's checks; platinum, gold, and silver; precious stones; jewelry; watches; and other valuable articles are prohibited in Express Mail International shipments to Malta.
4. An Express Mail International shipment may be addressed to a street address or to a post office box. A local telephone number for the addressee should be provided when the item is addressed to a street address and must be provided when the item is addressed to a post office box.

Reciprocal Service Name: EMS Datapost

Country Code: MT

Areas Served: All

Priority Mail International (230) Price Group 5

Refer to Notice 123, *Price List*, for the applicable retail, commercial base, or commercial plus price.
Weight Limit: 66 lbs.

Note: *Ordinary Priority Mail International includes indemnity at no cost based on weight. (See 230.)*

Priority Mail International — Flat Rate
Flat Rate Envelopes or Small Flat Rate Priced Boxes: The maximum weight is 4 pounds. Refer to Notice 123, *Price List*, for the applicable retail, commercial base, or commercial plus price.

Flat Rate Boxes — Medium and Large: The maximum weight is 20 pounds, or the limit set by the individual country, whichever is less. Refer to Notice 123, *Price List*, for the retail, commercial base, or commercial plus price.

Insurance (232.92) NOT Available

Size Limits (231.22)
Maximum length: 60 inches
Maximum length and girth combined: 108 inches

First-Class Mail International (240) Price Group 5
For the prices and maximum weights for letters, large envelopes (flats), packages (small packets), and postcards, see Notice 123, *Price List*.

Size Limits
Letters: See 241.212
Postcards: See 241.221
Large Envelopes (Flats): See 241.232
Packages (Small Packets): See 241.242 and 241.243

Airmail M-bags (260) — Direct Sack to One Addressee Price Group 5

Refer to Notice 123, *Price List*, for the applicable retail, commercial base, or commercial plus price.
Weight Limit: 66 lbs.

Matter for the Blind (270)
Free when sent as First-Class Mail International, including Priority Mail International Flat Rate Envelopes and Small Flat Rate Priced Boxes. Weight limit: 4 pounds.
Free when sent as Priority Mail International. Weight limit: 15 pounds.

Extra Services

Certificate of Mailing (313)

Individual Pieces	Fee
Individual article (PS Form 3817)	$1.15
Firm mailing books (PS Form 3877), per article listed (minimum 3)	0.44
Duplicate copy of PS Form 3817 or PS Form 3877 (per page)	1.15
Bulk Quantities	**Fee**
First 1,000 pieces (or fraction thereof)	$6.70
Each additional 1,000 pieces (or fraction thereof)	0.80
Duplicate copy of PS Form 3606	1.15

COD and Certified

NOT for International Mail

International Business Reply Service (382)

Fee: Envelopes up to 2 ounces $1.50; Cards $1.00

International Postal Money Order (371)

NOT Available

International Reply Coupons (381)

Fee: $2.20

Registered Mail (330)

Fee: $11.75

Maximum Indemnity: $47.33
Available for First-Class Mail International, including postcards and Flat Rate Envelopes and Small Flat Rate Priced Boxes, and matter for the blind or other physically handicapped persons. Not applicable to M-bags.

Restricted Delivery (350)

NOT Available

Return Receipt (340)

Fee: $2.35

Available for registered mail only.

Martinique

Country Conditions for Mailing

Prohibitions (130)
Perishable infectious biological substances.
Perishable noninfectious biological substances.
Radioactive materials.
Otherwise, same as for France.

Restrictions
Same as for France.

Observations
Same as for France.

Customs Forms Required (123)
First-Class Mail International items and Priority Mail International Flat Rate Envelopes and Small Flat Rate Priced Boxes:
PS Form 2976 (see 123.61)
Priority Mail International parcels:
PS Form 2976-A inside 2976-E (envelope)

Global Express Guaranteed (210) Price Group 7

Refer to Notice 123, *Price List*, for the applicable retail, commercial base, or commercial plus price.
Weight Limit: 70 lbs.

Insurance (212.5)

Insured Amount not over	Fee	Insured Amount not over	Fee
$100	No Fee	For document reconstruction insurance or non-document insurance coverage above $800, add $1.00 per $100 or fraction thereof, up to a maximum of $2,499 per shipment.	
200	$1.00		
300	2.00		
400	3.00		
500	4.00		
600	5.00		
700	6.00		
800	7.00	$2,499 max.	$24.00

Value Limit (212.1)
The maximum value of a GXG shipment to this country is $2,499 or a lesser amount if limited by content or value.

Size Limits (211.22)
The surface area of the address side of the item to be mailed must be large enough to completely contain the Global Express Guaranteed Air Waybill/Shipping Invoice (shipping label), postage, endorsement, and any applicable markings. The shipping label is approximately 5.5 inches high and 9.5 inches long.
Maximum length: 46 inches
Maximum width: 35 inches
Maximum height: 46 inches
Maximum length and girth combined: 108 inches

General Conditions for Mailing
See Publication 141, *Global Express Guaranteed Service Guide,* for information about areas served in the destination country, allowable contents, packaging and labeling requirements, tracking and tracing, service standards, and other conditions for mailing.

Express Mail International (220) Price Group 9

Refer to Notice 123, *Price List*, for the applicable retail, commercial base, or commercial plus price.
Weight Limit: 66 lbs.

Express Mail International — Flat Rate Envelope and Flat Rate Boxes
The maximum weight for the Express Mail International Flat Rate Envelope and the Express Mail International Flat Rate Boxes is 20 pounds. Refer to Notice 123, *Price List*, for the applicable retail, commercial base, or commercial plus price.

Insurance (222.8)
Available for **Express Mail International merchandise shipments** only

Insured Amount not over	Fee	Insured Amount not over	Fee
$100	No Fee	For insurance coverage above $2,000, add $1.50 for each $500 or fraction thereof, up to a maximum of $5,000 per shipment.	
200	$0.85		
500	2.35		
1,000	3.85		
1,500	5.35		
2,000	6.85	$5,000 max.	$15.85

Articles Admitted	Required Customs Form/Endorsement
Correspondence and business papers.	PS Form 2976, *Customs — CN 22 and Sender's Declaration.* Endorse item clearly next to mailing label as BUSINESS PAPERS.
Merchandise samples without commercial value and not subject to customs duty.	PS Form 2976, *Customs — CN 22 and Sender's Declaration.*
Merchandise and all articles subject to customs duty.	PS Form 2976-A, *Customs Declaration and Dispatch Note CP 72,* inside a PS Form 2976-E, *Customs Declaration Envelope CP 91.* Include a commercial invoice in each item.

Size Limits (221.52)
Maximum length: 36 inches
Maximum length and girth combined: 79 inches

Note:
Coins; banknotes; currency notes, including paper money; securities of any kind payable to bearer; traveler's checks; platinum, gold, and silver; precious stones; jewelry; watches; and other valuable articles are prohibited in Express Mail International shipments to Martinique. All items prohibited in regular international mail are also prohibited in Express Mail International to Martinique.

Reciprocal Service Name: Chronopost

Country Code: MQ

Areas Served: All

Priority Mail International (230) Price Group 9

Refer to Notice 123, *Price List*, for the applicable retail, commercial base, or commercial plus price.
Weight Limit: 66 lbs.

Note: *Ordinary Priority Mail International includes indemnity at no cost based on weight. (See 230.)*

Priority Mail International — Flat Rate

Flat Rate Envelopes or Small Flat Rate Priced Boxes: The maximum weight is 4 pounds. Refer to Notice 123, *Price List*, for the applicable retail, commercial base, or commercial plus price.

Flat Rate Boxes — Medium and Large: The maximum weight is 20 pounds, or the limit set by the individual country, whichever is less. Refer to Notice 123, *Price List*, for the retail, commercial base, or commercial plus price.

Insurance (232.92)

Available for **Priority Mail International merchandise parcels** only (see 323.72 for markings)

Insured Amount not over	Fee	Insured Amount not over	Fee
$50	$2.45		
100	3.60	Add $1.15 for each additional $100 or fraction of insurance coverage.	
200	4.75		
300	5.90		
400	7.05		
500	8.20	$5,000 max.	$59.95

Size Limits (231.22)

Maximum length: 42 inches
Maximum length and girth combined: 79 inches

First-Class Mail International (240) Price Group 9

For the prices and maximum weights for letters, large envelopes (flats), packages (small packets), and postcards, see Notice 123, *Price List*.

Size Limits

Letters: See 241.212
Postcards: See 241.221
Large Envelopes (Flats): See 241.232
Packages (Small Packets): See 241.242 and 241.243

Airmail M-bags (260) — Direct Sack to One Addressee Price Group 9

Refer to Notice 123, *Price List*, for the applicable retail, commercial base, or commercial plus price.
Weight Limit: 66 lbs.

Matter for the Blind (270)

Free when sent as First-Class Mail International, including Priority Mail International Flat Rate Envelopes and Small Flat Rate Priced Boxes. Weight limit: 4 pounds.
Free when sent as Priority Mail International. Weight limit: 15 pounds.

Extra Services

Certificate of Mailing (313)

Individual Pieces	Fee
Individual article (PS Form 3817)	$1.15
Firm mailing books (PS Form 3877), per article listed (minimum 3)	0.44
Duplicate copy of PS Form 3817 or PS Form 3877 (per page)	1.15
Bulk Quantities	**Fee**
First 1,000 pieces (or fraction thereof)	$6.70
Each additional 1,000 pieces (or fraction thereof)	0.80
Duplicate copy of PS Form 3606	1.15

COD and Certified **NOT** for International Mail

International Business Reply Service (382)

Fee: Envelopes up to 2 ounces $1.50; Cards $1.00

International Postal Money Order (371)

NOT Available

International Reply Coupons (381) **Fee:** $2.20

Registered Mail (330) **Fee:** $11.75

Maximum Indemnity: $47.33
Available for First-Class Mail International, including postcards and Flat Rate Envelopes and Small Flat Rate Priced Boxes, and matter for the blind or other physically handicapped persons. Not applicable to M-bags.

Restricted Delivery (350) NOT Available

Return Receipt (340) **Fee:** $2.35

Available for registered mail and insured Priority Mail International parcels only.

Mauritania

Country Conditions for Mailing

Prohibitions (130)

Coins; banknotes; currency notes (paper money); traveler's checks; securities of any kind payable to bearer; platinum, gold or silver, manufactured or not; precious stones; jewelry; and other valuable articles.
Printed or written matter, including designs or emblems, capable of promoting crime or public disorder.
Radioactive materials.
Rough diamonds.
Switchblade knives, blackjacks, daggers, and other concealable offensive weapons. Firearms, except for government use.
Watches.
Weighing and measuring instruments not calibrated in the metric system.

Restrictions

Tobacco or cigarettes. The packages must bear the words "Vente en Republique Islamique de Mauritanie" printed in letters at least 1-1/4 inches high below the trademark.

Observations

Import permits or licenses are required for many types of goods; therefore, the sender should ascertain from the addressee before mailing whether the necessary documents are held.

Customs Forms Required (123)

First-Class Mail International items and Priority Mail International Flat Rate Envelopes and Small Flat Rate Priced Boxes:
PS Form 2976 (see 123.61)
Priority Mail International parcels:
PS Form 2976-A inside 2976-E (envelope)

Global Express Guaranteed (210) Price Group 4

Refer to Notice 123, *Price List*, for the applicable retail, commercial base, or commercial plus price.
Weight Limit: 70 lbs.

Insurance (212.5)

Insured Amount not over	Fee	Insured Amount not over	Fee
$100	No Fee	For document reconstruction insurance or non-document insurance coverage above $800, add $1.00 per $100 or fraction thereof, up to a maximum of $2,499 per shipment.	
200	$1.00		
300	2.00		
400	3.00		
500	4.00		
600	5.00		
700	6.00		
800	7.00	$2,499 max.	$24.00

Value Limit (212.1)

The maximum value of a GXG shipment to this country is $2,499 or a lesser amount if limited by content or value.

Size Limits (211.22)

The surface area of the address side of the item to be mailed must be large enough to completely contain the Global Express Guaranteed Air Waybill/Shipping Invoice (shipping label), postage, endorsement, and any applicable markings. The shipping label is approximately 5.5 inches high and 9.5 inches long.
Maximum length: 46 inches
Maximum width: 35 inches
Maximum height: 46 inches
Maximum length and girth combined: 108 inches

General Conditions for Mailing

See Publication 141, *Global Express Guaranteed Service Guide,* for information about areas served in the destination country, allowable contents, packaging and labeling requirements, tracking and tracing, service standards, and other conditions for mailing.

Express Mail International (220) Price Group 7

Refer to Notice 123, *Price List*, for the applicable retail, commercial base, or commercial plus price.
Weight Limit: 66 lbs.

Express Mail International — Flat Rate Envelope and Flat Rate Boxes

The maximum weight for the Express Mail International Flat Rate Envelope and the Express Mail International Flat Rate Boxes is 20 pounds. Refer to Notice 123, *Price List*, for the applicable retail, commercial base, or commercial plus price.

Insurance (222.8)

Available for **Express Mail International merchandise shipments** only

Insured Amount not over	Fee	Insured Amount not over	Fee
$100	No Fee	For insurance coverage above $2,000, add $1.50 for each $500 or fraction thereof, up to a maximum of $5,000 per shipment.	
200	$0.85		
500	2.35		
1,000	3.85		
1,500	5.35		
2,000	6.85	$5,000 max.	$15.85

Articles Admitted	Required Customs Form/Endorsement
Correspondence and business papers.	PS Form 2976, *Customs — CN 22 and Sender's Declaration.* Endorse item clearly next to mailing label as BUSINESS PAPERS.
Merchandise samples without commercial value.	PS Form 2976, *Customs — CN 22 and Sender's Declaration.*
Merchandise and all articles subject to customs duty.	PS Form 2976-A, *Customs Declaration and Dispatch Note CP 72,* inside a PS Form 2976-E, *Customs Declaration Envelope CP 91.*

Size Limits (221.52)

Maximum length: 36 inches
Maximum length and girth combined: 79 inches

Notes:

1. A commercial invoice must be included with all commercial shipments.
2. Coins; banknotes; currency notes, including paper money; securities of any kind payable to bearer; traveler's checks; platinum, gold, and silver; precious stones; jewelry; watches; and other valuable articles are prohibited in Express Mail International shipments to Mauritania.

Reciprocal Service Name: Express Post International

Country Code: MR

Areas Served:

Aioun El Atrouss	Kiffa	Selibaby
Akjoujt	Nema	Tidjikja
Aleg	Nouadhibou	Zouerate
Atar	Nouakchott	
Kaedi	Rosso	

Priority Mail International (230) Price Group 7

Refer to Notice 123, *Price List*, for the applicable retail, commercial base, or commercial plus price.
Weight Limit: 44 lbs.

Note: *Ordinary Priority Mail International includes indemnity at no cost based on weight. (See 230.)*

Priority Mail International — Flat Rate

Flat Rate Envelopes or Small Flat Rate Priced Boxes: The maximum weight is 4 pounds. Refer to Notice 123, *Price List*, for the applicable retail, commercial base, or commercial plus price.

Flat Rate Boxes — Medium and Large: The maximum weight is 20 pounds, or the limit set by the individual country, whichever is less. Refer to Notice 123, *Price List*, for the retail, commercial base, or commercial plus price.

Insurance (232.92)

Available for **Priority Mail International merchandise parcels** only (see 323.72 for markings)

Insured Amount not over	Fee
$50	$2.45
100	3.60
200	4.75
300	5.90
400	7.05
500	8.20
600	9.35
635 max.	10.50

Size Limits (231.22)

Maximum length: 42 inches
Maximum length and girth combined: 79 inches

First-Class Mail International (240) Price Group 7

For the prices and maximum weights for letters, large envelopes (flats), packages (small packets), and postcards, see Notice 123, *Price List*.

Size Limits

Letters: See 241.212
Postcards: See 241.221
Large Envelopes (Flats): See 241.232
Packages (Small Packets): See 241.242 and 241.243

Airmail M-bags (260) — Direct Sack to One Addressee Price Group 7

Refer to Notice 123, *Price List*, for the applicable retail, commercial base, or commercial plus price.
Weight Limit: 66 lbs.

Matter for the Blind (270) NOT Available

Extra Services

Certificate of Mailing (313)

Individual Pieces	Fee
Individual article (PS Form 3817)	$1.15
Firm mailing books (PS Form 3877), per article listed (minimum 3)	0.44
Duplicate copy of PS Form 3817 or PS Form 3877 (per page)	1.15

Bulk Quantities	Fee
First 1,000 pieces (or fraction thereof)	$6.70
Each additional 1,000 pieces (or fraction thereof)	0.80
Duplicate copy of PS Form 3606	1.15

COD and Certified **NOT** for International Mail

International Business Reply Service (382)

Fee: Envelopes up to 2 ounces $1.50; Cards $1.00

International Postal Money Order (371)

NOT Available

International Reply Coupons (381) **Fee:** $2.20

Registered Mail (330) **Fee:** $11.75

Maximum Indemnity: $47.33
Available for First-Class Mail International, including postcards and Flat Rate Envelopes and Small Flat Rate Priced Boxes, and matter for the blind or other physically handicapped persons. Not applicable to M-bags.

Restricted Delivery (350) NOT Available

Return Receipt (340) **Fee:** $2.35

Available for registered mail and insured Priority Mail International parcels only.

Mauritius

Country Conditions for Mailing

Prohibitions (130)
All varieties of maize; tea.
Ammunition, charged metal firing caps, and cartridges for small arms.
Coins; banknotes; currency notes (paper money); securities payable to bearer; traveler's checks; platinum, gold or silver, manufactured or not; precious stones; jewelry; and other valuable articles.
Perishable infectious biological substances.
Perishable noninfectious biological substances.
Radioactive materials.
Seditious printed matter, paintings, books, and publications.
Used clothing intended for sale.

Restrictions
Drugs and medicines may only be addressed to physicians, dentists, pharmacists, or veterinarians.
Import permit is required for radiosets and spare parts, thereof.

Observations
Import permits or licenses are required for many types of goods; therefore, senders should ascertain from the addressee before mailing whether the necessary documents are held.

Customs Forms Required (123)
First-Class Mail International items and Priority Mail International Flat Rate Envelopes and Small Flat Rate Priced Boxes:
PS Form 2976 (see 123.61)
Priority Mail International parcels:
PS Form 2976-A inside 2976-E (envelope)

Global Express Guaranteed (210) Price Group 4

Refer to Notice 123, *Price List*, for the applicable retail, commercial base, or commercial plus price.
Weight Limit: 70 lbs.

Insurance (212.5)

Insured Amount not over	Fee	Insured Amount not over	Fee
$100	No Fee	For document reconstruction insurance or non-document insurance coverage above $800, add $1.00 per $100 or fraction thereof, up to a maximum of $2,499 per shipment.	
200	$1.00		
300	2.00		
400	3.00		
500	4.00		
600	5.00		
700	6.00		
800	7.00	$2,499 max.	$24.00

Value Limit (212.1)
The maximum value of a GXG shipment to this country is $2,499 or a lesser amount if limited by content or value.

Size Limits (211.22)
The surface area of the address side of the item to be mailed must be large enough to completely contain the Global Express Guaranteed Air Waybill/Shipping Invoice (shipping label), postage, endorsement, and any applicable markings. The shipping label is approximately 5.5 inches high and 9.5 inches long.
Maximum length: 46 inches
Maximum width: 35 inches
Maximum height: 46 inches
Maximum length and girth combined: 108 inches

General Conditions for Mailing
See Publication 141, *Global Express Guaranteed Service Guide,* for information about areas served in the destination country, allowable contents, packaging and labeling requirements, tracking and tracing, service standards, and other conditions for mailing.

Express Mail International (220) Price Group 7

Refer to Notice 123, *Price List*, for the applicable retail, commercial base, or commercial plus price.
Weight Limit: 66 lbs.

Express Mail International — Flat Rate Envelope and Flat Rate Boxes
The maximum weight for the Express Mail International Flat Rate Envelope and the Express Mail International Flat Rate Boxes is 20 pounds. Refer to Notice 123, *Price List*, for the applicable retail, commercial base, or commercial plus price.

Insurance (222.8)
Available for **Express Mail International merchandise shipments** only

Insured Amount not over	Fee	Insured Amount not over	Fee
$100	No Fee	For insurance coverage above $2,000, add $1.50 for each $500 or fraction thereof, up to a maximum of $5,000 per shipment.	
200	$0.85		
500	2.35		
1,000	3.85		
1,500	5.35		
2,000	6.85	$5,000 max.	$15.85

Articles Admitted	Required Customs Form/Endorsement
Correspondence and business papers.	PS Form 2976, *Customs — CN 22 and Sender's Declaration.* Endorse item clearly next to mailing label as BUSINESS PAPERS.
Merchandise samples without commercial value.	PS Form 2976, *Customs — CN 22 and Sender's Declaration.*
Merchandise and all articles subject to customs duty.	PS Form 2976-A, *Customs Declaration and Dispatch Note CP 72,* inside a PS Form 2976-E, *Customs Declaration Envelope CP 91.*

Size Limits (221.52)
Maximum length: 36 inches
Maximum length and girth combined: 79 inches

Notes:
1. A commercial invoice must be included with all commercial shipments.
2. Coins; banknotes; currency notes, including paper money; securities of any kind payable to bearer; traveler's checks; platinum, gold, and silver; precious stones; jewelry; watches; and other valuable articles are prohibited in Express Mail International shipments to Mauritius.

Reciprocal Service Name: EMS/Speedpost

Country Code: MU

Areas Served: All

Priority Mail International (230) Price Group 7

Refer to Notice 123, *Price List*, for the applicable retail, commercial base, or commercial plus price.
Weight Limit: 44 lbs.

Note: *Ordinary Priority Mail International includes indemnity at no cost based on weight. (See 230.)*

Priority Mail International — Flat Rate

Flat Rate Envelopes or Small Flat Rate Priced Boxes: The maximum weight is 4 pounds. Refer to Notice 123, *Price List*, for the applicable retail, commercial base, or commercial plus price.

Flat Rate Boxes — Medium and Large: The maximum weight is 20 pounds, or the limit set by the individual country, whichever is less. Refer to Notice 123, *Price List*, for the retail, commercial base, or commercial plus price.

Insurance (232.92)

Available for **Priority Mail International merchandise parcels** only (see 323.72 for markings)

Insured Amount not over	Fee
$50	$2.45
100	3.60
165 max.	4.75

Size Limits (231.22)

Maximum length: 42 inches
Maximum length and girth combined: 79 inches

First-Class Mail International (240) Price Group 7

For the prices and maximum weights for letters, large envelopes (flats), packages (small packets), and postcards, see Notice 123, *Price List*.

Size Limits

Letters: See 241.212
Postcards: See 241.221
Large Envelopes (Flats): See 241.232
Packages (Small Packets): See 241.242 and 241.243

Airmail M-bags (260) — Direct Sack to One Addressee Price Group 7

Refer to Notice 123, *Price List*, for the applicable retail, commercial base, or commercial plus price.
Weight Limit: 66 lbs.

Matter for the Blind (270)

Free when sent as First-Class Mail International, including Priority Mail International Flat Rate Envelopes and Small Flat Rate Priced Boxes. Weight limit: 4 pounds.
Free when sent as Priority Mail International. Weight limit: 15 pounds.

Extra Services

Certificate of Mailing (313)

Individual Pieces	Fee
Individual article (PS Form 3817)	$1.15
Firm mailing books (PS Form 3877), per article listed (minimum 3)	0.44
Duplicate copy of PS Form 3817 or PS Form 3877 (per page)	1.15
Bulk Quantities	**Fee**
First 1,000 pieces (or fraction thereof)	$6.70
Each additional 1,000 pieces (or fraction thereof)	0.80
Duplicate copy of PS Form 3606	1.15

COD and Certified

NOT for International Mail

International Business Reply Service (382)

Fee: Envelopes up to 2 ounces $1.50; Cards $1.00

International Postal Money Order (371)

NOT Available

International Reply Coupons (381)

Fee: $2.20

Registered Mail (330)

Fee: $11.75

Maximum Indemnity: $47.33
Available for First-Class Mail International, including postcards and Flat Rate Envelopes and Small Flat Rate Priced Boxes, and matter for the blind or other physically handicapped persons. Not applicable to M-bags.

Restricted Delivery (350)

NOT Available

Return Receipt (340)

Fee: $2.35

Available for registered mail and insured Priority Mail International parcels only.

Mexico

Country Conditions for Mailing

Prohibitions (130)

Ammunition, firing caps, and loaded metal cartridges for portable firearms.
Coins; banknotes; currency notes (paper money); securities payable to bearer; traveler's checks; platinum, gold, or silver, manufactured or not; precious stones; jewelry; and other valuable articles.
Meat and products derived from pork.
Perishable confectionery, pastries, fruit, and vegetables.
Perishable infectious biological substances.
Perishable noninfectious biological substances.
Pistols and other devices for emitting tear gas.
Radioactive materials.
Tickets, lists, and circulars for foreign lotteries.
Works infringing copyrights covering Mexico.

Restrictions

Chocolate and products made of chocolate require prior authorization from the Mexican Secretary of Commerce.
Medicinal products, beauty products, cosmetics, and toilet articles are admitted only by prior approval of the Department of Public Health in Mexico.

Observations

1. Goods whose commercial value exceed U.S. $70 dollars should be accompanied by a commercial invoice.
2. Import permits or licenses are required for merchandise exceeding 5000 Mexican pesos. Merchandise valued less than 5000 pesos does not require import permits.
3. To speed delivery of items subject to customs duty, commercial shipments must be accompanied by two copies of the commercial invoice, duly translated into Spanish, and inserted inside the package. Addressees will be fined if these documents are missing.

Customs Forms Required (123)

First-Class Mail International items and Priority Mail International Flat Rate Envelopes and Small Flat Rate Priced Boxes:
PS Form 2976 (see 123.61)
Priority Mail International parcels:
PS Form 2976-A inside 2976-E (envelope)

Global Express Guaranteed (210) Price Group 2

Refer to Notice 123, *Price List*, for the applicable retail, commercial base, or commercial plus price.
Weight Limit: 70 lbs.

Insurance (212.5)

Insured Amount not over	Fee	Insured Amount not over	Fee
$100	No Fee	For document reconstruction insurance or non-document insurance coverage above $800, add $1.00 per $100 or fraction thereof, up to a maximum of $2,499 per shipment.	
200	$1.00		
300	2.00		
400	3.00		
500	4.00		
600	5.00		
700	6.00		
800	7.00	$2,499 max.	$24.00

Value Limit (212.1)

The maximum value of a GXG shipment to this country is $2,499 or a lesser amount if limited by content or value.

Size Limits (211.22)

The surface area of the address side of the item to be mailed must be large enough to completely contain the Global Express Guaranteed Air Waybill/Shipping Invoice (shipping label), postage, endorsement, and any applicable markings. The shipping label is approximately 5.5 inches high and 9.5 inches long.
Maximum length: 46 inches
Maximum width: 35 inches
Maximum height: 46 inches
Maximum length and girth combined: 108 inches

General Conditions for Mailing

See Publication 141, *Global Express Guaranteed Service Guide,* for information about areas served in the destination country, allowable contents, packaging and labeling requirements, tracking and tracing, service standards, and other conditions for mailing.

Express Mail International (220) Price Group 2

Refer to Notice 123, *Price List*, for the applicable retail, commercial base, or commercial plus price.
Weight Limit: 44 lbs.

Express Mail International — Flat Rate Envelope and Flat Rate Boxes

The maximum weight for the Express Mail International Flat Rate Envelope and the Express Mail International Flat Rate Boxes is 20 pounds. Refer to Notice 123, *Price List*, for the applicable retail, commercial base, or commercial plus price.

Insurance (222.8)

Available for **Express Mail International merchandise shipments** only

Insured Amount not over	Fee	Insured Amount not over	Fee
$100	No Fee	For insurance coverage above $2,000, add $1.50 for each $500 or fraction thereof, up to a maximum of $5,000 per shipment.	
200	$0.85		
500	2.35		
1,000	3.85		
1,500	5.35		
2,000	6.85	$5,000 max.	$15.85

Articles Admitted	Required Customs Form/Endorsement
Correspondence, business papers, and documents.	No form required. Endorse item clearly next to mailing label as BUSINESS PAPERS.
Microfiche, microfilm, computer data (including magnetic tapes and disks), and merchandise samples.	PS Form 2976, *Customs — CN 22 and Sender's Declaration.*
Merchandise and all articles subject to customs duty.	PS Form 2976-A, *Customs Declaration and Dispatch Note CP 72,* inside a PS Form 2976-E, *Customs Declaration Envelope CP 91.*

Size Limits (221.52)

Maximum length: 36 inches
Maximum length and girth combined: 79 inches

Notes:

1. Coins; banknotes; currency notes, including paper money; securities of any kind payable to bearer; traveler's checks; platinum, gold, and silver; precious stones; jewelry; watches; and other valuable articles are prohibited in Express Mail International shipments to Mexico.
2. An import license is required for microfilm, microfiche, and computer data.
3. To avoid confusion with domestic five-digit ZIP Codes, mailers should place the five-digit Postal Code for the destination city in Mexico in front of the city name, and the capitalized country name should appear as the last line of the address. For example:

   50000 Toluca
   MEXICO

Reciprocal Service Name: Servicio de Correspondencia Agrupada (SERCA) or Correos Acelerado International (CAI)

Country Code: MX

Areas Served: All

Priority Mail International (230) Price Group 2

Refer to Notice 123, *Price List*, for the applicable retail, commercial base, or commercial plus price.
Weight Limit: 44 lbs.

Note: *Ordinary Priority Mail International includes indemnity at no cost based on weight. (See 230.)*

Priority Mail International — Flat Rate

Flat Rate Envelopes or Small Flat Rate Priced Boxes: The maximum weight is 4 pounds. Refer to Notice 123, *Price List*, for the applicable retail, commercial base, or commercial plus price.

Flat Rate Boxes — Medium and Large: The maximum weight is 20 pounds, or the limit set by the individual country, whichever is less. Refer to Notice 123, *Price List*, for the retail, commercial base, or commercial plus price.

Insurance (232.92) NOT Available

Size Limits (231.22)

Maximum length: 42 inches
Maximum length and girth combined: 79 inches

First-Class Mail International (240) Price Group 2

For the prices and maximum weights for letters, large envelopes (flats), packages (small packets), and postcards, see Notice 123, *Price List*.

Size Limits

Letters: See 241.212
Postcards: See 241.221
Large Envelopes (Flats): See 241.232
Packages (Small Packets): See 241.242 and 241.243

Airmail M-bags (260) — Direct Sack to One Addressee Price Group 2

Refer to Notice 123, *Price List*, for the applicable retail, commercial base, or commercial plus price.
Weight Limit: 66 lbs.

Matter for the Blind (270)

Free when sent as First-Class Mail International, including Priority Mail International Flat Rate Envelopes and Small Flat Rate Priced Boxes. Weight limit: 4 pounds.
Free when sent as Priority Mail International. Weight limit: 15 pounds.

Extra Services

Certificate of Mailing (313)

Individual Pieces	Fee
Individual article (PS Form 3817)	$1.15
Firm mailing books (PS Form 3877), per article listed (minimum 3)	0.44
Duplicate copy of PS Form 3817 or PS Form 3877 (per page)	1.15
Bulk Quantities	**Fee**
First 1,000 pieces (or fraction thereof)	$6.70
Each additional 1,000 pieces (or fraction thereof)	0.80
Duplicate copy of PS Form 3606	1.15

COD and Certified **NOT** for International Mail

International Business Reply Service (382)

Fee: Envelopes up to 2 ounces $1.50; Cards $1.00

International Postal Money Order (371)

Use MO Form MP1
Maximum Amount Available: $700 **Fee:** $4.45
Money Order Inquiry: **Fee:** $5.50

International Reply Coupons (381) **Fee:** $2.20

Registered Mail (330) **Fee:** $11.75

Maximum Indemnity: $47.33
Available for First-Class Mail International, including postcards and Flat Rate Envelopes and Small Flat Rate Priced Boxes, and matter for the blind or other physically handicapped persons. Not applicable to M-bags.

Restricted Delivery (350) **Fee:** $4.55

Available for registered mail with a return receipt.
Endorsements: A remettre en main propre.
Deliver to addressee in person.

Return Receipt (340) **Fee:** $2.35

Available for registered mail only.

Moldova

Country Conditions for Mailing

Prohibitions (130)
Bank notes; currency notes; and securities payable to bearer.
Explosives, pyrotechnic products, matches; materials regarded as combustible or dangerous.
Perishable infectious biological substances.
Perishable noninfectious biological substances.
Printed books, newspapers, pictures, publications, manuscripts, and other products of the printing industry that are contrary to public order; obscene or immoral articles.
Radioactive materials.

Restrictions
Medicaments and other products used in medical treatment are subject to prior authorization granted by the Ministry of Health (Pharmaceutical and Medical Equipment) or by the Ministry of Agriculture and Food (Veterinary Service).

Observations
None

Customs Forms Required (123)
First-Class Mail International items and Priority Mail International Flat Rate Envelopes and Small Flat Rate Priced Boxes:
PS Form 2976 (see 123.61)
Priority Mail International parcels:
PS Form 2976-A inside 2976-E (envelope)

Global Express Guaranteed (210) Price Group 4

Refer to Notice 123, *Price List*, for the applicable retail, commercial base, or commercial plus price.
Weight Limit: 70 lbs.

Insurance (212.5)

Insured Amount not over	Fee	Insured Amount not over	Fee
$100	No Fee	For document reconstruction insurance or non-document insurance coverage above $800, add $1.00 per $100 or fraction thereof, up to a maximum of $2,499 per shipment.	
200	$1.00		
300	2.00		
400	3.00		
500	4.00		
600	5.00		
700	6.00		
800	7.00	$2,499 max.	$24.00

Value Limit (212.1)
The maximum value of a GXG shipment to this country is $2,499 or a lesser amount if limited by content or value.

Size Limits (211.22)
The surface area of the address side of the item to be mailed must be large enough to completely contain the Global Express Guaranteed Air Waybill/Shipping Invoice (shipping label), postage, endorsement, and any applicable markings. The shipping label is approximately 5.5 inches high and 9.5 inches long.
Maximum length: 46 inches
Maximum width: 35 inches
Maximum height: 46 inches
Maximum length and girth combined: 108 inches

General Conditions for Mailing
See Publication 141, *Global Express Guaranteed Service Guide,* for information about areas served in the destination country, allowable contents, packaging and labeling requirements, tracking and tracing, service standards, and other conditions for mailing.

Express Mail International (220) Price Group 4

Refer to Notice 123, *Price List*, for the applicable retail, commercial base, or commercial plus price.
Weight Limit: 70 lbs.

Express Mail International — Flat Rate Envelope and Flat Rate Boxes
The maximum weight for the Express Mail International Flat Rate Envelope and the Express Mail International Flat Rate Boxes is 20 pounds. Refer to Notice 123, *Price List*, for the applicable retail, commercial base, or commercial plus price.

Insurance (222.8)
Available for **Express Mail International merchandise shipments** only

Insured Amount not over	Fee	Insured Amount not over	Fee
$100	No Fee	For insurance coverage above $2,000, add $1.50 for each $500 or fraction thereof, up to a maximum of $5,000 per shipment.	
200	$0.85		
500	2.35		
1,000	3.85		
1,500	5.35		
2,000	6.85	$5,000 max.	$15.85

Articles Admitted	Required Customs Form/Endorsement
Correspondence, business papers, and documents.	PS Form 2976, *Customs — CN 22 and Sender's Declaration.* Endorse item clearly next to mailing label as BUSINESS PAPERS.
Merchandise samples without commercial value.	PS Form 2976-A, *Customs Declaration and Dispatch Note CP 72,* inside a PS Form 2976-E, *Customs Declaration Envelope CP 91.*
Merchandise and all articles subject to customs duty.	PS Form 2976-A, *Customs Declaration and Dispatch Note CP 72,* inside a PS Form 2976-E, *Customs Declaration Envelope CP 91.*

Size Limits (221.52)
Maximum length: 36 inches
Maximum length and girth combined: 79 inches

Notes:
1. Addressees are required to obtain import licenses/permits to receive most goods.
2. Coins; banknotes; currency notes, including paper money; securities of any kind payable to bearer; traveler's checks; platinum, gold, and silver; precious stones; jewelry; watches; and other valuable articles are prohibited in Express Mail International shipments to Moldova.

Reciprocal Service Name: EMS

Country Code: MD

Areas Served:
Express Mail International is available ***only*** to the following location:
277000 Chisinau (Kishinev)

Priority Mail International (230) Price Group 4

Refer to Notice 123, *Price List*, for the applicable retail, commercial base, or commercial plus price.
Weight Limit: 70 lbs.

Note: *Ordinary Priority Mail International includes indemnity at no cost based on weight. (See 230.)*

Priority Mail International — Flat Rate
Flat Rate Envelopes or Small Flat Rate Priced Boxes: The maximum weight is 4 pounds. Refer to Notice 123, *Price List*, for the applicable retail, commercial base, or commercial plus price.

Flat Rate Boxes — Medium and Large: The maximum weight is 20 pounds, or the limit set by the individual country, whichever is less. Refer to Notice 123, *Price List*, for the retail, commercial base, or commercial plus price.

Insurance (232.92)
Available for **Priority Mail International merchandise parcels** only (see 323.72 for markings)

Insured Amount not over	Fee	Insured Amount not over	Fee
$50	$2.45		
100	3.60	Add $1.15 for each additional $100 or fraction of insurance coverage.	
200	4.75		
300	5.90		
400	7.05		
500	8.20	$2,915 max.	$36.95

Size Limits (231.22)
Maximum length: 42 inches
Maximum length and girth combined: 79 inches

First-Class Mail International (240) Price Group 4
For the prices and maximum weights for letters, large envelopes (flats), packages (small packets), and postcards, see Notice 123, *Price List*.

Size Limits
Letters: See 241.212
Postcards: See 241.221
Large Envelopes (Flats): See 241.232
Packages (Small Packets): See 241.242 and 241.243

Airmail M-bags (260) — Direct Sack to One Addressee Price Group 4

Refer to Notice 123, *Price List*, for the applicable retail, commercial base, or commercial plus price.
Weight Limit: 66 lbs.

Matter for the Blind (270)
Free when sent as First-Class Mail International, including Priority Mail International Flat Rate Envelopes and Small Flat Rate Priced Boxes. Weight limit: 4 pounds.
Free when sent as Priority Mail International. Weight limit: 15 pounds.

Extra Services

Certificate of Mailing (313)

Individual Pieces	Fee
Individual article (PS Form 3817)	$1.15
Firm mailing books (PS Form 3877), per article listed (minimum 3)	0.44
Duplicate copy of PS Form 3817 or PS Form 3877 (per page)	1.15
Bulk Quantities	**Fee**
First 1,000 pieces (or fraction thereof)	$6.70
Each additional 1,000 pieces (or fraction thereof)	0.80
Duplicate copy of PS Form 3606	1.15

COD and Certified **NOT** for International Mail

International Business Reply Service (382)
Fee: Envelopes up to 2 ounces $1.50; Cards $1.00

International Postal Money Order (371)
NOT Available

International Reply Coupons (381) **Fee:** $2.20

Registered Mail (330) **Fee:** $11.75
Maximum Indemnity: $47.33
Available for First-Class Mail International, including postcards and Flat Rate Envelopes and Small Flat Rate Priced Boxes, and matter for the blind or other physically handicapped persons. Not applicable to M-bags.

Restricted Delivery (350) **Fee:** $4.55
Available for registered mail with a return receipt.
Endorsements: A remettre en main propre.

Return Receipt (340) **Fee:** $2.35
Available for registered mail and insured Priority Mail International parcels only.

Mongolia

Country Conditions for Mailing

Prohibitions (130)
Coins, bank notes, securities payable to bearer, and traveler's checks.
Perishable infectious biological substances.
Radioactive materials.

Restrictions
No list furnished.

Observations
None

Customs Forms Required (123)
First-Class Mail International items and Priority Mail International Flat Rate Envelopes and Small Flat Rate Priced Boxes:
PS Form 2976 (see 123.61)
Priority Mail International parcels:
PS Form 2976-A inside 2976-E (envelope)

Global Express Guaranteed (210) Price Group 4

Refer to Notice 123, *Price List*, for the applicable retail, commercial base, or commercial plus price.
Weight Limit: 70 lbs.

Insurance (212.5)

Insured Amount not over	Fee	Insured Amount not over	Fee
$100	No Fee	For document reconstruction insurance or non-document insurance coverage above $800, add $1.00 per $100 or fraction thereof, up to a maximum of $2,499 per shipment.	
200	$1.00		
300	2.00		
400	3.00		
500	4.00		
600	5.00		
700	6.00		
800	7.00	$2,499 max.	$24.00

Value Limit (212.1)
The maximum value of a GXG shipment to this country is $2,499 or a lesser amount if limited by content or value.

Size Limits (211.22)
The surface area of the address side of the item to be mailed must be large enough to completely contain the Global Express Guaranteed Air Waybill/Shipping Invoice (shipping label), postage, endorsement, and any applicable markings. The shipping label is approximately 5.5 inches high and 9.5 inches long.
Maximum length: 46 inches
Maximum width: 35 inches
Maximum height: 46 inches
Maximum length and girth combined: 108 inches

General Conditions for Mailing
See Publication 141, *Global Express Guaranteed Service Guide,* for information about areas served in the destination country, allowable contents, packaging and labeling requirements, tracking and tracing, service standards, and other conditions for mailing.

Express Mail International (220) Price Group 6

Refer to Notice 123, *Price List*, for the applicable retail, commercial base, or commercial plus price.
Weight Limit: 66 lbs.

Express Mail International — Flat Rate Envelope and Flat Rate Boxes
The maximum weight for the Express Mail International Flat Rate Envelope and the Express Mail International Flat Rate Boxes is 20 pounds. Refer to Notice 123, *Price List*, for the applicable retail, commercial base, or commercial plus price.

Insurance (222.8)
Available for **Express Mail International merchandise shipments** only

Insured Amount not over	Fee	Insured Amount not over	Fee
$100	No Fee	For insurance coverage above $2,000, add $1.50 for each $500 or fraction thereof, up to a maximum of $5,000 per shipment.	
200	$0.85		
500	2.35		
1,000	3.85		
1,500	5.35		
2,000	6.85	$5,000 max.	$15.85

Articles Admitted	Required Customs Form/Endorsement
Correspondence and business papers.	PS Form 2976, *Customs — CN 22 and Sender's Declaration.* Endorse item clearly next to mailing label as BUSINESS PAPERS.
Merchandise samples without commercial value and not subject to customs duty.	PS Form 2976, *Customs — CN 22 and Sender's Declaration.*
Merchandise and all articles subject to customs duty.	PS Form 2976-A, *Customs Declaration and Dispatch Note CP 72,* inside a PS Form 2976-E, *Customs Declaration Envelope CP 91.*

Size Limits (221.52)
Maximum length: 36 inches
Maximum length and girth combined: 79 inches

Notes:
1. Coins; banknotes; currency notes, including paper money; securities of any kind payable to bearer; traveler's checks; platinum, gold, and silver; precious stones; jewelry; watches; and other valuable articles are prohibited in Express Mail International shipments to Mongolia.
2. All items prohibited in regular international mail are also prohibited in Express Mail International to Mongolia.
3. Express Mail International items are delivered Monday through Saturday. There are no deliveries on Sundays and national holidays. There is no service guarantee on Express Mail International items.
4. The initial shipment date (item 3 of PS Form 5637, *Express Mail Corporate Account/Custom Designed Form*) for Custom Designed Service should be at least 10 days after one copy of the agreement is sent to:

   CENTRAL POST OFFICE
   EMS SECTOR
   PO BOX 1106
   ULAN BATOR 210 613
   MONGOLIA

Reciprocal Service Name: EMS

Country Code: MN

Areas Served: Ulan Bator and all provincial centers (aimaks)

Priority Mail International (230) Price Group 6

Refer to Notice 123, *Price List*, for the applicable retail, commercial base, or commercial plus price.
Weight Limit: 66 lbs.

Note: *Ordinary Priority Mail International includes indemnity at no cost based on weight. (See 230.)*

Priority Mail International — Flat Rate

Flat Rate Envelopes or Small Flat Rate Priced Boxes: The maximum weight is 4 pounds. Refer to Notice 123, *Price List*, for the applicable retail, commercial base, or commercial plus price.

Flat Rate Boxes — Medium and Large: The maximum weight is 20 pounds, or the limit set by the individual country, whichever is less. Refer to Notice 123, *Price List*, for the retail, commercial base, or commercial plus price.

Insurance (232.92) NOT Available

Size Limits (231.22)

Maximum length: 42 inches
Maximum length and girth combined: 79 inches

First-Class Mail International (240) Price Group 6

For the prices and maximum weights for letters, large envelopes (flats), packages (small packets), and postcards, see Notice 123, *Price List*.

Size Limits

Letters: See 241.212
Postcards: See 241.221
Large Envelopes (Flats): See 241.232
Packages (Small Packets): See 241.242 and 241.243

Airmail M-bags (260) — Direct Sack to One Addressee Price Group 6

Refer to Notice 123, *Price List*, for the applicable retail, commercial base, or commercial plus price.
Weight Limit: 66 lbs.

Matter for the Blind (270)

Free when sent as First-Class Mail International, including Priority Mail International Flat Rate Envelopes and Small Flat Rate Priced Boxes. Weight limit: 4 pounds.
Free when sent as Priority Mail International. Weight limit: 15 pounds.

Extra Services

Certificate of Mailing (313)

Individual Pieces	Fee
Individual article (PS Form 3817)	$1.15
Firm mailing books (PS Form 3877), per article listed (minimum 3)	0.44
Duplicate copy of PS Form 3817 or PS Form 3877 (per page)	1.15
Bulk Quantities	**Fee**
First 1,000 pieces (or fraction thereof)	$6.70
Each additional 1,000 pieces (or fraction thereof)	0.80
Duplicate copy of PS Form 3606	1.15

COD and Certified **NOT** for International Mail

International Business Reply Service (382)

Fee: Envelopes up to 2 ounces $1.50; Cards $1.00

International Postal Money Order (371)

NOT Available

International Reply Coupons (381) **Fee:** $2.20

Registered Mail (330) **Fee:** $11.75

Maximum Indemnity: $47.33
Available for First-Class Mail International, including postcards and Flat Rate Envelopes and Small Flat Rate Priced Boxes, and matter for the blind or other physically handicapped persons. Not applicable to M-bags.

Restricted Delivery (350) **Fee:** $4.55

Available for registered mail with a return receipt.
Endorsements: A remettre en main propre.

Return Receipt (340) **Fee:** $2.35

Available for registered mail only.

Montenegro

Country Conditions for Mailing

Prohibitions (130)
No list furnished.

Restrictions
No list furnished.

Observations
None

Customs Forms Required (123)
First-Class Mail International items and Priority Mail International Flat Rate Envelopes and Small Flat Rate Priced Boxes:
PS Form 2976 (see 123.61)
Priority Mail International parcels:
PS Form 2976-A inside 2976-E (envelope)

Global Express Guaranteed (210) Price Group 4

Refer to Notice 123, *Price List*, for the applicable retail, commercial base, or commercial plus price.
Weight Limit: 70 lbs.

Insurance (212.5)

Insured Amount not over	Fee	Insured Amount not over	Fee
$100	No Fee	For document reconstruction insurance or non-document insurance coverage above $800, add $1.00 per $100 or fraction thereof, up to a maximum of $2,499 per shipment.	
200	$1.00		
300	2.00		
400	3.00		
500	4.00		
600	5.00		
700	6.00		
800	7.00	$2,499 max.	$24.00

Value Limit (212.1)
The maximum value of a GXG shipment to this country is $2,499 or a lesser amount if limited by content or value.

Size Limits (211.22)
The surface area of the address side of the item to be mailed must be large enough to completely contain the Global Express Guaranteed Air Waybill/Shipping Invoice (shipping label), postage, endorsement, and any applicable markings. The shipping label is approximately 5.5 inches high and 9.5 inches long.
Maximum length: 46 inches
Maximum width: 35 inches
Maximum height: 46 inches
Maximum length and girth combined: 108 inches

General Conditions for Mailing
See Publication 141, *Global Express Guaranteed Service Guide,* for information about areas served in the destination country, allowable contents, packaging and labeling requirements, tracking and tracing, service standards, and other conditions for mailing.

Express Mail International (220)
Not Available

Priority Mail International (230) Price Group 5

Refer to Notice 123, *Price List*, for the applicable retail, commercial base, or commercial plus price.
Weight Limit: 70 lbs.

Note: *Ordinary Priority Mail International includes indemnity at no cost based on weight. (See 230.)*

Priority Mail International — Flat Rate
Flat Rate Envelopes or Small Flat Rate Priced Boxes: The maximum weight is 4 pounds. Refer to Notice 123, *Price List*, for the applicable retail, commercial base, or commercial plus price.

Flat Rate Boxes — Medium and Large: The maximum weight is 20 pounds, or the limit set by the individual country, whichever is less. Refer to Notice 123, *Price List*, for the retail, commercial base, or commercial plus price.

Insurance (232.92) NOT Available

Size Limits (231.22)
Maximum length: 42 inches
Maximum length and girth combined: 79 inches

First-Class Mail International (240) Price Group 5
For the prices and maximum weights for letters, large envelopes (flats), packages (small packets), and postcards, see Notice 123, *Price List*.

Size Limits
Letters: See 241.212
Postcards: See 241.221
Large Envelopes (Flats): See 241.232
Packages (Small Packets): See 241.242 and 241.243

Airmail M-bags (260) — Direct Sack to One Addressee Price Group 5

Refer to Notice 123, *Price List*, for the applicable retail, commercial base, or commercial plus price.
Weight Limit: 66 lbs.

Matter for the Blind (270)
Free when sent as First-Class Mail International, including Priority Mail International Flat Rate Envelopes and Small Flat Rate Priced Boxes. Weight limit: 4 pounds.
Free when sent as Priority Mail International. Weight limit: 15 pounds.

Extra Services

Certificate of Mailing (313)

Individual Pieces	Fee
Individual article (PS Form 3817)	$1.15
Firm mailing books (PS Form 3877), per article listed (minimum 3)	0.44
Duplicate copy of PS Form 3817 or PS Form 3877 (per page)	1.15
Bulk Quantities	**Fee**
First 1,000 pieces (or fraction thereof)	$6.70
Each additional 1,000 pieces (or fraction thereof)	0.80
Duplicate copy of PS Form 3606	1.15

COD and Certified

NOT for International Mail

International Business Reply Service (382)

Fee: Envelopes up to 2 ounces $1.50; Cards $1.00

International Postal Money Order (371)

NOT Available

International Reply Coupons (381)

Fee: $2.20

Registered Mail (330)

NOT Available

Restricted Delivery (350)

NOT Available

Return Receipt (340)

NOT Available

Montserrat

Country Conditions for Mailing

Prohibitions (130)
Perishable infectious biological substances.
Radioactive materials.

Restrictions
No list furnished.

Observations
None

Customs Forms Required (123)
First-Class Mail International items and Priority Mail International Flat Rate Envelopes and Small Flat Rate Priced Boxes:
PS Form 2976 (see 123.61)
Priority Mail International parcels:
PS Form 2976-A inside 2976-E (envelope)

Global Express Guaranteed (210) Price Group 7

Refer to Notice 123, *Price List*, for the applicable retail, commercial base, or commercial plus price.
Weight Limit: 70 lbs.

Insurance (212.5)

Insured Amount not over	Fee	Insured Amount not over	Fee
$100	No Fee	For document reconstruction insurance or non-document insurance coverage above $800, add $1.00 per $100 or fraction thereof, up to a maximum of $2,499 per shipment.	
200	$1.00		
300	2.00		
400	3.00		
500	4.00		
600	5.00		
700	6.00		
800	7.00	$2,499 max.	$24.00

Value Limit (212.1)
The maximum value of a GXG shipment to this country is $2,499 or a lesser amount if limited by content or value.

Size Limits (211.22)
The surface area of the address side of the item to be mailed must be large enough to completely contain the Global Express Guaranteed Air Waybill/Shipping Invoice (shipping label), postage, endorsement, and any applicable markings. The shipping label is approximately 5.5 inches high and 9.5 inches long.
Maximum length: 46 inches
Maximum width: 35 inches
Maximum height: 46 inches
Maximum length and girth combined: 108 inches

General Conditions for Mailing
See Publication 141, *Global Express Guaranteed Service Guide,* for information about areas served in the destination country, allowable contents, packaging and labeling requirements, tracking and tracing, service standards, and other conditions for mailing.

Express Mail International (220)
Not Available

Priority Mail International (230) Price Group 9

Refer to Notice 123, *Price List*, for the applicable retail, commercial base, or commercial plus price.
Weight Limit: 44 lbs.

Note: *Ordinary Priority Mail International includes indemnity at no cost based on weight. (See 230.)*

Priority Mail International — Flat Rate
Flat Rate Envelopes or Small Flat Rate Priced Boxes: The maximum weight is 4 pounds. Refer to Notice 123, *Price List*, for the applicable retail, commercial base, or commercial plus price.

Flat Rate Boxes — Medium and Large: The maximum weight is 20 pounds, or the limit set by the individual country, whichever is less. Refer to Notice 123, *Price List*, for the retail, commercial base, or commercial plus price.

Insurance (232.92)
Available for **Priority Mail International merchandise parcels** only (see 323.72 for markings)

Insured Amount not over	Fee	Insured Amount not over	Fee
$50	$2.45		
100	3.60	Add $1.15 for each additional $100 or fraction of insurance coverage.	
200	4.75		
300	5.90		
400	7.05		
500	8.20	$2,200 max.	$27.75

Size Limits (231.22)
Maximum length: 42 inches
Maximum length and girth combined: 79 inches

First-Class Mail International (240) Price Group 9
For the prices and maximum weights for letters, large envelopes (flats), packages (small packets), and postcards, see Notice 123, *Price List*.

Size Limits
Letters: See 241.212
Postcards: See 241.221
Large Envelopes (Flats): See 241.232
Packages (Small Packets): See 241.242 and 241.243

Airmail M-bags (260) — Direct Sack to One Addressee Price Group 9

Refer to Notice 123, *Price List*, for the applicable retail, commercial base, or commercial plus price.
Weight Limit: 66 lbs.

Matter for the Blind (270)
Free when sent as First-Class Mail International, including Priority Mail International Flat Rate Envelopes and Small Flat Rate Priced Boxes. Weight limit: 4 pounds.
Free when sent as Priority Mail International. Weight limit: 15 pounds.

Extra Services

Certificate of Mailing (313)

Individual Pieces	Fee
Individual article (PS Form 3817)	$1.15
Firm mailing books (PS Form 3877), per article listed (minimum 3)	0.44
Duplicate copy of PS Form 3817 or PS Form 3877 (per page)	1.15
Bulk Quantities	**Fee**
First 1,000 pieces (or fraction thereof)	$6.70
Each additional 1,000 pieces (or fraction thereof)	0.80
Duplicate copy of PS Form 3606	1.15

COD and Certified

NOT for International Mail

International Business Reply Service (382)

Fee: Envelopes up to 2 ounces $1.50; Cards $1.00

International Postal Money Order (371)

Use MO Form MP1

Maximum Amount Available: $700 **Fee:** $4.45

Money Order Inquiry: **Fee:** $5.50

International Reply Coupons (381)

Fee: $2.20

Registered Mail (330)

Fee: $11.75

Maximum Indemnity: $47.33

Available for First-Class Mail International, including postcards and Flat Rate Envelopes and Small Flat Rate Priced Boxes, and matter for the blind or other physically handicapped persons. Not applicable to M-bags.

Restricted Delivery (350)

NOT Available

Return Receipt (340)

Fee: $2.35

Available for registered mail and insured Priority Mail International parcels only.

Morocco

Country Conditions for Mailing

Prohibitions (130)

Coins; banknotes; currency notes (paper money); traveler's checks; securities of any kind payable to bearer; platinum, gold or silver, manufactured or not; precious stones; jewelry; and other valuable articles.
Lottery tickets and printed matter relating to lotteries.
Radioactive materials.
Weapons and parts thereof, except for the Ministry of War.

Restrictions

Import permits and quota certificates issued by the Ministry of Trade (Morocco) are required for many types of goods. Therefore, the sender should ascertain from the addressee or Moroccan Consulates before mailing whether the necessary documents are held or required.
Used/second-hand clothes are subject to an import permit issued in advance by the Moroccan Ministry of Industry, Commerce, Mines, and Merchant Marine.

Observations

None

Customs Forms Required (123)

First-Class Mail International items and Priority Mail International Flat Rate Envelopes and Small Flat Rate Priced Boxes:
PS Form 2976 (see 123.61)
Priority Mail International parcels:
PS Form 2976-A inside 2976-E (envelope)

Global Express Guaranteed (210) Price Group 4

Refer to Notice 123, *Price List*, for the applicable retail, commercial base, or commercial plus price.
Weight Limit: 70 lbs.

Insurance (212.5)

Insured Amount not over	Fee	Insured Amount not over	Fee
$100	No Fee	For document reconstruction insurance or non-document insurance coverage above $800, add $1.00 per $100 or fraction thereof, up to a maximum of $2,499 per shipment.	
200	$1.00		
300	2.00		
400	3.00		
500	4.00		
600	5.00		
700	6.00		
800	7.00	$2,499 max.	$24.00

Value Limit (212.1)

The maximum value of a GXG shipment to this country is $2,499 or a lesser amount if limited by content or value.

Size Limits (211.22)

The surface area of the address side of the item to be mailed must be large enough to completely contain the Global Express Guaranteed Air Waybill/Shipping Invoice (shipping label), postage, endorsement, and any applicable markings. The shipping label is approximately 5.5 inches high and 9.5 inches long.
Maximum length: 46 inches
Maximum width: 35 inches
Maximum height: 46 inches
Maximum length and girth combined: 108 inches

General Conditions for Mailing

See Publication 141, *Global Express Guaranteed Service Guide,* for information about areas served in the destination country, allowable contents, packaging and labeling requirements, tracking and tracing, service standards, and other conditions for mailing.

Express Mail International (220) Price Group 8

Refer to Notice 123, *Price List*, for the applicable retail, commercial base, or commercial plus price.
Weight Limit: 68 lbs.

Express Mail International — Flat Rate Envelope and Flat Rate Boxes

The maximum weight for the Express Mail International Flat Rate Envelope and the Express Mail International Flat Rate Boxes is 20 pounds. Refer to Notice 123, *Price List*, for the applicable retail, commercial base, or commercial plus price.

Insurance (222.8)

Available for **Express Mail International merchandise shipments** only

Insured Amount not over	Fee	Insured Amount not over	Fee
$100	No Fee	For insurance coverage above $2,000, add $1.50 for each $500 or fraction thereof, up to a maximum of $5,000 per shipment.	
200	$0.85		
500	2.35		
1,000	3.85		
1,500	5.35		
2,000	6.85	$5,000 max.	$15.85

Articles Admitted	Required Customs Form/Endorsement
Correspondence, business papers, and documents.	No form required. Endorse item clearly next to mailing label as BUSINESS PAPERS.
Merchandise samples without commercial value.	PS Form 2976, *Customs — CN 22 and Sender's Declaration.*
Merchandise and all articles subject to customs duty.	PS Form 2976-A, *Customs Declaration and Dispatch Note CP 72,* inside a PS Form 2976-E, *Customs Declaration Envelope CP 91.* A commercial invoice should be included with all commercial shipments.

Size Limits (221.52)

Maximum length: 36 inches
Maximum length and girth combined: 79 inches

Note:
Coins; banknotes; currency notes, including paper money; securities of any kind payable to bearer; traveler's checks; platinum, gold, and silver; precious stones; jewelry; watches; and other valuable articles are prohibited in Express Mail International shipments to Morocco.

Reciprocal Service Name: Courrier Accelere Internationale-EMS

Country Code: MA

Areas Served: All

Priority Mail International (230) Price Group 8

Refer to Notice 123, *Price List*, for the applicable retail, commercial base, or commercial plus price.
Weight Limit: 66 lbs.

Note: *Ordinary Priority Mail International includes indemnity at no cost based on weight. (See 230.)*

Priority Mail International — Flat Rate
Flat Rate Envelopes or Small Flat Rate Priced Boxes: The maximum weight is 4 pounds. Refer to Notice 123, *Price List*, for the applicable retail, commercial base, or commercial plus price.

Flat Rate Boxes — Medium and Large: The maximum weight is 20 pounds, or the limit set by the individual country, whichever is less. Refer to Notice 123, *Price List*, for the retail, commercial base, or commercial plus price.

Insurance (232.92)
Available for **Priority Mail International merchandise parcels** only (see 323.72 for markings)

Insured Amount not over	Fee	Insured Amount not over	Fee
$50	$2.45		
100	3.60	Add $1.15 for each additional $100 or fraction of insurance coverage.	
200	4.75		
300	5.90		
400	7.05		
500	8.20	$5,000 max.	$59.95

Size Limits (231.22)
Maximum length: 42 inches
Maximum length and girth combined: 79 inches

First-Class Mail International (240) Price Group 8
For the prices and maximum weights for letters, large envelopes (flats), packages (small packets), and postcards, see Notice 123, *Price List*.

Size Limits
Letters: See 241.212
Postcards: See 241.221
Large Envelopes (Flats): See 241.232
Packages (Small Packets): See 241.242 and 241.243

Airmail M-bags (260) — Direct Sack to One Addressee Price Group 8

Refer to Notice 123, *Price List*, for the applicable retail, commercial base, or commercial plus price.
Weight Limit: 66 lbs.

Matter for the Blind (270) NOT Available

Extra Services

Certificate of Mailing (313)

Individual Pieces	Fee
Individual article (PS Form 3817)	$1.15
Firm mailing books (PS Form 3877), per article listed (minimum 3)	0.44
Duplicate copy of PS Form 3817 or PS Form 3877 (per page)	1.15
Bulk Quantities	**Fee**
First 1,000 pieces (or fraction thereof)	$6.70
Each additional 1,000 pieces (or fraction thereof)	0.80
Duplicate copy of PS Form 3606	1.15

COD and Certified **NOT** for International Mail

International Business Reply Service (382)
Fee: Envelopes up to 2 ounces $1.50; Cards $1.00

International Postal Money Order (371)
NOT Available

International Reply Coupons (381) **Fee:** $2.20

Registered Mail (330) **Fee:** $11.75
Maximum Indemnity: $47.33
Available for First-Class Mail International, including postcards and Flat Rate Envelopes and Small Flat Rate Priced Boxes, and matter for the blind or other physically handicapped persons. Not applicable to M-bags.

Restricted Delivery (350) NOT Available

Return Receipt (340) **Fee:** $2.35
Available for registered mail and insured Priority Mail International parcels only.

Mozambique

Country Conditions for Mailing

Prohibitions (130)
Coins; banknotes; currency notes (paper money); traveler's checks; securities of any kind payable to bearer; platinum, gold, or silver, manufactured or not; precious stones; jewelry; and other valuable articles. However, coins for numismatic purposes are permitted.
Perishable infectious biological substances.
Radioactive materials.

Restrictions
No list furnished.

Observations
None

Customs Forms Required (123)
First-Class Mail International items and Priority Mail International Flat Rate Envelopes and Small Flat Rate Priced Boxes:
PS Form 2976 (see 123.61)
Priority Mail International parcels:
PS Form 2976-A inside 2976-E (envelope)

Global Express Guaranteed (210) Price Group 4

Refer to Notice 123, *Price List*, for the applicable retail, commercial base, or commercial plus price.
Weight Limit: 70 lbs.

Insurance (212.5)

Insured Amount not over	Fee	Insured Amount not over	Fee
$100	No Fee	For document reconstruction insurance or non-document insurance coverage above $800, add $1.00 per $100 or fraction thereof, up to a maximum of $2,499 per shipment.	
200	$1.00		
300	2.00		
400	3.00		
500	4.00		
600	5.00		
700	6.00		
800	7.00	$2,499 max.	$24.00

Value Limit (212.1)
The maximum value of a GXG shipment to this country is $2,499 or a lesser amount if limited by content or value.

Size Limits (211.22)
The surface area of the address side of the item to be mailed must be large enough to completely contain the Global Express Guaranteed Air Waybill/Shipping Invoice (shipping label), postage, endorsement, and any applicable markings. The shipping label is approximately 5.5 inches high and 9.5 inches long.
Maximum length: 46 inches
Maximum width: 35 inches
Maximum height: 46 inches
Maximum length and girth combined: 108 inches

General Conditions for Mailing
See Publication 141, *Global Express Guaranteed Service Guide,* for information about areas served in the destination country, allowable contents, packaging and labeling requirements, tracking and tracing, service standards, and other conditions for mailing.

Express Mail International (220) Price Group 7

Refer to Notice 123, *Price List*, for the applicable retail, commercial base, or commercial plus price.
Weight Limit: 66 lbs.

Express Mail International — Flat Rate Envelope and Flat Rate Boxes
The maximum weight for the Express Mail International Flat Rate Envelope and the Express Mail International Flat Rate Boxes is 20 pounds. Refer to Notice 123, *Price List*, for the applicable retail, commercial base, or commercial plus price.

Insurance (222.8)
Available for **Express Mail International merchandise shipments** only

Insured Amount not over	Fee	Insured Amount not over	Fee
$100	No Fee	For insurance coverage above $2,000, add $1.50 for each $500 or fraction thereof, up to a maximum of $5,000 per shipment.	
200	$0.85		
500	2.35		
1,000	3.85		
1,500	5.35		
2,000	6.85	$5,000 max.	$15.85

Articles Admitted	Required Customs Form/Endorsement
Correspondence, business papers, computer data, and advertising material.	PS Form 2976, *Customs — CN 22 and Sender's Declaration.* Endorse item clearly next to mailing label as BUSINESS PAPERS.
Merchandise samples without commercial value.	PS Form 2976, *Customs — CN 22 and Sender's Declaration.*
Merchandise and all articles subject to customs duty.	PS Form 2976-A, *Customs Declaration and Dispatch Note CP 72,* inside a PS Form 2976-E, *Customs Declaration Envelope CP 91.*

Size Limits (221.52)
Maximum length: 36 inches
Maximum length and girth combined: 79 inches

Note:
Coins; banknotes; currency notes, including paper money; securities of any kind payable to bearer; traveler's checks; platinum, gold, and silver; precious stones; jewelry; watches; and other valuable articles are prohibited in Express Mail International shipments to Mozambique.

Reciprocal Service Name: EMS Correio Express

Country Code: MZ

Areas Served:
Express Mail International is available ***only*** to the following locations:

Angoche	Lichinga	Nampula
Beira	Maputo	Pemba
Chimoio	Matola	Quelimane
Chokwe	Maxixe	Tete
Dondo	Monapo	Vilanculos
Inhambane	Nacala	Xai-Xai

Priority Mail International (230) Price Group 7

Refer to Notice 123, *Price List*, for the applicable retail, commercial base, or commercial plus price.
Weight Limit: 66 lbs.

Note: *Ordinary Priority Mail International includes indemnity at no cost based on weight. (See 230.)*

Priority Mail International — Flat Rate

Flat Rate Envelopes or Small Flat Rate Priced Boxes: The maximum weight is 4 pounds. Refer to Notice 123, *Price List*, for the applicable retail, commercial base, or commercial plus price.

Flat Rate Boxes — Medium and Large: The maximum weight is 20 pounds, or the limit set by the individual country, whichever is less. Refer to Notice 123, *Price List*, for the retail, commercial base, or commercial plus price.

Insurance (232.92) NOT Available

Size Limits (231.22)

Maximum length: 42 inches
Maximum length and girth combined: 79 inches

First-Class Mail International (240) Price Group 7

For the prices and maximum weights for letters, large envelopes (flats), packages (small packets), and postcards, see Notice 123, *Price List*.

Size Limits

Letters: See 241.212
Postcards: See 241.221
Large Envelopes (Flats): See 241.232
Packages (Small Packets): See 241.242 and 241.243

Airmail M-bags (260) — Direct Sack to One Addressee Price Group 7

Refer to Notice 123, *Price List*, for the applicable retail, commercial base, or commercial plus price.
Weight Limit: 66 lbs.

Matter for the Blind (270)

Free when sent as First-Class Mail International, including Priority Mail International Flat Rate Envelopes and Small Flat Rate Priced Boxes. Weight limit: 4 pounds.
Free when sent as Priority Mail International. Weight limit: 15 pounds.

Extra Services

Certificate of Mailing (313)

Individual Pieces	Fee
Individual article (PS Form 3817)	$1.15
Firm mailing books (PS Form 3877), per article listed (minimum 3)	0.44
Duplicate copy of PS Form 3817 or PS Form 3877 (per page)	1.15
Bulk Quantities	**Fee**
First 1,000 pieces (or fraction thereof)	$6.70
Each additional 1,000 pieces (or fraction thereof)	0.80
Duplicate copy of PS Form 3606	1.15

COD and Certified **NOT** for International Mail

International Business Reply Service (382)

Fee: Envelopes up to 2 ounces $1.50; Cards $1.00

International Postal Money Order (371)

NOT Available

International Reply Coupons (381) **Fee:** $2.20

Registered Mail (330) **Fee:** $11.75

Maximum Indemnity: $47.33
Available for First-Class Mail International, including postcards and Flat Rate Envelopes and Small Flat Rate Priced Boxes, and matter for the blind or other physically handicapped persons. Not applicable to M-bags.

Restricted Delivery (350) NOT Available

Return Receipt (340) **Fee:** $2.35

Available for registered mail only.

Namibia

Country Conditions for Mailing

Prohibitions (130)
Articles relating to lotteries.
Charged butane gas lighters and refills.
Cigarettes exceeding 2 kg per thosand in weight.
Diamonds or precious stones except in registered First-Class Mail International shipments.
Honey.
Prison-made articles.

Restrictions
None

Observations
1. Import licenses are required for many types of goods. Therefore, senders should ascertain from the addressee before mailing whether the necessary documents are held.
2. Licenses are not required for bona fide gifts not exceeding R 200 (Rand) in value.
3. The postal administration of Namibia does not deliver mail to street addresses. Therefore, all mailpieces sent to that country must be addressed to a private post office box. This condition of mailing applies to Express Mail International shipments, registered and unregistered letter packages, printed matter items, small packets, and insured and uninsured parcels that are sent to Namibia.

Customs Forms Required (123)
First-Class Mail International items and Priority Mail International Flat Rate Envelopes and Small Flat Rate Priced Boxes:
PS Form 2976 (see 123.61)
Priority Mail International parcels:
PS Form 2976-A inside 2976-E (envelope)

Global Express Guaranteed (210) Price Group 4

Refer to Notice 123, *Price List*, for the applicable retail, commercial base, or commercial plus price.
Weight Limit: 70 lbs.

Insurance (212.5)

Insured Amount not over	Fee	Insured Amount not over	Fee
$100	No Fee	For document reconstruction insurance or non-document insurance coverage above $800, add $1.00 per $100 or fraction thereof, up to a maximum of $2,499 per shipment.	
200	$1.00		
300	2.00		
400	3.00		
500	4.00		
600	5.00		
700	6.00		
800	7.00	$2,499 max.	$24.00

Value Limit (212.1)
The maximum value of a GXG shipment to this country is $2,499 or a lesser amount if limited by content or value.

Size Limits (211.22)
The surface area of the address side of the item to be mailed must be large enough to completely contain the Global Express Guaranteed Air Waybill/Shipping Invoice (shipping label), postage, endorsement, and any applicable markings. The shipping label is approximately 5.5 inches high and 9.5 inches long.
Maximum length: 46 inches
Maximum width: 35 inches
Maximum height: 46 inches
Maximum length and girth combined: 108 inches

General Conditions for Mailing
See Publication 141, *Global Express Guaranteed Service Guide,* for information about areas served in the destination country, allowable contents, packaging and labeling requirements, tracking and tracing, service standards, and other conditions for mailing.

Express Mail International (220) Price Group 7

Refer to Notice 123, *Price List*, for the applicable retail, commercial base, or commercial plus price.
Weight Limit: 22 lbs.

Express Mail International — Flat Rate Envelope and Flat Rate Boxes
The maximum weight for the Express Mail International Flat Rate Envelope and the Express Mail International Flat Rate Boxes is 20 pounds. Refer to Notice 123, *Price List*, for the applicable retail, commercial base, or commercial plus price.

Insurance (222.8)
Available for **Express Mail International merchandise shipments** only

Insured Amount not over	Fee	Insured Amount not over	Fee
$100	No Fee	For insurance coverage above $2,000, add $1.50 for each $500 or fraction thereof, up to a maximum of $5,000 per shipment.	
200	$0.85		
500	2.35		
1,000	3.85		
1,500	5.35		
2,000	6.85	$5,000 max.	$15.85

Articles Admitted	Required Customs Form/Endorsement
Correspondence and business papers.	PS Form 2976, *Customs — CN 22 and Sender's Declaration.* Endorse item clearly next to mailing label as BUSINESS PAPERS.
Merchandise samples without commercial value and not subject to customs duty.	PS Form 2976, *Customs — CN 22 and Sender's Declaration.*
Merchandise and all articles subject to customs duty.	PS Form 2976-A, *Customs Declaration and Dispatch Note CP 72,* inside a PS Form 2976-E, *Customs Declaration Envelope CP 91.* Include a commercial invoice in each item.

Size Limits (221.52)
Maximum length: 36 inches
Maximum length and girth combined: 79 inches

Note:
Coins; banknotes; currency notes, including paper money; securities of any kind payable to bearer; traveler's checks; platinum, gold, and silver; precious stones; jewelry; watches; and other valuable articles are prohibited in Express Mail International shipments to Namibia.

Reciprocal Service Name: EMS

Country Code: NA

Areas Served: All

Priority Mail International (230) Price Group 7

Refer to Notice 123, *Price List*, for the applicable retail, commercial base, or commercial plus price.
Weight Limit: 44 lbs.

Note: *Ordinary Priority Mail International includes indemnity at no cost based on weight. (See 230.)*

Priority Mail International — Flat Rate

Flat Rate Envelopes or Small Flat Rate Priced Boxes: The maximum weight is 4 pounds. Refer to Notice 123, *Price List*, for the applicable retail, commercial base, or commercial plus price.

Flat Rate Boxes — Medium and Large: The maximum weight is 20 pounds, or the limit set by the individual country, whichever is less. Refer to Notice 123, *Price List*, for the retail, commercial base, or commercial plus price.

Insurance (232.92)

Available for **Priority Mail International merchandise parcels** only (see 323.72 for markings)

Insured Amount not over	Fee	Insured Amount not over	Fee
$50	$2.45		
100	3.60	Add $1.15 for each additional $100 or fraction of insurance coverage.	
200	4.75		
300	5.90		
400	7.05		
500	8.20	$4,405 max.	$54.20

Size Limits (231.22)

Maximum length: 42 inches
Maximum length and girth combined: 79 inches

First-Class Mail International (240) Price Group 7

For the prices and maximum weights for letters, large envelopes (flats), packages (small packets), and postcards, see Notice 123, *Price List*.

Size Limits

Letters: See 241.212
Postcards: See 241.221
Large Envelopes (Flats): See 241.232
Packages (Small Packets): See 241.242 and 241.243

Airmail M-bags (260) — Direct Sack to One Addressee Price Group 7

Refer to Notice 123, *Price List*, for the applicable retail, commercial base, or commercial plus price.
Weight Limit: 66 lbs.

Matter for the Blind (270)

Free when sent as First-Class Mail International, including Priority Mail International Flat Rate Envelopes and Small Flat Rate Priced Boxes. Weight limit: 4 pounds.
Free when sent as Priority Mail International. Weight limit: 15 pounds.

Extra Services

Certificate of Mailing (313)

Individual Pieces	Fee
Individual article (PS Form 3817)	$1.15
Firm mailing books (PS Form 3877), per article listed (minimum 3)	0.44
Duplicate copy of PS Form 3817 or PS Form 3877 (per page)	1.15
Bulk Quantities	**Fee**
First 1,000 pieces (or fraction thereof)	$6.70
Each additional 1,000 pieces (or fraction thereof)	0.80
Duplicate copy of PS Form 3606	1.15

COD and Certified

NOT for International Mail

International Business Reply Service (382)

Fee: Envelopes up to 2 ounces $1.50; Cards $1.00

International Postal Money Order (371)

NOT Available

International Reply Coupons (381)

Fee: $2.20

Registered Mail (330)

Fee: $11.75

Maximum Indemnity: $47.33
Available for First-Class Mail International, including postcards and Flat Rate Envelopes and Small Flat Rate Priced Boxes, and matter for the blind or other physically handicapped persons. Not applicable to M-bags.

Restricted Delivery (350)

NOT Available

Return Receipt (340)

Fee: $2.35

Available for registered mail and insured Priority Mail International parcels only.

Nauru

Country Conditions for Mailing

Prohibitions (130)
Radioactive materials.

Restrictions
No list furnished.

Observations
None

Customs Forms Required (123)
First-Class Mail International items and Priority Mail International Flat Rate Envelopes and Small Flat Rate Priced Boxes:
PS Form 2976 (see 123.61)
Priority Mail International parcels:
PS Form 2976-A inside 2976-E (envelope)

Global Express Guaranteed (210)

Not Available

Express Mail International (220) Price Group 6

Refer to Notice 123, *Price List*, for the applicable retail, commercial base, or commercial plus price.
Weight Limit: 44 lbs.

Express Mail International — Flat Rate Envelope and Flat Rate Boxes

The maximum weight for the Express Mail International Flat Rate Envelope and the Express Mail International Flat Rate Boxes is 20 pounds. Refer to Notice 123, *Price List*, for the applicable retail, commercial base, or commercial plus price.

Insurance (222.8)
Available for **Express Mail International merchandise shipments** only

Insured Amount not over	Fee	Insured Amount not over	Fee
$100	No Fee	For insurance coverage above $2,000, add $1.50 for each $500 or fraction thereof, up to a maximum of $5,000 per shipment.	
200	$0.85		
500	2.35		
1,000	3.85		
1,500	5.35		
2,000	6.85	$5,000 max.	$15.85

Articles Admitted	Required Customs Form/Endorsement
Correspondence and business papers.	PS Form 2976, *Customs — CN 22 and Sender's Declaration.* Endorse item clearly next to mailing label as BUSINESS PAPERS.
Merchandise samples without commercial value and not subject to customs duty.	PS Form 2976, *Customs — CN 22 and Sender's Declaration.*
Merchandise and all articles subject to customs duty.	PS Form 2976-A, *Customs Declaration and Dispatch Note CP 72,* inside a PS Form 2976-E, *Customs Declaration Envelope CP 91.* Include a commercial invoice in each item.

Size Limits (221.52)
Maximum length: 36 inches
Maximum length and girth combined: 79 inches

Note:
Coins; banknotes; currency notes, including paper money; securities of any kind payable to bearer; traveler's checks; platinum, gold, and silver; precious stones; jewelry; watches; and other valuable articles are prohibited in Express Mail International shipments to Nauru. All items prohibited in regular international mail are also prohibited in Express Mail International to Nauru.

Reciprocal Service Name: EMS

Country Code: NR

Areas Served: All

Priority Mail International (230) Price Group 6

Refer to Notice 123, *Price List*, for the applicable retail, commercial base, or commercial plus price.
Weight Limit: 44 lbs.

Note: *Ordinary Priority Mail International includes indemnity at no cost based on weight. (See 230.)*

Priority Mail International — Flat Rate
Flat Rate Envelopes or Small Flat Rate Priced Boxes: The maximum weight is 4 pounds. Refer to Notice 123, *Price List*, for the applicable retail, commercial base, or commercial plus price.

Flat Rate Boxes — Medium and Large: The maximum weight is 20 pounds, or the limit set by the individual country, whichever is less. Refer to Notice 123, *Price List*, for the retail, commercial base, or commercial plus price.

Insurance (232.92)
Available for **Priority Mail International merchandise parcels** only (see 323.72 for markings)

Insured Amount not over	Fee
$50	$2.45
100	3.60
200	4.75
220 max.	5.90

Size Limits (231.22)
Maximum length: 42 inches
Maximum length and girth combined: 79 inches

First-Class Mail International (240) Price Group 6
For the prices and maximum weights for letters, large envelopes (flats), packages (small packets), and postcards, see Notice 123, *Price List*.

Size Limits
Letters: See 241.212
Postcards: See 241.221
Large Envelopes (Flats): See 241.232
Packages (Small Packets): See 241.242 and 241.243

Airmail M-bags (260) — Direct Sack to One Addressee

Price Group 6

Refer to Notice 123, *Price List*, for the applicable retail, commercial base, or commercial plus price.
Weight Limit: 66 lbs.

Matter for the Blind (270)

Free when sent as First-Class Mail International, including Priority Mail International Flat Rate Envelopes and Small Flat Rate Priced Boxes. Weight limit: 4 pounds.

Free when sent as Priority Mail International. Weight limit: 15 pounds.

Extra Services

Certificate of Mailing (313)

Individual Pieces	**Fee**
Individual article (PS Form 3817)	$1.15
Firm mailing books (PS Form 3877), per article listed (minimum 3)	0.44
Duplicate copy of PS Form 3817 or PS Form 3877 (per page)	1.15
Bulk Quantities	**Fee**
First 1,000 pieces (or fraction thereof)	$6.70
Each additional 1,000 pieces (or fraction thereof)	0.80
Duplicate copy of PS Form 3606	1.15

COD and Certified

NOT for International Mail

International Business Reply Service (382)

Fee: Envelopes up to 2 ounces $1.50; Cards $1.00

International Postal Money Order (371)

NOT Available

International Reply Coupons (381)

Fee: $2.20

Registered Mail (330)

Fee: $11.75

Maximum Indemnity: $47.33

Available for First-Class Mail International, including postcards and Flat Rate Envelopes and Small Flat Rate Priced Boxes, and matter for the blind or other physically handicapped persons. Not applicable to M-bags.

Restricted Delivery (350)

NOT Available

Return Receipt (340)

Fee: $2.35

Available for registered mail and insured Priority Mail International parcels only.

Nepal

Country Conditions for Mailing

Prohibitions (130)
Bearings of all kinds.
Cameras.
Cardamon.
Cinnamon.
Cloves.
Coins, banknotes; currency notes (paper money); securities of any kind payable to bearer; traveler's checks; platinum, gold, and silver (manufactured or not); precious stones; jewelry; and other valuable articles.
Perishable infectious biological substances.
Photographic paper.
Radioactive materials.
Synthetic fibres (75 denier or less).
Watches and spare parts.

Restrictions
No list furnished.

Observations
First-Class Mail International items, including the Priority Mail International Flat Rate Envelope, may not contain dutiable articles.

Customs Forms Required (123)
First-Class Mail International items and Priority Mail International Flat Rate Envelopes and Small Flat Rate Priced Boxes:
PS Form 2976 (see 123.61)
Priority Mail International parcels:
PS Form 2976-A inside 2976-E (envelope)

Global Express Guaranteed (210) Price Group 6

Refer to Notice 123, *Price List*, for the applicable retail, commercial base, or commercial plus price.
Weight Limit: 70 lbs.

Insurance (212.5)

Insured Amount not over	Fee	Insured Amount not over	Fee
$100	No Fee	For document reconstruction insurance or non-document insurance coverage above $800, add $1.00 per $100 or fraction thereof, up to a maximum of $2,499 per shipment.	
200	$1.00		
300	2.00		
400	3.00		
500	4.00		
600	5.00		
700	6.00		
800	7.00	$2,499 max.	$24.00

Value Limit (212.1)
The maximum value of a GXG shipment to this country is $2,499 or a lesser amount if limited by content or value.

Size Limits (211.22)
The surface area of the address side of the item to be mailed must be large enough to completely contain the Global Express Guaranteed Air Waybill/Shipping Invoice (shipping label), postage, endorsement, and any applicable markings. The shipping label is approximately 5.5 inches high and 9.5 inches long.
Maximum length: 46 inches
Maximum width: 35 inches
Maximum height: 46 inches
Maximum length and girth combined: 108 inches

General Conditions for Mailing
See Publication 141, *Global Express Guaranteed Service Guide,* for information about areas served in the destination country, allowable contents, packaging and labeling requirements, tracking and tracing, service standards, and other conditions for mailing.

Express Mail International (220) Price Group 6

Refer to Notice 123, *Price List*, for the applicable retail, commercial base, or commercial plus price.
Weight Limit: 69 lbs.

Express Mail International — Flat Rate Envelope and Flat Rate Boxes
The maximum weight for the Express Mail International Flat Rate Envelope and the Express Mail International Flat Rate Boxes is 20 pounds. Refer to Notice 123, *Price List*, for the applicable retail, commercial base, or commercial plus price.

Insurance (222.8)
Available for **Express Mail International merchandise shipments** only

Insured Amount not over	Fee	Insured Amount not over	Fee
$100	No Fee	For insurance coverage above $2,000, add $1.50 for each $500 or fraction thereof, up to a maximum of $5,000 per shipment.	
200	$0.85		
500	2.35		
1,000	3.85		
1,500	5.35		
2,000	6.85	$5,000 max.	$15.85

Articles Admitted	Required Customs Form/Endorsement
Business correspondence and commercial papers/ documents.	PS Form 2976, *Customs — CN 22 and Sender's Declaration.* Next to mailing label, clearly endorse item as BUSINESS PAPERS.
Merchandise samples without commercial value and not subject to customs duty.	PS Form 2976, *Customs — CN 22 and Sender's Declaration.*
Merchandise samples, gifts, computer data including computer cards, magnetic tape, microfilm, and microfiche.	PS Form 2976-A, *Customs Declaration and Dispatch Note CP 72,* inside a PS Form 2976-E, *Customs Declaration Envelope CP 91.*
Merchandise and all articles subject to customs duty. Include a commercial invoice in each item.	PS Form 2976-A, *Customs Declaration and Dispatch Note CP 72,* inside a PS Form 2976-E, *Customs Declaration Envelope CP 91.* A commercial invoice must be attached to the outside of all commercial shipments.

Size Limits (221.52)
Maximum length: 36 inches
Maximum length and girth combined: 79 inches

Notes:
1. Items are delivered Monday through Friday and Sunday. There is no delivery on Saturday or on national holidays.
2. Postal employees must tell customers that there is no service guarantee on any Express Mail International item.

3. All items admissible in international mail to Nepal, including correspondence, business papers, and merchandise, are accepted in Express Mail International. See Prohibitions and Restrictions.
4. Coins; banknotes; currency notes, including paper money; securities of any kind payable to bearer; traveler's checks; platinum, gold, and silver; precious stones; jewelry; watches; and other valuable articles are prohibited in Express Mail International shipments to Nepal. All items prohibited in regular international mail are also prohibited in Express Mail International to Nepal.

Reciprocal Service Name: EMS

Country Code: NP

Areas Served: Katmandu, Lalitpur

Priority Mail International (230) Price Group 6

Refer to Notice 123, *Price List*, for the applicable retail, commercial base, or commercial plus price.
Weight Limit: 44 lbs.

Note: *Ordinary Priority Mail International includes indemnity at no cost based on weight. (See 230.)*

Priority Mail International — Flat Rate

Flat Rate Envelopes or Small Flat Rate Priced Boxes: The maximum weight is 4 pounds. Refer to Notice 123, *Price List*, for the applicable retail, commercial base, or commercial plus price.

Flat Rate Boxes — Medium and Large: The maximum weight is 20 pounds, or the limit set by the individual country, whichever is less. Refer to Notice 123, *Price List*, for the retail, commercial base, or commercial plus price.

Insurance (232.92) NOT Available

Size Limits (231.22)

Maximum length: 42 inches
Maximum length and girth combined: 79 inches

First-Class Mail International (240) Price Group 6

For the prices and maximum weights for letters, large envelopes (flats), packages (small packets), and postcards, see Notice 123, *Price List*.

Size Limits

Letters: See 241.212
Postcards: See 241.221
Large Envelopes (Flats): See 241.232
Packages (Small Packets): See 241.242 and 241.243

Airmail M-bags (260) — Direct Sack to One Addressee Price Group 6

Refer to Notice 123, *Price List*, for the applicable retail, commercial base, or commercial plus price.
Weight Limit: 66 lbs.

Matter for the Blind (270)

Free when sent as First-Class Mail International, including Priority Mail International Flat Rate Envelopes and Small Flat Rate Priced Boxes. Weight limit: 4 pounds.
Free when sent as Priority Mail International. Weight limit: 15 pounds.

Extra Services

Certificate of Mailing (313)

Individual Pieces	Fee
Individual article (PS Form 3817)	$1.15
Firm mailing books (PS Form 3877), per article listed (minimum 3)	0.44
Duplicate copy of PS Form 3817 or PS Form 3877 (per page)	1.15
Bulk Quantities	**Fee**
First 1,000 pieces (or fraction thereof)	$6.70
Each additional 1,000 pieces (or fraction thereof)	0.80
Duplicate copy of PS Form 3606	1.15

COD and Certified **NOT** for International Mail

International Business Reply Service (382)

Fee: Envelopes up to 2 ounces $1.50; Cards $1.00

International Postal Money Order (371)

NOT Available

International Reply Coupons (381) **Fee:** $2.20

Registered Mail (330) **Fee:** $11.75

Maximum Indemnity: $47.33
Available for First-Class Mail International, including postcards and Flat Rate Envelopes and Small Flat Rate Priced Boxes, and matter for the blind or other physically handicapped persons. Not applicable to M-bags.

Restricted Delivery (350) NOT Available

Return Receipt (340) **Fee:** $2.35

Available for registered mail only.

Netherlands

Country Conditions for Mailing

Prohibitions (130)
Arms and weapons.
Firearms and parts thereof, except under permit.
Human remains.
Live plants and animals.
Radioactive materials.
Tickets and publicity for lotteries.

Restrictions
Articles sent for commercial purposes will not be admitted unless the addressee has obtained an import permit issued by the Centrale Dienst voor Inen Uitvoer, van Stolkweg 14, Gravenhage, and where necessary, a currency permit issued by the Nederlandsche Bank at Amsterdam.
Authorization from the Nederlandsche Bank is required to be obtained by the addressee for the importation of current instruments of payment; securities; acknowledgments of debt; and shares of stock.
Cigarettes or tobacco products will be admitted only if they are sent from one private individual to another without any compensation or payment and if the package contains no more than 800 cigarettes, 400 cigars, or 1 kilogram (approximately 2.2 lbs.) of shag or cigarette tobacco.
Meat or meat products (including poultry and wild game) and milk or milk products cannot exceed 1 kilogram (approximately 2.2 lbs.), and any such products must be accompanied by a veterinary certificate issued by the responsible official authority from the country of origin.

Observations
1. A parcel may be addressed to a street address or to a post office box. A local telephone number for the addressee should be provided when the item is addressed to a street address and must be provided when the item is addressed to a post office box.
2. For parcels, an invoice, in duplicate, is required for all commercial shipments regardless of value and all personal shipments valued at $300 or more. The invoices must be affixed to the outside of the parcel or may be enclosed in PS Form 2976-E with the customs declaration.

Customs Forms Required (123)
First-Class Mail International items and Priority Mail International Flat Rate Envelopes and Small Flat Rate Priced Boxes:
PS Form 2976 (see 123.61)
Priority Mail International parcels:
PS Form 2976-A inside 2976-E (envelope)

Global Express Guaranteed (210) Price Group 3

Refer to Notice 123, *Price List*, for the applicable retail, commercial base, or commercial plus price.
Weight Limit: 70 lbs.

Insurance (212.5)

Insured Amount not over	Fee	Insured Amount not over	Fee
$100	No Fee	For document reconstruction insurance or non-document insurance coverage above $800, add $1.00 per $100 or fraction thereof, up to a maximum of $2,499 per shipment.	
200	$1.00		
300	2.00		
400	3.00		
500	4.00		
600	5.00		
700	6.00		
800	7.00	$2,499 max.	$24.00

Value Limit (212.1)
The maximum value of a GXG shipment to this country is $2,499 or a lesser amount if limited by content or value.

Size Limits (211.22)
The surface area of the address side of the item to be mailed must be large enough to completely contain the Global Express Guaranteed Air Waybill/Shipping Invoice (shipping label), postage, endorsement, and any applicable markings. The shipping label is approximately 5.5 inches high and 9.5 inches long.
Maximum length: 46 inches
Maximum width: 35 inches
Maximum height: 46 inches
Maximum length and girth combined: 108 inches

General Conditions for Mailing
See Publication 141, *Global Express Guaranteed Service Guide,* for information about areas served in the destination country, allowable contents, packaging and labeling requirements, tracking and tracing, service standards, and other conditions for mailing.

Express Mail International (220) Price Group 17

Refer to Notice 123, *Price List*, for the applicable retail, commercial base, or commercial plus price.
Weight Limit: 66 lbs.

Express Mail International — Flat Rate Envelope and Flat Rate Boxes
The maximum weight for the Express Mail International Flat Rate Envelope and the Express Mail International Flat Rate Boxes is 20 pounds. Refer to Notice 123, *Price List*, for the applicable retail, commercial base, or commercial plus price.

Insurance (222.8)
Available for **Express Mail International merchandise shipments** only

Insured Amount not over	Fee
$100	No Fee
200	$0.85
500	2.35
650 max.	3.85

Articles Admitted	Required Customs Form/Endorsement
Business correspondence and commercial papers/documents.	No form required. Endorse item clearly next to mailing label as BUSINESS PAPERS.
Merchandise samples without commercial value.	PS Form 2976, *Customs — CN 22 and Sender's Declaration.*
Merchandise and all articles subject to customs duty.	PS Form 2976-A, *Customs Declaration and Dispatch Note CP 72,* inside a PS Form 2976-E, *Customs Declaration Envelope CP 91.* An invoice, in duplicate, is required for all commercial shipments regardless of value and all personal shipments valued at $300 or more. The invoices must be either affixed to the outside of the parcel or enclosed in PS Form 2976-E with the customs declaration.

Size Limits (221.52)
Maximum length: 60 inches
Maximum length and girth combined: 108 inches

Notes:
1. An invoice, in duplicate, is required for all commercial shipments regardless of value and for all personal shipments valued at $300 or more. The invoices must be either affixed to the outside of the parcel or enclosed in PS Form 2976-E with the customs declaration.
2. Arms, weapons, and human remains are prohibited.
3. Coins; banknotes; currency notes, including paper money; securities of any kind payable to bearer; traveler's checks; platinum, gold, and silver; precious stones; jewelry; watches; and other valuable articles are prohibited in Express Mail International shipments to the Netherlands.
4. An Express Mail International shipment may be addressed to a street address or to a post office box. A local telephone number for the addressee should be provided when the item is addressed to a street address and must be provided when the item is addressed to a post office box.

Reciprocal Service Name: There is no reciprocal service.

Country Code: NL

Areas Served: All

Priority Mail International (230) Price Group 17

Refer to Notice 123, *Price List*, for the applicable retail, commercial base, or commercial plus price.
Weight Limit: 44 lbs.

Note: *Ordinary Priority Mail International includes indemnity at no cost based on weight. (See 230.)*

Priority Mail International — Flat Rate
Flat Rate Envelopes or Small Flat Rate Priced Boxes: The maximum weight is 4 pounds. Refer to Notice 123, *Price List*, for the applicable retail, commercial base, or commercial plus price.

Flat Rate Boxes — Medium and Large: The maximum weight is 20 pounds, or the limit set by the individual country, whichever is less. Refer to Notice 123, *Price List*, for the retail, commercial base, or commercial plus price.

Insurance (232.92)
Available for **Priority Mail International merchandise parcels** only (see 323.72 for markings)

Insured Amount not over	Fee
$50	$2.45
100	3.60
200	4.75
300	5.90
400	7.05
500	8.20
600	9.35
650 max.	10.50

Size Limits (231.22)
Maximum length: 60 inches
Maximum length and girth combined: 108 inches

First-Class Mail International (240) Price Group 5
For the prices and maximum weights for letters, large envelopes (flats), packages (small packets), and postcards, see Notice 123, *Price List*.

Size Limits
Letters: See 241.212
Postcards: See 241.221
Large Envelopes (Flats): See 241.232
Packages (Small Packets): See 241.242 and 241.243

Airmail M-bags (260) — Direct Sack to One Addressee Price Group 5

Refer to Notice 123, *Price List*, for the applicable retail, commercial base, or commercial plus price.
Weight Limit: 66 lbs.

Matter for the Blind (270)
Free when sent as First-Class Mail International, including Priority Mail International Flat Rate Envelopes and Small Flat Rate Priced Boxes. Weight limit: 4 pounds.
Free when sent as Priority Mail International. Weight limit: 15 pounds.

Extra Services

Certificate of Mailing (313)

Individual Pieces	Fee
Individual article (PS Form 3817)	$1.15
Firm mailing books (PS Form 3877), per article listed (minimum 3)	0.44
Duplicate copy of PS Form 3817 or PS Form 3877 (per page)	1.15
Bulk Quantities	**Fee**
First 1,000 pieces (or fraction thereof)	$6.70
Each additional 1,000 pieces (or fraction thereof)	0.80
Duplicate copy of PS Form 3606	1.15

COD and Certified

NOT for International Mail

International Business Reply Service (382)

Fee: Envelopes up to 2 ounces $1.50; Cards $1.00

International Postal Money Order (371)

NOT Available

International Reply Coupons (381)

Fee: $2.20

Registered Mail (330)

Fee: $11.75

Maximum Indemnity: $47.33
Available for First-Class Mail International, including postcards and Flat Rate Envelopes and Small Flat Rate Priced Boxes, and matter for the blind or other physically handicapped persons. Not applicable to M-bags.

Restricted Delivery (350)

NOT Available

Return Receipt (340)

Fee: $2.35

Available for registered mail and insured Priority Mail International parcels only.

Netherlands Antilles
(Includes Bonaire, Curacao, Saba, Saint Eustatius, and Saint Maarten)

Country Conditions for Mailing

Prohibitions (130)
Coins; banknotes; currency; securities of any kind payable to bearer; traveler's checks; platinum, gold, and silver (manufactured or not); precious stones; jewelry; and other valuable articles, **unless they are sent in registered First-Class Mail International.**
Copper, bronze, or nickel coins.
Perishable infectious biological substances.
Perishable noninfectious biological substances.
Radioactive materials.

Restrictions
Importation of arms requires special permission.

Observations
None

Customs Forms Required (123)
First-Class Mail International items and Priority Mail International Flat Rate Envelopes and Small Flat Rate Priced Boxes:
PS Form 2976 (see 123.61)
Priority Mail International parcels:
PS Form 2976-A inside 2976-E (envelope)

Global Express Guaranteed (210) Price Group 7

Refer to Notice 123, *Price List*, for the applicable retail, commercial base, or commercial plus price.
Weight Limit: 70 lbs.

Insurance (212.5)

Insured Amount not over	Fee	Insured Amount not over	Fee
$100	No Fee	For document reconstruction insurance or non-document insurance coverage above $800, add $1.00 per $100 or fraction thereof, up to a maximum of $2,499 per shipment.	
200	$1.00		
300	2.00		
400	3.00		
500	4.00		
600	5.00		
700	6.00		
800	7.00	$2,499 max.	$24.00

Value Limit (212.1)
The maximum value of a GXG shipment to this country is $2,499 or a lesser amount if limited by content or value.

Size Limits (211.22)
The surface area of the address side of the item to be mailed must be large enough to completely contain the Global Express Guaranteed Air Waybill/Shipping Invoice (shipping label), postage, endorsement, and any applicable markings. The shipping label is approximately 5.5 inches high and 9.5 inches long.
Maximum length: 46 inches
Maximum width: 35 inches
Maximum height: 46 inches
Maximum length and girth combined: 108 inches

General Conditions for Mailing
See Publication 141, *Global Express Guaranteed Service Guide,* for information about areas served in the destination country, allowable contents, packaging and labeling requirements, tracking and tracing, service standards, and other conditions for mailing.

Express Mail International (220) Price Group 9

Refer to Notice 123, *Price List*, for the applicable retail, commercial base, or commercial plus price.
Weight Limit: 66 lbs.

Express Mail International — Flat Rate Envelope and Flat Rate Boxes
The maximum weight for the Express Mail International Flat Rate Envelope and the Express Mail International Flat Rate Boxes is 20 pounds. Refer to Notice 123, *Price List*, for the applicable retail, commercial base, or commercial plus price.

Insurance (222.8)
Available for **Express Mail International merchandise shipments** only

Insured Amount not over	Fee	Insured Amount not over	Fee
$100	No Fee	For insurance coverage above $2,000, add $1.50 for each $500 or fraction thereof, up to a maximum of $5,000 per shipment.	
200	$0.85		
500	2.35		
1,000	3.85		
1,500	5.35		
2,000	6.85	$5,000 max.	$15.85

Articles Admitted	Required Customs Form/Endorsement
Correspondence, business papers, and documents.	No form required. Endorse item clearly next to mailing label as BUSINESS PAPERS.
Merchandise samples and merchandise with a value up to 300 SDRs (approximately $390).	PS Form 2976, *Customs — CN 22 and Sender's Declaration.*
Merchandise and all articles with a value above 300 SDRs (approximately $390).	PS Form 2976-A, *Customs Declaration and Dispatch Note CP 72,* inside a PS Form 2976-E, *Customs Declaration Envelope CP 91.*

Size Limits (221.52)
Maximum length: 36 inches
Maximum length and girth combined: 79 inches

Note:
Coins; banknotes; currency notes, including paper money; securities of any kind payable to bearer; traveler's checks; platinum, gold, and silver; precious stones; jewelry; watches; and other valuable articles are prohibited in Express Mail International shipments to the Netherlands Antilles.

Reciprocal Service Name: Express Mail Service

Country Code: AN

Areas Served:
Bonaire, Curacao, Saba, Saint Eustatius, and the Netherlands Antilles side of Saint Maarten

Note: Express Mail International service is available to Aruba. See the Aruba individual country listing for conditions of mailing.

Priority Mail International (230) Price Group 9

Refer to Notice 123, *Price List*, for the applicable retail, commercial base, or commercial plus price.
Weight Limit: 44 lbs.

Note: *Ordinary Priority Mail International includes indemnity at no cost based on weight. (See 230.)*

Priority Mail International — Flat Rate
Flat Rate Envelopes or Small Flat Rate Priced Boxes: The maximum weight is 4 pounds. Refer to Notice 123, *Price List*, for the applicable retail, commercial base, or commercial plus price.

Flat Rate Boxes — Medium and Large: The maximum weight is 20 pounds, or the limit set by the individual country, whichever is less. Refer to Notice 123, *Price List*, for the retail, commercial base, or commercial plus price.

Insurance (232.92)
Available for **Priority Mail International merchandise parcels** only (see 323.72 for markings)

Insured Amount not over	Fee	Insured Amount not over	Fee
$50	$2.45		
100	3.60	Add $1.15 for each additional $100 or fraction of insurance coverage.	
200	4.75		
300	5.90		
400	7.05		
500	8.20	$5,000 max.	$59.95

Size Limits (231.22)
Maximum length: 42 inches
Maximum length and girth combined: 79 inches

First-Class Mail International (240) Price Group 9
For the prices and maximum weights for letters, large envelopes (flats), packages (small packets), and postcards, see Notice 123, *Price List*.

Size Limits
Letters: See 241.212
Postcards: See 241.221
Large Envelopes (Flats): See 241.232
Packages (Small Packets): See 241.242 and 241.243

Airmail M-bags (260) — Direct Sack to One Addressee Price Group 9

Refer to Notice 123, *Price List*, for the applicable retail, commercial base, or commercial plus price.
Weight Limit: 66 lbs.

Matter for the Blind (270)
Free when sent as First-Class Mail International, including Priority Mail International Flat Rate Envelopes and Small Flat Rate Priced Boxes. Weight limit: 4 pounds.
Free when sent as Priority Mail International. Weight limit: 15 pounds.

Extra Services

Certificate of Mailing (313)

Individual Pieces	Fee
Individual article (PS Form 3817)	$1.15
Firm mailing books (PS Form 3877), per article listed (minimum 3)	0.44
Duplicate copy of PS Form 3817 or PS Form 3877 (per page)	1.15
Bulk Quantities	**Fee**
First 1,000 pieces (or fraction thereof)	$6.70
Each additional 1,000 pieces (or fraction thereof)	0.80
Duplicate copy of PS Form 3606	1.15

COD and Certified **NOT** for International Mail

International Business Reply Service (382)
Fee: Envelopes up to 2 ounces $1.50; Cards $1.00

International Postal Money Order (371)
NOT Available

International Reply Coupons (381) **Fee:** $2.20

Registered Mail (330) **Fee:** $11.75
Maximum Indemnity: $47.33
Available for First-Class Mail International, including postcards and Flat Rate Envelopes and Small Flat Rate Priced Boxes, and matter for the blind or other physically handicapped persons. Not applicable to M-bags.

Restricted Delivery (350) NOT Available

Return Receipt (340) **Fee:** $2.35
Available for registered mail and insured Priority Mail International parcels only.

New Caledonia

Country Conditions for Mailing

Prohibitions (130)
Perishable infectious biological substances.
Radioactive materials.
Tobacco leaves or manufactured tobacco.
Weights and measures not of the decimal system.

Restrictions
No list furnished.

Observations
1. Import permits and import certificates are required for some types of goods. Therefore, senders should ascertain before mailing whether the necessary documents are held.
2. Import permits are not required for items valued less than 2000 f CFP.
3. Certificates of origin and accompanying documents should be sent to the consignees by First-Class Mail International; they should not be enclosed in Priority Mail International.

Customs Forms Required (123)
First-Class Mail International items and Priority Mail International Flat Rate Envelopes and Small Flat Rate Priced Boxes:
PS Form 2976 (see 123.61)
Priority Mail International parcels:
PS Form 2976-A inside 2976-E (envelope)

Global Express Guaranteed (210) Price Group 8

Refer to Notice 123, *Price List*, for the applicable retail, commercial base, or commercial plus price.
Weight Limit: 70 lbs.

Insurance (212.5)

Insured Amount not over	Fee	Insured Amount not over	Fee
$100	No Fee	For document reconstruction insurance or non-document insurance coverage above $800, add $1.00 per $100 or fraction thereof, up to a maximum of $2,499 per shipment.	
200	$1.00		
300	2.00		
400	3.00		
500	4.00		
600	5.00		
700	6.00		
800	7.00	$2,499 max.	$24.00

Value Limit (212.1)
The maximum value of a GXG shipment to this country is $2,499 or a lesser amount if limited by content or value.

Size Limits (211.22)
The surface area of the address side of the item to be mailed must be large enough to completely contain the Global Express Guaranteed Air Waybill/Shipping Invoice (shipping label), postage, endorsement, and any applicable markings. The shipping label is approximately 5.5 inches high and 9.5 inches long.
Maximum length: 46 inches
Maximum width: 35 inches
Maximum height: 46 inches
Maximum length and girth combined: 108 inches

General Conditions for Mailing
See Publication 141, *Global Express Guaranteed Service Guide,* for information about areas served in the destination country, allowable contents, packaging and labeling requirements, tracking and tracing, service standards, and other conditions for mailing.

Express Mail International (220) Price Group 6

Refer to Notice 123, *Price List*, for the applicable retail, commercial base, or commercial plus price.
Weight Limit: 66 lbs.

Express Mail International — Flat Rate Envelope and Flat Rate Boxes
The maximum weight for the Express Mail International Flat Rate Envelope and the Express Mail International Flat Rate Boxes is 20 pounds. Refer to Notice 123, *Price List*, for the applicable retail, commercial base, or commercial plus price.

Insurance (222.8)
Available for **Express Mail International merchandise shipments** only

Insured Amount not over	Fee	Insured Amount not over	Fee
$100	No Fee	For insurance coverage above $2,000, add $1.50 for each $500 or fraction thereof, up to a maximum of $5,000 per shipment.	
200	$0.85		
500	2.35		
1,000	3.85		
1,500	5.35		
2,000	6.85	$5,000 max.	$15.85

Articles Admitted	Required Customs Form/Endorsement
Correspondence and business papers.	PS Form 2976, *Customs — CN 22 and Sender's Declaration.* Endorse item clearly next to mailing label as BUSINESS PAPERS.
Merchandise samples without commercial value and not subject to customs duty.	PS Form 2976, *Customs — CN 22 and Sender's Declaration.* Gifts and samples must be endorsed NOT FOR SALE.
Merchandise and all articles subject to customs duty.	PS Form 2976-A, *Customs Declaration and Dispatch Note CP 72,* inside a PS Form 2976-E, *Customs Declaration Envelope CP 91.* Two copies of a commercial invoice must be included in the item, and should include the sender's name, address, and telephone number.

Size Limits (221.52)
Maximum length: 36 inches
Maximum length and girth combined: 79 inches

Note:
Coins; banknotes; currency notes, including paper money; securities of any kind payable to bearer; traveler's checks; platinum, gold, and silver; precious stones; jewelry; watches; and other valuable articles are prohibited in Express Mail International shipments to New Caledonia.

Reciprocal Service Name: EMS Chronopost

Country Code: NC

Areas Served: All

Priority Mail International (230) Price Group 6

Refer to Notice 123, *Price List*, for the applicable retail, commercial base, or commercial plus price.
Weight Limit: 66 lbs.

Note: *Ordinary Priority Mail International includes indemnity at no cost based on weight. (See 230.)*

Priority Mail International — Flat Rate

Flat Rate Envelopes or Small Flat Rate Priced Boxes: The maximum weight is 4 pounds. Refer to Notice 123, *Price List*, for the applicable retail, commercial base, or commercial plus price.

Flat Rate Boxes — Medium and Large: The maximum weight is 20 pounds, or the limit set by the individual country, whichever is less. Refer to Notice 123, *Price List*, for the retail, commercial base, or commercial plus price.

Insurance (232.92)

Available for **Priority Mail International merchandise parcels** only (see 323.72 for markings)

Insured Amount not over	Fee	Insured Amount not over	Fee
$50	$2.45		
100	3.60	Add $1.15 for each additional $100 or fraction of insurance coverage.	
200	4.75		
300	5.90		
400	7.05		
500	8.20	$1,775 max.	$23.15

Size Limits (231.22)

Maximum length: 42 inches
Maximum length and girth combined: 79 inches

First-Class Mail International (240) Price Group 6

For the prices and maximum weights for letters, large envelopes (flats), packages (small packets), and postcards, see Notice 123, *Price List*.

Size Limits

Letters: See 241.212
Postcards: See 241.221
Large Envelopes (Flats): See 241.232
Packages (Small Packets): See 241.242 and 241.243

Airmail M-bags (260) — Direct Sack to One Addressee Price Group 6

Refer to Notice 123, *Price List*, for the applicable retail, commercial base, or commercial plus price.
Weight Limit: 66 lbs.

Matter for the Blind (270)

Free when sent as First-Class Mail International, including Priority Mail International Flat Rate Envelopes and Small Flat Rate Priced Boxes. Weight limit: 4 pounds.
Free when sent as Priority Mail International. Weight limit: 15 pounds.

Extra Services

Certificate of Mailing (313)

Individual Pieces	Fee
Individual article (PS Form 3817)	$1.15
Firm mailing books (PS Form 3877), per article listed (minimum 3)	0.44
Duplicate copy of PS Form 3817 or PS Form 3877 (per page)	1.15
Bulk Quantities	**Fee**
First 1,000 pieces (or fraction thereof)	$6.70
Each additional 1,000 pieces (or fraction thereof)	0.80
Duplicate copy of PS Form 3606	1.15

COD and Certified

NOT for International Mail

International Business Reply Service (382)

Fee: Envelopes up to 2 ounces $1.50; Cards $1.00

International Postal Money Order (371)

NOT Available

International Reply Coupons (381)

Fee: $2.20

Registered Mail (330)

Fee: $11.75

Maximum Indemnity: $47.33
Available for First-Class Mail International, including postcards and Flat Rate Envelopes and Small Flat Rate Priced Boxes, and matter for the blind or other physically handicapped persons. Not applicable to M-bags.

Restricted Delivery (350)

NOT Available

Return Receipt (340)

Fee: $2.35

Available for registered mail and insured Priority Mail International parcels only.

New Zealand
(Includes Cook Islands and Niue)

Country Conditions for Mailing

Prohibitions (130)
Bank notes, coins, and other forms of currency are prohibited in all classes of mail, including registered First-Class Mail International items, insured parcels, and Express Mail International shipments, that are sent to New Zealand.
Radioactive materials.

Restrictions
Addressees are required to obtain import licenses from the New Zealand customs authorities for all shipments except the following:
Bona fide gifts not exceeding 100 New Zealand dollars in value.
Firearms require the addressee has police permission.
Meat or meat products and fish and fish products are admitted only conditionally.
Merchandise for the addressee's personal use, not for his or her business or professional use or for sale or trade, and not exceeding 20 New Zealand dollars in value.
Used clothing and used bedding must be for personal use of persons in New Zealand, or with permission of the New Zealand Minister of Customs. Worn out clothing not for personal use must be clean and disinfected, or it will be done at the addressee's expense.

Observations
1. Each commercial shipment must be covered by a commercial invoice showing the current domestic price of the goods (that is, what the price would be if sold in the United States) and the selling price to the purchaser in New Zealand. The invoice must include a certificate as to the value of the goods, prepared in prescribed form, and signed by the shipper. Printed blanks for the invoice and certificate can be purchased from printing firms specializing in such supplies.
2. The completed invoice must be sent to the addressee by First-Class Mail International. It is desirable to send one copy by air and another by ordinary means.

Customs Forms Required (123)
First-Class Mail International items and Priority Mail International Flat Rate Envelopes and Small Flat Rate Priced Boxes:
PS Form 2976 (see 123.61)
Priority Mail International parcels:
PS Form 2976-A inside 2976-E (envelope)

Global Express Guaranteed (210) Price Group 6

Refer to Notice 123, *Price List*, for the applicable retail, commercial base, or commercial plus price.
Weight Limit: 70 lbs.

Insurance (212.5)

Insured Amount not over	Fee	Insured Amount not over	Fee
$100	No Fee	For document reconstruction insurance or non-document insurance coverage above $800, add $1.00 per $100 or fraction thereof, up to a maximum of $2,499 per shipment.	
200	$1.00		
300	2.00		
400	3.00		
500	4.00		
600	5.00		
700	6.00		
800	7.00	$2,499 max.	$24.00

Value Limit (212.1)
The maximum value of a GXG shipment to this country is $2,499 or a lesser amount if limited by content or value.

Size Limits (211.22)
The surface area of the address side of the item to be mailed must be large enough to completely contain the Global Express Guaranteed Air Waybill/Shipping Invoice (shipping label), postage, endorsement, and any applicable markings. The shipping label is approximately 5.5 inches high and 9.5 inches long.
Maximum length: 46 inches
Maximum width: 35 inches
Maximum height: 46 inches
Maximum length and girth combined: 108 inches

General Conditions for Mailing
See Publication 141, *Global Express Guaranteed Service Guide,* for information about areas served in the destination country, allowable contents, packaging and labeling requirements, tracking and tracing, service standards, and other conditions for mailing.

Express Mail International (220) Price Group 10

Refer to Notice 123, *Price List*, for the applicable retail, commercial base, or commercial plus price.
Weight Limit: 66 lbs.

Express Mail International — Flat Rate Envelope and Flat Rate Boxes
The maximum weight for the Express Mail International Flat Rate Envelope and the Express Mail International Flat Rate Boxes is 20 pounds. Refer to Notice 123, *Price List*, for the applicable retail, commercial base, or commercial plus price.

Insurance (222.8)
Available for **Express Mail International merchandise shipments** only

Insured Amount not over	Fee	Insured Amount not over	Fee
$100	No Fee	For insurance coverage above $2,000, add $1.50 for each $500 or fraction thereof, up to a maximum of $5,000 per shipment.	
200	$0.85		
500	2.35		
1,000	3.85		
1,500	5.35		
2,000	6.85	$5,000 max.	$15.85

Articles Admitted	Required Customs Form/Endorsement
Correspondence, business papers, and documents.	No form required. Endorse item clearly next to mailing label as BUSINESS PAPERS.
Computer data and merchandise samples without commercial value.	PS Form 2976, *Customs — CN 22 and Sender's Declaration.*
Merchandise and all articles subject to customs duty.	PS Form 2976-A, *Customs Declaration and Dispatch Note CP 72,* inside a PS Form 2976-E, *Customs Declaration Envelope CP 91.*

Size Limits (221.52)
Maximum length: 36 inches
Maximum length and girth combined: 79 inches

Note:
Coins; banknotes; currency notes, including paper money; securities of any kind payable to bearer; traveler's checks; platinum, gold, and silver; precious stones; jewelry; watches; and other valuable articles are prohibited in Express Mail International shipments to New Zealand.

Reciprocal Service Name: Courier Post International

Country Code: NZ

Areas Served:
All locations in New Zealand except the Ross Dependency.
For Cook Islands, only Rarotonga.

Priority Mail International (230) Price Group 10

Refer to Notice 123, *Price List*, for the applicable retail, commercial base, or commercial plus price.
Weight Limit: 66 lbs.

Note: *Ordinary Priority Mail International includes indemnity at no cost based on weight. (See 230.)*

Priority Mail International — Flat Rate
Flat Rate Envelopes or Small Flat Rate Priced Boxes: The maximum weight is 4 pounds. Refer to Notice 123, *Price List*, for the applicable retail, commercial base, or commercial plus price.

Flat Rate Boxes — Medium and Large: The maximum weight is 20 pounds, or the limit set by the individual country, whichever is less. Refer to Notice 123, *Price List*, for the retail, commercial base, or commercial plus price.

Insurance (232.92)
Available for **Priority Mail International merchandise parcels** only (see 323.72 for markings)

Insured Amount not over	Fee	Insured Amount not over	Fee
$50	$2.45		
100	3.60	Add $1.15 for each additional $100 or fraction of insurance coverage.	
200	4.75		
300	5.90		
400	7.05		
500	8.20	$1,025 max.	$15.10

Size Limits (231.22)
Maximum length: 60 inches
Maximum length and girth combined: 108 inches

First-Class Mail International (240) Price Group 6
For the prices and maximum weights for letters, large envelopes (flats), packages (small packets), and postcards, see Notice 123, *Price List*.

Size Limits
Letters: See 241.212
Postcards: See 241.221
Large Envelopes (Flats): See 241.232
Packages (Small Packets): See 241.242 and 241.243

Airmail M-bags (260) — Direct Sack to One Addressee Price Group 6

Refer to Notice 123, *Price List*, for the applicable retail, commercial base, or commercial plus price.
Weight Limit: 66 lbs.

Matter for the Blind (270)
Free when sent as First-Class Mail International, including Priority Mail International Flat Rate Envelopes and Small Flat Rate Priced Boxes. Weight limit: 4 pounds.
Free when sent as Priority Mail International. Weight limit: 15 pounds.

Extra Services

Certificate of Mailing (313)

Individual Pieces	Fee
Individual article (PS Form 3817)	$1.15
Firm mailing books (PS Form 3877), per article listed (minimum 3)	0.44
Duplicate copy of PS Form 3817 or PS Form 3877 (per page)	1.15
Bulk Quantities	**Fee**
First 1,000 pieces (or fraction thereof)	$6.70
Each additional 1,000 pieces (or fraction thereof)	0.80
Duplicate copy of PS Form 3606	1.15

COD and Certified **NOT** for International Mail

International Business Reply Service (382)
Fee: Envelopes up to 2 ounces $1.50; Cards $1.00

International Postal Money Order (371)
NOT Available

International Reply Coupons (381) **Fee:** $2.20

Registered Mail (330) **Fee:** $11.75
Maximum Indemnity: $47.33
Available for First-Class Mail International, including postcards and Flat Rate Envelopes and Small Flat Rate Priced Boxes, and matter for the blind or other physically handicapped persons. Not applicable to M-bags.

Restricted Delivery (350) **Fee:** $4.55
Available for registered mail with a return receipt.
Endorsements: A remettre en main propre.

Return Receipt (340) **Fee:** $2.35
Available for registered mail and insured Priority Mail International parcels only.

Nicaragua

Country Conditions for Mailing

Prohibitions (130)

Ammunition.
Coins; banknotes; currency notes (paper money); traveler's checks; securities payable to bearer; platinum, gold or silver, manufactured or not; precious stones; jewelry, and other valuable articles unless sent in insured Priority Mail International.
Communist material or literature.
Foreign lottery tickets.
Lighters.
Pharmaceutical specialties not registered in Nicaragua: pharmaceutical preparations or secret remedies of unknown composition whose formulas have not been made public.
Police whistles.
Telegraph equipment.

Restrictions

Firearms require the permission of the Government.

Observations

Tape, adhesive strips, or gummed paper should not be used to seal registered items unless the signature or name of the sender is written or stamped on the tape.

Customs Forms Required (123)

First-Class Mail International items and Priority Mail International Flat Rate Envelopes and Small Flat Rate Priced Boxes:
PS Form 2976 (see 123.61)
Priority Mail International parcels:
PS Form 2976-A inside 2976-E (envelope)

Global Express Guaranteed (210) Price Group 8

Refer to Notice 123, *Price List*, for the applicable retail, commercial base, or commercial plus price.
Weight Limit: 70 lbs.

Insurance (212.5)

Insured Amount not over	Fee	Insured Amount not over	Fee
$100	No Fee	For document reconstruction insurance or non-document insurance coverage above $800, add $1.00 per $100 or fraction thereof, up to a maximum of $2,499 per shipment.	
200	$1.00		
300	2.00		
400	3.00		
500	4.00		
600	5.00		
700	6.00		
800	7.00	$2,499 max.	$24.00

Value Limit (212.1)

The maximum value of a GXG shipment to this country is $2,499 or a lesser amount if limited by content or value.

Size Limits (211.22)

The surface area of the address side of the item to be mailed must be large enough to completely contain the Global Express Guaranteed Air Waybill/Shipping Invoice (shipping label), postage, endorsement, and any applicable markings. The shipping label is approximately 5.5 inches high and 9.5 inches long.
Maximum length: 46 inches
Maximum width: 35 inches
Maximum height: 46 inches
Maximum length and girth combined: 108 inches

General Conditions for Mailing

See Publication 141, *Global Express Guaranteed Service Guide,* for information about areas served in the destination country, allowable contents, packaging and labeling requirements, tracking and tracing, service standards, and other conditions for mailing.

Express Mail International (220) Price Group 9

Refer to Notice 123, *Price List*, for the applicable retail, commercial base, or commercial plus price.
Weight Limit: 55 lbs.

Express Mail International — Flat Rate Envelope and Flat Rate Boxes

The maximum weight for the Express Mail International Flat Rate Envelope and the Express Mail International Flat Rate Boxes is 20 pounds. Refer to Notice 123, *Price List*, for the applicable retail, commercial base, or commercial plus price.

Insurance (222.8)

Available for **Express Mail International merchandise shipments** only

Insured Amount not over	Fee	Insured Amount not over	Fee
$100	No Fee	For insurance coverage above $2,000, add $1.50 for each $500 or fraction thereof, up to a maximum of $5,000 per shipment.	
200	$0.85		
500	2.35		
1,000	3.85		
1,500	5.35		
2,000	6.85	$5,000 max.	$15.85

Articles Admitted	Required Customs Form/Endorsement
Correspondence and business papers.	PS Form 2976, *Customs — CN 22 and Sender's Declaration.*
Merchandise samples without commercial value and not subject to customs duty.	PS Form 2976, *Customs — CN 22 and Sender's Declaration.*
Merchandise and all articles subject to customs duty.	PS Form 2976-A, *Customs Declaration and Dispatch Note CP 72,* inside a PS Form 2976-E, *Customs Declaration Envelope CP 91.* A commercial invoice must be included in the item.

Size Limits (221.52)

Maximum length: 36 inches
Maximum length and girth combined: 79 inches

Note:

Coins; banknotes; currency notes, including paper money; securities of any kind payable to bearer; traveler's checks; platinum, gold, and silver; precious stones; jewelry; watches; and other valuable articles are prohibited in Express Mail International shipments to Nicaragua.

Reciprocal Service Name: Express Mail Service

Country Code: NI

Areas Served: All

Priority Mail International (230) Price Group 9

Refer to Notice 123, *Price List*, for the applicable retail, commercial base, or commercial plus price.
Weight Limit: 66 lbs.

Note: *Ordinary Priority Mail International includes indemnity at no cost based on weight. (See 230.)*

Priority Mail International — Flat Rate

Flat Rate Envelopes or Small Flat Rate Priced Boxes: The maximum weight is 4 pounds. Refer to Notice 123, *Price List*, for the applicable retail, commercial base, or commercial plus price.

Flat Rate Boxes — Medium and Large: The maximum weight is 20 pounds, or the limit set by the individual country, whichever is less. Refer to Notice 123, *Price List*, for the retail, commercial base, or commercial plus price.

Insurance (232.92) NOT Available

Size Limits (231.22)

Maximum length: 42 inches
Maximum length and girth combined: 79 inches

First-Class Mail International (240) Price Group 9

For the prices and maximum weights for letters, large envelopes (flats), packages (small packets), and postcards, see Notice 123, *Price List*.

Size Limits

Letters: See 241.212
Postcards: See 241.221
Large Envelopes (Flats): See 241.232
Packages (Small Packets): See 241.242 and 241.243

Airmail M-bags (260) — Direct Sack to One Addressee Price Group 9

Refer to Notice 123, *Price List*, for the applicable retail, commercial base, or commercial plus price.
Weight Limit: 66 lbs.

Matter for the Blind (270)

Free when sent as First-Class Mail International, including Priority Mail International Flat Rate Envelopes and Small Flat Rate Priced Boxes. Weight limit: 4 pounds.
Free when sent as Priority Mail International. Weight limit: 15 pounds.

Extra Services

Certificate of Mailing (313)

Individual Pieces	Fee
Individual article (PS Form 3817)	$1.15
Firm mailing books (PS Form 3877), per article listed (minimum 3)	0.44
Duplicate copy of PS Form 3817 or PS Form 3877 (per page)	1.15
Bulk Quantities	**Fee**
First 1,000 pieces (or fraction thereof)	$6.70
Each additional 1,000 pieces (or fraction thereof)	0.80
Duplicate copy of PS Form 3606	1.15

COD and Certified **NOT** for International Mail

International Business Reply Service (382)

Fee: Envelopes up to 2 ounces $1.50; Cards $1.00

International Postal Money Order (371)

NOT Available

International Reply Coupons (381) **Fee:** $2.20

Registered Mail (330) **Fee:** $11.75

Maximum Indemnity: $47.33
Available for First-Class Mail International, including postcards and Flat Rate Envelopes and Small Flat Rate Priced Boxes, and matter for the blind or other physically handicapped persons. Not applicable to M-bags.

Restricted Delivery (350) NOT Available

Return Receipt (340) **Fee:** $2.35

Available for registered mail only.

Niger

Country Conditions for Mailing

Prohibitions (130)
Daggers, knives, weapons.
Firing caps, and loaded metal cartridges for portable firearms; ammunition.
Perishable infectious biological substances.
Perishable noninfectious biological substances.
Products using the Red Cross or Geneva Cross as a trademark.
Publications in Arabic.
Radioactive materials.
Rough, uncut diamonds.
Tins of fish exceeding 1 kg in weight.
Weights and measures not of the metric system.

Restrictions
No list furnished.

Observations
First-Class Mail International items containing dutiable articles must be registered.

Customs Forms Required (123)
First-Class Mail International items and Priority Mail International Flat Rate Envelopes and Small Flat Rate Priced Boxes:
PS Form 2976 (see 123.61)
Priority Mail International parcels:
PS Form 2976-A inside 2976-E (envelope)

Global Express Guaranteed (210) Price Group 4

Refer to Notice 123, *Price List*, for the applicable retail, commercial base, or commercial plus price.
Weight Limit: 70 lbs.

Insurance (212.5)

Insured Amount not over	Fee	Insured Amount not over	Fee
$100	No Fee	For document reconstruction insurance or non-document insurance coverage above $800, add $1.00 per $100 or fraction thereof, up to a maximum of $2,499 per shipment.	
200	$1.00		
300	2.00		
400	3.00		
500	4.00		
600	5.00		
700	6.00		
800	7.00	$2,499 max.	$24.00

Value Limit (212.1)
The maximum value of a GXG shipment to this country is $2,499 or a lesser amount if limited by content or value.

Size Limits (211.22)
The surface area of the address side of the item to be mailed must be large enough to completely contain the Global Express Guaranteed Air Waybill/Shipping Invoice (shipping label), postage, endorsement, and any applicable markings. The shipping label is approximately 5.5 inches high and 9.5 inches long.
Maximum length: 46 inches
Maximum width: 35 inches
Maximum height: 46 inches
Maximum length and girth combined: 108 inches

General Conditions for Mailing
See Publication 141, *Global Express Guaranteed Service Guide,* for information about areas served in the destination country, allowable contents, packaging and labeling requirements, tracking and tracing, service standards, and other conditions for mailing.

Express Mail International (220) Price Group 7

Refer to Notice 123, *Price List*, for the applicable retail, commercial base, or commercial plus price.
Weight Limit: 70 lbs.

Express Mail International — Flat Rate Envelope and Flat Rate Boxes
The maximum weight for the Express Mail International Flat Rate Envelope and the Express Mail International Flat Rate Boxes is 20 pounds. Refer to Notice 123, *Price List*, for the applicable retail, commercial base, or commercial plus price.

Insurance (222.8)
Available for **Express Mail International merchandise shipments** only

Insured Amount not over	Fee	Insured Amount not over	Fee
$100	No Fee	For insurance coverage above $2,000, add $1.50 for each $500 or fraction thereof, up to a maximum of $5,000 per shipment.	
200	$0.85		
500	2.35		
1,000	3.85		
1,500	5.35		
2,000	6.85	$5,000 max.	$15.85

Articles Admitted	Required Customs Form/Endorsement
Correspondence, business papers, and computer data.	PS Form 2976, *Customs — CN 22 and Sender's Declaration.* Endorse item clearly next to mailing label as BUSINESS PAPERS.
Merchandise samples without commercial value.	PS Form 2976-A, *Customs Declaration and Dispatch Note CP 72,* inside a PS Form 2976-E, *Customs Declaration Envelope CP 91.*
Merchandise and any articles subject to customs duty.	PS Form 2976-A, *Customs Declaration and Dispatch Note CP 72,* inside a PS Form 2976-E, *Customs Declaration Envelope CP 91*.

Size Limits (221.52)
Maximum length: 36 inches
Maximum length and girth combined: 79 inches

Notes:

1. Coins; banknotes; currency notes, including paper money; securities of any kind payable to bearer; traveler's checks; platinum, gold, and silver; precious stones; jewelry; watches; and other valuable articles are prohibited in Express Mail International shipments to Niger.
2. All Express Mail International items sent to Niger must bear the telephone number of the addressee to facilitate delivery.

Reciprocal Service Name: Sahel Express Postal SAPOST

Country Code: NE

Areas Served:
Express Mail International is available ***only*** to the following location:
Niamey (Agadez-Arlit)

Priority Mail International (230) Price Group 7

Refer to Notice 123, *Price List*, for the applicable retail, commercial base, or commercial plus price.
Weight Limit: 70 lbs.

Note: *Ordinary Priority Mail International includes indemnity at no cost based on weight. (See 230.)*

Priority Mail International — Flat Rate

Flat Rate Envelopes or Small Flat Rate Priced Boxes: The maximum weight is 4 pounds. Refer to Notice 123, *Price List*, for the applicable retail, commercial base, or commercial plus price.

Flat Rate Boxes — Medium and Large: The maximum weight is 20 pounds, or the limit set by the individual country, whichever is less. Refer to Notice 123, *Price List*, for the retail, commercial base, or commercial plus price.

Insurance (232.92) NOT Available

Size Limits (231.22)

Maximum length: 42 inches
Maximum length and girth combined: 79 inches

First-Class Mail International (240) Price Group 7

For the prices and maximum weights for letters, large envelopes (flats), packages (small packets), and postcards, see Notice 123, *Price List*.

Size Limits

Letters: See 241.212
Postcards: See 241.221
Large Envelopes (Flats): See 241.232
Packages (Small Packets): See 241.242 and 241.243

Airmail M-bags (260) — Direct Sack to One Addressee Price Group 7

Refer to Notice 123, *Price List*, for the applicable retail, commercial base, or commercial plus price.
Weight Limit: 66 lbs.

Matter for the Blind (270)

Free when sent as First-Class Mail International, including Priority Mail International Flat Rate Envelopes and Small Flat Rate Priced Boxes. Weight limit: 4 pounds.
Free when sent as Priority Mail International. Weight limit: 15 pounds.

Extra Services

Certificate of Mailing (313)

Individual Pieces	Fee
Individual article (PS Form 3817)	$1.15
Firm mailing books (PS Form 3877), per article listed (minimum 3)	0.44
Duplicate copy of PS Form 3817 or PS Form 3877 (per page)	1.15
Bulk Quantities	**Fee**
First 1,000 pieces (or fraction thereof)	$6.70
Each additional 1,000 pieces (or fraction thereof)	0.80
Duplicate copy of PS Form 3606	1.15

COD and Certified **NOT** for International Mail

International Business Reply Service (382)

Fee: Envelopes up to 2 ounces $1.50; Cards $1.00

International Postal Money Order (371)

NOT Available

International Reply Coupons (381) **Fee:** $2.20

Registered Mail (330) **Fee:** $11.75

Maximum Indemnity: $47.33
Available for First-Class Mail International, including postcards and Flat Rate Envelopes and Small Flat Rate Priced Boxes, and matter for the blind or other physically handicapped persons. Not applicable to M-bags.

Restricted Delivery (350) NOT Available

Return Receipt (340) **Fee:** $2.35

Available for registered mail only.

Nigeria

Country Conditions for Mailing

Prohibitions (130)
Arms, ammunition, caps and metal cartridges for firearms.
Coins; banknotes; currency notes, except from a bank; and addressed to a bank in Nigeria.
Hardware of all kinds.
Lottery circulars, advertisements.
Perishable infectious biological substances.
Perishable noninfectious biological substances.
Radioactive materials.

Restrictions
Medicines including proprietary preparations; penicillin, streptomycin, and similar substances require a license.
Precious stones and manufactured gold, platinum, or silver are admitted only if not more than 5 francs in value.
Used clothing must be accompanied by a certificate of disinfection.

Observations
None

Customs Forms Required (123)
First-Class Mail International items and Priority Mail International Flat Rate Envelopes and Small Flat Rate Priced Boxes:
PS Form 2976 (see 123.61)
Priority Mail International parcels:
PS Form 2976-A inside 2976-E (envelope)

Global Express Guaranteed (210) Price Group 4

Refer to Notice 123, *Price List*, for the applicable retail, commercial base, or commercial plus price.
Weight Limit: 70 lbs.

Insurance (212.5)

Insured Amount not over	Fee	Insured Amount not over	Fee
$100	No Fee	For document reconstruction insurance or non-document insurance coverage above $800, add $1.00 per $100 or fraction thereof, up to a maximum of $2,499 per shipment.	
200	$1.00		
300	2.00		
400	3.00		
500	4.00		
600	5.00		
700	6.00		
800	7.00	$2,499 max.	$24.00

Value Limit (212.1)
The maximum value of a GXG shipment to this country is $2,499 or a lesser amount if limited by content or value.

Size Limits (211.22)
The surface area of the address side of the item to be mailed must be large enough to completely contain the Global Express Guaranteed Air Waybill/Shipping Invoice (shipping label), postage, endorsement, and any applicable markings. The shipping label is approximately 5.5 inches high and 9.5 inches long.
Maximum length: 46 inches
Maximum width: 35 inches
Maximum height: 46 inches
Maximum length and girth combined: 108 inches

General Conditions for Mailing
See Publication 141, *Global Express Guaranteed Service Guide,* for information about areas served in the destination country, allowable contents, packaging and labeling requirements, tracking and tracing, service standards, and other conditions for mailing.

Express Mail International (220) Price Group 7

Refer to Notice 123, *Price List*, for the applicable retail, commercial base, or commercial plus price.
Weight Limit: 66 lbs.

Express Mail International — Flat Rate Envelope and Flat Rate Boxes

The maximum weight for the Express Mail International Flat Rate Envelope and the Express Mail International Flat Rate Boxes is 20 pounds. Refer to Notice 123, *Price List*, for the applicable retail, commercial base, or commercial plus price.

Insurance (222.8)
Available for **Express Mail International merchandise shipments** only

Insured Amount not over	Fee	Insured Amount not over	Fee
$100	No Fee	For insurance coverage above $2,000, add $1.50 for each $500 or fraction thereof, up to a maximum of $5,000 per shipment.	
200	$0.85		
500	2.35		
1,000	3.85		
1,500	5.35		
2,000	6.85	$5,000 max.	$15.85

Articles Admitted	Required Customs Form/Endorsement
Correspondence, business papers, and computer data.	PS Form 2976, *Customs — CN 22 and Sender's Declaration.* Endorse item clearly next to mailing label as BUSINESS PAPERS.
Merchandise samples without commercial value.	PS Form 2976, *Customs — CN 22 and Sender's Declaration.*
Merchandise and any articles subject to customs duty.	PS Form 2976-A, *Customs Declaration and Dispatch Note CP 72,* inside a PS Form 2976-E, *Customs Declaration Envelope CP 91.*

Size Limits (221.52)
Maximum length: 36 inches
Maximum length and girth combined: 79 inches

Note:
Coins; banknotes; currency notes, including paper money; securities of any kind payable to bearer; traveler's checks; platinum, gold, and silver; precious stones; jewelry; watches; and other valuable articles are prohibited in Express Mail International shipments to Nigeria.

Reciprocal Service Name: Speedpost

Country Code: NG

Areas Served: All

Priority Mail International (230) Price Group 7

Refer to Notice 123, *Price List*, for the applicable retail, commercial base, or commercial plus price.
Weight Limit: 66 lbs.

Note: *Ordinary Priority Mail International includes indemnity at no cost based on weight. (See 230.)*

Priority Mail International — Flat Rate
Flat Rate Envelopes or Small Flat Rate Priced Boxes: The maximum weight is 4 pounds. Refer to Notice 123, *Price List*, for the applicable retail, commercial base, or commercial plus price.

Flat Rate Boxes — Medium and Large: The maximum weight is 20 pounds, or the limit set by the individual country, whichever is less. Refer to Notice 123, *Price List*, for the retail, commercial base, or commercial plus price.

Insurance (232.92) NOT Available

Size Limits (231.22)
Maximum length: 42 inches
Maximum length and girth combined: 79 inches

First-Class Mail International (240) Price Group 7
For the prices and maximum weights for letters, large envelopes (flats), packages (small packets), and postcards, see Notice 123, *Price List*.

Size Limits
Letters: See 241.212
Postcards: See 241.221
Large Envelopes (Flats): See 241.232
Packages (Small Packets): See 241.242 and 241.243

Airmail M-bags (260) — Direct Sack to One Addressee Price Group 7

Refer to Notice 123, *Price List*, for the applicable retail, commercial base, or commercial plus price.
Weight Limit: 66 lbs.

Matter for the Blind (270)
Free when sent as First-Class Mail International, including Priority Mail International Flat Rate Envelopes and Small Flat Rate Priced Boxes. Weight limit: 4 pounds.
Free when sent as Priority Mail International. Weight limit: 15 pounds.

Extra Services

Certificate of Mailing (313)

Individual Pieces	Fee
Individual article (PS Form 3817)	$1.15
Firm mailing books (PS Form 3877), per article listed (minimum 3)	0.44
Duplicate copy of PS Form 3817 or PS Form 3877 (per page)	1.15
Bulk Quantities	**Fee**
First 1,000 pieces (or fraction thereof)	$6.70
Each additional 1,000 pieces (or fraction thereof)	0.80
Duplicate copy of PS Form 3606	1.15

COD and Certified **NOT** for International Mail

International Business Reply Service (382)
Fee: Envelopes up to 2 ounces $1.50; Cards $1.00

International Postal Money Order (371)
NOT Available

International Reply Coupons (381) **Fee:** $2.20

Registered Mail (330) **Fee:** $11.75
Maximum Indemnity: $47.33
Available for First-Class Mail International, including postcards and Flat Rate Envelopes and Small Flat Rate Priced Boxes, and matter for the blind or other physically handicapped persons. Not applicable to M-bags.

Restricted Delivery (350) NOT Available

Return Receipt (340) **Fee:** $2.35
Available for registered mail only.

Norway

Country Conditions for Mailing

Prohibitions (130)

Firing caps, loaded metal cartridges for portable firearms, non-explosive elements of artillery fuses and matches.
Radioactive materials.
Substances considered explosive; inflammable or dangerous.

Restrictions

Cosmetics (perfumes, cosmetics, and sanitary products containing alcohol) must be approved by the Technical Alcohol committee.
Importation of radio and telecommunications equipment (equipment like radio remote controls or other wireless systems including walkie-talkies, remote controls, and wireless telephones) is prohibited without the authorization of the Norwegian Telecommunication Regulatory Authority, Olso. Ordinary TV and radio receivers are exempt from the regulation. Any imported dutiable equipment must be reported to the Norwegian Broadcasting Corporation by the importer.
Medicaments and other products used for medical treatment require authorization by the Ministry of Health. Serum, vaccines, and other bacteriological and serological preparations may be imported by labs and institutes approved by the Norwegian State.
Norwegian bank notes and coins and Norwegian and foreign securities of all kinds require authorization of the national Bank of Norway. Bills for exchange and bank drafts in payment of goods exported from Norway may be imported without prior authorization.
Products of animal origin intended for consumption/use by humans or pet animals are subject to authorization by the Veterinary Department of the Ministry of Agriculture in addition to customs clearance permission. Exception is made for some products. A list can be obtained from the Ministry of Agriculture in Norway.
The importation of firearms, ammunition, and parts of such and other military equipment is subject to the authorization of the Norwegian Police.

Observations

A commercial invoice in duplicate is required for customs clearance of all commercial items.

Customs Forms Required (123)

First-Class Mail International items and Priority Mail International Flat Rate Envelopes and Small Flat Rate Priced Boxes:
PS Form 2976 (see 123.61)
Priority Mail International parcels:
PS Form 2976-A inside 2976-E (envelope)

Global Express Guaranteed (210) Price Group 5

Refer to Notice 123, *Price List*, for the applicable retail, commercial base, or commercial plus price.
Weight Limit: 70 lbs.

Insurance (212.5)

Insured Amount not over	Fee	Insured Amount not over	Fee
$100	No Fee	For document reconstruction insurance or non-document insurance coverage above $800, add $1.00 per $100 or fraction thereof, up to a maximum of $2,499 per shipment.	
200	$1.00		
300	2.00		
400	3.00		
500	4.00		
600	5.00		
700	6.00		
800	7.00	$2,499 max.	$24.00

Value Limit (212.1)

The maximum value of a GXG shipment to this country is $2,499 or a lesser amount if limited by content or value.

Size Limits (211.22)

The surface area of the address side of the item to be mailed must be large enough to completely contain the Global Express Guaranteed Air Waybill/Shipping Invoice (shipping label), postage, endorsement, and any applicable markings. The shipping label is approximately 5.5 inches high and 9.5 inches long.
Maximum length: 46 inches
Maximum width: 35 inches
Maximum height: 46 inches
Maximum length and girth combined: 108 inches

General Conditions for Mailing

See Publication 141, *Global Express Guaranteed Service Guide,* for information about areas served in the destination country, allowable contents, packaging and labeling requirements, tracking and tracing, service standards, and other conditions for mailing.

Express Mail International (220) Price Group 5

Refer to Notice 123, *Price List*, for the applicable retail, commercial base, or commercial plus price.
Weight Limit: 66 lbs.

Express Mail International — Flat Rate Envelope and Flat Rate Boxes

The maximum weight for the Express Mail International Flat Rate Envelope and the Express Mail International Flat Rate Boxes is 20 pounds. Refer to Notice 123, *Price List*, for the applicable retail, commercial base, or commercial plus price.

Insurance (222.8)

Available for **Express Mail International merchandise shipments** only

Insured Amount not over	Fee
$100	No Fee
200	$0.85
500	2.35
650 max.	3.85

Articles Admitted	Required Customs Form/Endorsement
Correspondence and business papers.	No form required. Endorse item clearly next to mailing label as BUSINESS PAPERS.
Merchandise samples without commercial value, computer data, and microfiche.	PS Form 2976, *Customs — CN 22 and Sender's Declaration.*
Merchandise, advertising materials, and all articles subject to customs duty.	PS Form 2976-A, *Customs Declaration and Dispatch Note CP 72,* inside a PS Form 2976-E, *Customs Declaration Envelope CP 91.*

Size Limits (221.52)
Maximum length: 60 inches
Maximum length and girth combined: 108 inches

Notes:
1. Commercial shipments must be accompanied by two (2) copies of the invoice.
2. Coins; banknotes; currency notes, including paper money; securities of any kind payable to bearer; traveler's checks; platinum, gold, and silver; precious stones; jewelry; watches; and other valuable articles are prohibited in Express Mail International shipments to Norway.

Reciprocal Service Name: Kurerpost

Country Code: NO

Areas Served: All

Priority Mail International (230) Price Group 5

Refer to Notice 123, *Price List*, for the applicable retail, commercial base, or commercial plus price.
Weight Limit: 66 lbs.

Note: *Ordinary Priority Mail International includes indemnity at no cost based on weight. (See 230.)*

Priority Mail International — Flat Rate
Flat Rate Envelopes or Small Flat Rate Priced Boxes: The maximum weight is 4 pounds. Refer to Notice 123, *Price List*, for the applicable retail, commercial base, or commercial plus price.

Flat Rate Boxes — Medium and Large: The maximum weight is 20 pounds, or the limit set by the individual country, whichever is less. Refer to Notice 123, *Price List*, for the retail, commercial base, or commercial plus price.

Insurance (232.92)
Available for **Priority Mail International merchandise parcels** only (see 323.72 for markings)

Insured Amount not over	Fee
$50	$2.45
100	3.60
200	4.75
300	5.90
400	7.05
500	8.20
600	9.35
650 max.	10.50

Size Limits (231.22)
Maximum length: 60 inches
Maximum length and girth combined: 108 inches

First-Class Mail International (240) Price Group 5
For the prices and maximum weights for letters, large envelopes (flats), packages (small packets), and postcards, see Notice 123, *Price List*.

Size Limits
Letters: See 241.212
Postcards: See 241.221
Large Envelopes (Flats): See 241.232
Packages (Small Packets): See 241.242 and 241.243

Airmail M-bags (260) — Direct Sack to One Addressee Price Group 5

Refer to Notice 123, *Price List*, for the applicable retail, commercial base, or commercial plus price.
Weight Limit: 66 lbs.

Matter for the Blind (270)
Free when sent as First-Class Mail International, including Priority Mail International Flat Rate Envelopes and Small Flat Rate Priced Boxes. Weight limit: 4 pounds.
Free when sent as Priority Mail International. Weight limit: 15 pounds.

Extra Services

Certificate of Mailing (313)

Individual Pieces	Fee
Individual article (PS Form 3817)	$1.15
Firm mailing books (PS Form 3877), per article listed (minimum 3)	0.44
Duplicate copy of PS Form 3817 or PS Form 3877 (per page)	1.15
Bulk Quantities	**Fee**
First 1,000 pieces (or fraction thereof)	$6.70
Each additional 1,000 pieces (or fraction thereof)	0.80
Duplicate copy of PS Form 3606	1.15

COD and Certified **NOT** for International Mail

International Business Reply Service (382)
Fee: Envelopes up to 2 ounces $1.50; Cards $1.00

International Postal Money Order (371)
NOT Available

International Reply Coupons (381) **Fee:** $2.20

Registered Mail (330) **Fee:** $11.75
Maximum Indemnity: $47.33
Available for First-Class Mail International, including postcards and Flat Rate Envelopes and Small Flat Rate Priced Boxes, and matter for the blind or other physically handicapped persons. Not applicable to M-bags.

Restricted Delivery (350) NOT Available

Return Receipt (340) **Fee:** $2.35
Available for registered mail and insured Priority Mail International parcels only.

Oman

Country Conditions for Mailing

Prohibitions (130)
Arms; ammunition or parts thereof.
Perishable infectious biological substances.
Perishable noninfectious biological substances.
Radioactive materials.

Restrictions
Medicines of all kinds must be authorized by the Ministry of Health.
Radio sets, transmitters, receivers, and telegraphic apparatus require a permit from the Ministry of Posts, Telegraphs, and Telephones.

Observations
First-Class Mail International items containing dutiable articles must be registered.

Customs Forms Required (123)
First-Class Mail International items and Priority Mail International Flat Rate Envelopes and Small Flat Rate Priced Boxes:
PS Form 2976 (see 123.61)
Priority Mail International parcels:
PS Form 2976-A inside 2976-E (envelope)

Global Express Guaranteed (210) Price Group 6

Refer to Notice 123, *Price List*, for the applicable retail, commercial base, or commercial plus price.
Weight Limit: 70 lbs.

Insurance (212.5)

Insured Amount not over	Fee	Insured Amount not over	Fee
$100	No Fee	For document reconstruction insurance or non-document insurance coverage above $800, add $1.00 per $100 or fraction thereof, up to a maximum of $2,499 per shipment.	
200	$1.00		
300	2.00		
400	3.00		
500	4.00		
600	5.00		
700	6.00		
800	7.00	$2,499 max.	$24.00

Value Limit (212.1)
The maximum value of a GXG shipment to this country is $2,499 or a lesser amount if limited by content or value.

Size Limits (211.22)
The surface area of the address side of the item to be mailed must be large enough to completely contain the Global Express Guaranteed Air Waybill/Shipping Invoice (shipping label), postage, endorsement, and any applicable markings. The shipping label is approximately 5.5 inches high and 9.5 inches long.
Maximum length: 46 inches
Maximum width: 35 inches
Maximum height: 46 inches
Maximum length and girth combined: 108 inches

General Conditions for Mailing
See Publication 141, *Global Express Guaranteed Service Guide,* for information about areas served in the destination country, allowable contents, packaging and labeling requirements, tracking and tracing, service standards, and other conditions for mailing.

Express Mail International (220) Price Group 8

Refer to Notice 123, *Price List*, for the applicable retail, commercial base, or commercial plus price.
Weight Limit: 66 lbs.

Express Mail International — Flat Rate Envelope and Flat Rate Boxes
The maximum weight for the Express Mail International Flat Rate Envelope and the Express Mail International Flat Rate Boxes is 20 pounds. Refer to Notice 123, *Price List*, for the applicable retail, commercial base, or commercial plus price.

Insurance (222.8)
Available for **Express Mail International merchandise shipments** only

Insured Amount not over	Fee	Insured Amount not over	Fee
$100	No Fee	For insurance coverage above $2,000, add $1.50 for each $500 or fraction thereof, up to a maximum of $5,000 per shipment.	
200	$0.85		
500	2.35		
1,000	3.85		
1,500	5.35		
2,000	6.85	$5,000 max.	$15.85

Articles Admitted	Required Customs Form/Endorsement
Correspondence, business papers, and computer data.	No form required. Endorse item clearly next to mailing label as BUSINESS PAPERS.
Merchandise samples without commercial value.	PS Form 2976, *Customs — CN 22 and Sender's Declaration.*
Merchandise and all articles subject to customs duty.	PS Form 2976-A, *Customs Declaration and Dispatch Note CP 72,* inside a PS Form 2976-E, *Customs Declaration Envelope CP 91*.

Size Limits (221.52)
Maximum length: 36 inches
Maximum length and girth combined: 79 inches

Note:
Coins; banknotes; currency notes, including paper money; securities of any kind payable to bearer; traveler's checks; platinum, gold, and silver; precious stones; jewelry; watches; and other valuable articles are prohibited in Express Mail International shipments to Oman.

Reciprocal Service Name: Data Post

Country Code: OM

Areas Served:

Airport Area	Al-Seeb	Muttrah
Al-Aamrat	Al-Shatefi	Qaboos
Al-Alzaiba	Al-Wattaya	Riyam
Al-Bustan	Bausher	Ruwi
Al-Ghubra	Darsait	Salalah
Al-Jadid	Ghallah	Seh-Aizabi
Al-Khoudh	Hillat Al-Said	Sidab
Al-Khuwair	Kaibooh	Wadi Adai
Al-Nahda	Madinat	Wadi-Alkabir
Al-Qurm	Mina-Alfahal	Wadi-Hattat
Al-Rusail	Mumtaz Area	
Al-Sarooj	Muscat	

Priority Mail International (230) Price Group 8

Refer to Notice 123, *Price List*, for the applicable retail, commercial base, or commercial plus price.

Weight Limit: 44 lbs.

Note: *Ordinary Priority Mail International includes indemnity at no cost based on weight. (See 230.)*

Priority Mail International — Flat Rate

Flat Rate Envelopes or Small Flat Rate Priced Boxes: The maximum weight is 4 pounds. Refer to Notice 123, *Price List*, for the applicable retail, commercial base, or commercial plus price.

Flat Rate Boxes — Medium and Large: The maximum weight is 20 pounds, or the limit set by the individual country, whichever is less. Refer to Notice 123, *Price List*, for the retail, commercial base, or commercial plus price.

Insurance (232.92)

Available for **Priority Mail International merchandise parcels** only (see 323.72 for markings)

Insured Amount not over	Fee
$50	$2.45
100	3.60
200	4.75
300	5.90
400	7.05
500	8.20
575 max.	9.35

Size Limits (231.22)

Maximum length: 42 inches
Maximum length and girth combined: 79 inches

First-Class Mail International (240) Price Group 8

For the prices and maximum weights for letters, large envelopes (flats), packages (small packets), and postcards, see Notice 123, *Price List*.

Size Limits

Letters: See 241.212
Postcards: See 241.221
Large Envelopes (Flats): See 241.232
Packages (Small Packets): See 241.242 and 241.243

Airmail M-bags (260) — Direct Sack to One Addressee Price Group 8

Refer to Notice 123, *Price List*, for the applicable retail, commercial base, or commercial plus price.

Weight Limit: 66 lbs.

Matter for the Blind (270) NOT Available

Extra Services

Certificate of Mailing (313)

Individual Pieces	Fee
Individual article (PS Form 3817)	$1.15
Firm mailing books (PS Form 3877), per article listed (minimum 3)	0.44
Duplicate copy of PS Form 3817 or PS Form 3877 (per page)	1.15

Bulk Quantities	Fee
First 1,000 pieces (or fraction thereof)	$6.70
Each additional 1,000 pieces (or fraction thereof)	0.80
Duplicate copy of PS Form 3606	1.15

COD and Certified **NOT** for International Mail

International Business Reply Service (382)

Fee: Envelopes up to 2 ounces $1.50; Cards $1.00

International Postal Money Order (371)

NOT Available

International Reply Coupons (381) **Fee:** $2.20

Registered Mail (330) **Fee:** $11.75

Maximum Indemnity: $47.33
Available for First-Class Mail International, including postcards and Flat Rate Envelopes and Small Flat Rate Priced Boxes, and matter for the blind or other physically handicapped persons. Not applicable to M-bags.

Restricted Delivery (350) **Fee:** $4.55

Available for registered mail with a return receipt.
Endorsements: A remettre en main propre.

Return Receipt (340) **Fee:** $2.35

Available for registered mail and insured Priority Mail International parcels only.

Pakistan

Country Conditions for Mailing

Prohibitions (130)

Arms, ammunition except when sent on behalf of the Government.

Coins; bank notes; currency notes (paper money); securities of any kind payable to bearer; traveler's checks; platinum, gold, and silver (manufactured or not); precious stones; jewelry; and other valuable articles are prohibited in all classes of mail, including Express Mail International shipments, that are mailed to Pakistan.

Lottery tickets or circulars relating to lotteries.

Perishable infectious biological substances.

Radioactive materials.

Restrictions

Bank checks, original educational documents, Graduate Record Examination (GRE), Test of English as a Foreign Language (TOEFL), and International English Language Testing System (IELTS) tests may be sent only by Express Mail International service or with Registered Mail service.

Mobile telephones, watches, fountain pens, cameras, eyeglasses, toys, and other valuable consumer products must be mailed in insured parcels.

Observations

1. Import permits or licenses are required for many types of goods. Therefore, senders should ascertain from the addressee before mailing whether the necessary documents are held.
2. Import licenses are not required for unsolicited gift shipments involving no remittance of foreign exchange from Pakistan provided that such parcels do not contain textiles (other than made up garments and second-hand clothing), imitation jewelry, watches and watch bands, fountain pens, cameras, radio sets, and trophies (such as of animals and birds). All goods sent in gift shipments are subject to a maximum value of 1,000 rupees per person per year. For this purpose the year commences on 1 July and ends on 30 June.

Customs Forms Required (123)

First-Class Mail International items and Priority Mail International Flat Rate Envelopes and Small Flat Rate Priced Boxes:
PS Form 2976 (see 123.61)

Priority Mail International parcels:
PS Form 2976-A inside 2976-E (envelope)

Global Express Guaranteed (210) Price Group 6

Refer to Notice 123, *Price List*, for the applicable retail, commercial base, or commercial plus price.
Weight Limit: 70 lbs.

Insurance (212.5)

Insured Amount not over	Fee	Insured Amount not over	Fee
$100	No Fee	For document reconstruction insurance or non-document insurance coverage above $800, add $1.00 per $100 or fraction thereof, up to a maximum of $2,499 per shipment.	
200	$1.00		
300	2.00		
400	3.00		
500	4.00		
600	5.00		
700	6.00		
800	7.00	$2,499 max.	$24.00

Value Limit (212.1)

The maximum value of a GXG shipment to this country is $2,499 or a lesser amount if limited by content or value.

Size Limits (211.22)

The surface area of the address side of the item to be mailed must be large enough to completely contain the Global Express Guaranteed Air Waybill/Shipping Invoice (shipping label), postage, endorsement, and any applicable markings. The shipping label is approximately 5.5 inches high and 9.5 inches long.

Maximum length: 46 inches
Maximum width: 35 inches
Maximum height: 46 inches
Maximum length and girth combined: 108 inches

General Conditions for Mailing

See Publication 141, *Global Express Guaranteed Service Guide,* for information about areas served in the destination country, allowable contents, packaging and labeling requirements, tracking and tracing, service standards, and other conditions for mailing.

Express Mail International (220) Price Group 6

Refer to Notice 123, *Price List*, for the applicable retail, commercial base, or commercial plus price.
Weight Limit: 66 lbs.

Express Mail International — Flat Rate Envelope and Flat Rate Boxes

The maximum weight for the Express Mail International Flat Rate Envelope and the Express Mail International Flat Rate Boxes is 20 pounds. Refer to Notice 123, *Price List*, for the applicable retail, commercial base, or commercial plus price.

Insurance (222.8)

Available for **Express Mail International merchandise shipments** only

Insured Amount not over	Fee	Insured Amount not over	Fee
$100	No Fee	For insurance coverage above $2,000, add $1.50 for each $500 or fraction thereof, up to a maximum of $5,000 per shipment.	
200	$0.85		
500	2.35		
1,000	3.85		
1,500	5.35		
2,000	6.85	$5,000 max.	$15.85

Articles Admitted	Required Customs Form/Endorsement
Correspondence, business papers,and computer data.	No form required. Endorse item clearly next to mailing label as BUSINESS PAPERS.
Merchandise samples without commercial value.	PS Form 2976, *Customs — CN 22 and Sender's Declaration.*
Merchandise and all articles subject to customs duty.	PS Form 2976-A, *Customs Declaration and Dispatch Note CP 72,* inside a PS Form 2976-E, *Customs Declaration Envelope CP 91.*

Size Limits (221.52)

Maximum length: 42 inches
Maximum length and girth combined: 79 inches

Notes:

1. Coins; banknotes; currency notes, including paper money; securities of any kind payable to bearer; traveler's checks; platinum, gold, and silver; precious stones; jewelry; watches; and other valuable articles are prohibited in Express Mail International shipments to Pakistan.
2. Express Mail International shipments mailed to Pakistan may not contain valuable consumer products, such as mobile telephones, watches, fountain pens, cameras, eyeglasses, and toys.

Reciprocal Service Name: Data Post

Country Code: PK

Areas Served:

Abbottabad	Jhelum	Rahim Yar Khan
Attock	Karachi	Rawalpindi
Bahawalpur	Kasur	Sahiwal
Dera Ghazi Khan	Kotri	Sargodha
Dera Ismail Khan	Lahore	Sialkot
Faisalabad	Larkana	Sukkur
Gilgit	Mardan	Taxila
Gujranwala	Mripur (AK) GPO	Toba
Gujrat	Multan	Tek Singh
Hyderabad	Muzaffarabad	Wah Cantt
Islamabad	Peshawar	
Jhang	Quetta	

Priority Mail International (230) Price Group 6

Refer to Notice 123, *Price List*, for the applicable retail, commercial base, or commercial plus price.
Weight Limit: 70 lbs.

Note: *Ordinary Priority Mail International includes indemnity at no cost based on weight. (See 230.)*

Priority Mail International — Flat Rate

Flat Rate Envelopes or Small Flat Rate Priced Boxes: The maximum weight is 4 pounds. Refer to Notice 123, *Price List*, for the applicable retail, commercial base, or commercial plus price.

Flat Rate Boxes — Medium and Large: The maximum weight is 20 pounds, or the limit set by the individual country, whichever is less. Refer to Notice 123, *Price List*, for the retail, commercial base, or commercial plus price.

Insurance (232.92)

Available for **Priority Mail International merchandise parcels** only (see 323.72 for markings)

Insured Amount not over	Fee	Insured Amount not over	Fee
$50	$2.45		
100	3.60	Add $1.15 for each additional $100 or fraction of insurance coverage.	
200	4.75		
300	5.90		
400	7.05		
500	8.20	$867 max.	$12.80

Size Limits (231.22)

Maximum length: 42 inches
Maximum length and girth combined: 79 inches

First-Class Mail International (240) Price Group 6

For the prices and maximum weights for letters, large envelopes (flats), packages (small packets), and postcards, see Notice 123, *Price List*.

Size Limits

Letters: See 241.212
Postcards: See 241.221
Large Envelopes (Flats): See 241.232
Packages (Small Packets): See 241.242 and 241.243

Airmail M-bags (260) — Direct Sack to One Addressee Price Group 6

Refer to Notice 123, *Price List*, for the applicable retail, commercial base, or commercial plus price.
Weight Limit: 66 lbs.

Matter for the Blind (270)

Free when sent as First-Class Mail International, including Priority Mail International Flat Rate Envelopes and Small Flat Rate Priced Boxes. Weight limit: 4 pounds.
Free when sent as Priority Mail International. Weight limit: 15 pounds.

Extra Services

Certificate of Mailing (313)

Individual Pieces	Fee
Individual article (PS Form 3817)	$1.15
Firm mailing books (PS Form 3877), per article listed (minimum 3)	0.44
Duplicate copy of PS Form 3817 or PS Form 3877 (per page)	1.15
Bulk Quantities	**Fee**
First 1,000 pieces (or fraction thereof)	$6.70
Each additional 1,000 pieces (or fraction thereof)	0.80
Duplicate copy of PS Form 3606	1.15

COD and Certified **NOT** for International Mail

International Business Reply Service (382)

Fee: Envelopes up to 2 ounces $1.50; Cards $1.00

International Postal Money Order (371)

NOT Available

International Reply Coupons (381) **Fee:** $2.20

Registered Mail (330) **Fee:** $11.75

Maximum Indemnity: $47.33
Available for First-Class Mail International, including postcards and Flat Rate Envelopes and Small Flat Rate Priced Boxes, and matter for the blind or other physically handicapped persons. Not applicable to M-bags.

Restricted Delivery (350) NOT Available

Return Receipt (340) **Fee:** $2.35

Available for registered mail and insured Priority Mail International parcels only.

Panama

Country Conditions for Mailing

Prohibitions (130)

Coins; banknotes; currency notes (paper money); securities of any kind, payable to bearer; traveler's checks; platinum, gold, and silver (manufactured or not); precious stones; jewelry; and other valuable articles.
Fatty, liquid, or easily liquefiable substances.
Lottery tickets and circulars.
Perishable fruits and plants.
Perishable infectious biological substances.
Radioactive materials.
Sweetmeats and pastries.

Restrictions

No list furnished.

Observations

First-Class Mail International items may not contain dutiable articles.

Customs Forms Required (123)

First-Class Mail International items and Priority Mail International Flat Rate Envelopes and Small Flat Rate Priced Boxes:
PS Form 2976 (see 123.61)
Priority Mail International parcels:
PS Form 2976-A inside 2976-E (envelope)

Global Express Guaranteed (210) Price Group 8

Refer to Notice 123, *Price List*, for the applicable retail, commercial base, or commercial plus price.
Weight Limit: 70 lbs.

Insurance (212.5)

Insured Amount not over	Fee	Insured Amount not over	Fee
$100	No Fee	For document reconstruction insurance or non-document insurance coverage above $800, add $1.00 per $100 or fraction thereof, up to a maximum of $2,499 per shipment.	
200	$1.00		
300	2.00		
400	3.00		
500	4.00		
600	5.00		
700	6.00		
800	7.00	$2,499 max.	$24.00

Value Limit (212.1)

The maximum value of a GXG shipment to this country is $2,499 or a lesser amount if limited by content or value.

Size Limits (211.22)

The surface area of the address side of the item to be mailed must be large enough to completely contain the Global Express Guaranteed Air Waybill/Shipping Invoice (shipping label), postage, endorsement, and any applicable markings. The shipping label is approximately 5.5 inches high and 9.5 inches long.
Maximum length: 46 inches
Maximum width: 35 inches
Maximum height: 46 inches
Maximum length and girth combined: 108 inches

General Conditions for Mailing

See Publication 141, *Global Express Guaranteed Service Guide,* for information about areas served in the destination country, allowable contents, packaging and labeling requirements, tracking and tracing, service standards, and other conditions for mailing.

Express Mail International (220) Price Group 9

Refer to Notice 123, *Price List*, for the applicable retail, commercial base, or commercial plus price.
Weight Limit: 66 lbs.

Express Mail International — Flat Rate Envelope and Flat Rate Boxes

The maximum weight for the Express Mail International Flat Rate Envelope and the Express Mail International Flat Rate Boxes is 20 pounds. Refer to Notice 123, *Price List*, for the applicable retail, commercial base, or commercial plus price.

Insurance (222.8)

Available for **Express Mail International merchandise shipments** only

Insured Amount not over	Fee	Insured Amount not over	Fee
$100	No Fee	For insurance coverage above $2,000, add $1.50 for each $500 or fraction thereof, up to a maximum of $5,000 per shipment.	
200	$0.85		
500	2.35		
1,000	3.85		
1,500	5.35		
2,000	6.85	$5,000 max.	$15.85

Articles Admitted	Required Customs Form/Endorsement
Correspondence, business papers, and computer data.	No form required. Endorse item clearly next to mailing label as BUSINESS PAPERS.
Merchandise samples without commercial value.	PS Form 2976, *Customs — CN 22 and Sender's Declaration.*
Merchandise and all articles subject to customs duty.	PS Form 2976-A, *Customs Declaration and Dispatch Note CP 72,* inside a PS Form 2976-E, *Customs Declaration Envelope CP 91*.

Size Limits (221.52)

Maximum length: 36 inches
Maximum length and girth combined: 79 inches

Notes:

1. Express Mail International items should bear either the home or business address of the addressee. Items addressed to a post office box only are delivered to these boxes, thus inconveniencing the addressees who have to go to the post office to claim them.
2. Coins; banknotes; currency notes, including paper money; securities of any kind payable to bearer; traveler's checks; platinum, gold, and silver; precious stones; jewelry; watches; and other valuable articles are prohibited in Express Mail International shipments to Panama.

Reciprocal Service Name: CAI

Country Code: PA

Areas Served:

Aguadulce
Anton
Balboa
Bocas del Toro
Chitre
Chorrera
Colon
Cristobal
David
Las Tablas
Panama City
Penonome
Santiago
Zona Libre de Colon (Free Zone of Colon)

Priority Mail International (230) Price Group 9

Refer to Notice 123, *Price List*, for the applicable retail, commercial base, or commercial plus price.
Weight Limit: 70 lbs.

Note: *Ordinary Priority Mail International includes indemnity at no cost based on weight. (See 230.)*

Priority Mail International — Flat Rate

Flat Rate Envelopes or Small Flat Rate Priced Boxes: The maximum weight is 4 pounds. Refer to Notice 123, *Price List*, for the applicable retail, commercial base, or commercial plus price.

Flat Rate Boxes — Medium and Large: The maximum weight is 20 pounds, or the limit set by the individual country, whichever is less. Refer to Notice 123, *Price List*, for the retail, commercial base, or commercial plus price.

Insurance (232.92) NOT Available

Size Limits (231.22)

Maximum length: 42 inches
Maximum length and girth combined: 79 inches

First-Class Mail International (240) Price Group 9

For the prices and maximum weights for letters, large envelopes (flats), packages (small packets), and postcards, see Notice 123, *Price List*.

Size Limits

Letters: See 241.212
Postcards: See 241.221
Large Envelopes (Flats): See 241.232
Packages (Small Packets): See 241.242 and 241.243

Airmail M-bags (260) — Direct Sack to One Addressee Price Group 9

Refer to Notice 123, *Price List*, for the applicable retail, commercial base, or commercial plus price.
Weight Limit: 66 lbs.

Matter for the Blind (270)

Free when sent as First-Class Mail International, including Priority Mail International Flat Rate Envelopes and Small Flat Rate Priced Boxes. Weight limit: 4 pounds.
Free when sent as Priority Mail International. Weight limit: 15 pounds.

Extra Services

Certificate of Mailing (313)

Individual Pieces	Fee
Individual article (PS Form 3817)	$1.15
Firm mailing books (PS Form 3877), per article listed (minimum 3)	0.44
Duplicate copy of PS Form 3817 or PS Form 3877 (per page)	1.15
Bulk Quantities	**Fee**
First 1,000 pieces (or fraction thereof)	$6.70
Each additional 1,000 pieces (or fraction thereof)	0.80
Duplicate copy of PS Form 3606	1.15

COD and Certified **NOT** for International Mail

International Business Reply Service (382)

Fee: Envelopes up to 2 ounces $1.50; Cards $1.00

International Postal Money Order (371)

NOT Available

International Reply Coupons (381) **Fee:** $2.20

Registered Mail (330) **Fee:** $11.75

Maximum Indemnity: $47.33
Available for First-Class Mail International, including postcards and Flat Rate Envelopes and Small Flat Rate Priced Boxes, and matter for the blind or other physically handicapped persons. Not applicable to M-bags.

Restricted Delivery (350) NOT Available

Return Receipt (340) **Fee:** $2.35

Available for registered mail only.

Papua New Guinea

Country Conditions for Mailing

Prohibitions (130)
Perishable infectious biological substances.
Perishable noninfectious biological substances.

Restrictions
No list furnished.

Observations
None

Customs Forms Required (123)
First-Class Mail International items and Priority Mail International Flat Rate Envelopes and Small Flat Rate Priced Boxes:
PS Form 2976 (see 123.61)
Priority Mail International parcels:
PS Form 2976-A inside 2976-E (envelope)

Global Express Guaranteed (210) Price Group 8

Refer to Notice 123, *Price List*, for the applicable retail, commercial base, or commercial plus price.
Weight Limit: 70 lbs.

Insurance (212.5)

Insured Amount not over	Fee	Insured Amount not over	Fee
$100	No Fee	For document reconstruction insurance or non-document insurance coverage above $800, add $1.00 per $100 or fraction thereof, up to a maximum of $2,499 per shipment.	
200	$1.00		
300	2.00		
400	3.00		
500	4.00		
600	5.00		
700	6.00		
800	7.00	$2,499 max.	$24.00

Value Limit (212.1)
The maximum value of a GXG shipment to this country is $2,499 or a lesser amount if limited by content or value.

Size Limits (211.22)
The surface area of the address side of the item to be mailed must be large enough to completely contain the Global Express Guaranteed Air Waybill/Shipping Invoice (shipping label), postage, endorsement, and any applicable markings. The shipping label is approximately 5.5 inches high and 9.5 inches long.
Maximum length: 28 inches
Maximum width: 35 inches
Maximum height: 46 inches
Maximum length and girth combined: 108 inches

General Conditions for Mailing
See Publication 141, *Global Express Guaranteed Service Guide,* for information about areas served in the destination country, allowable contents, packaging and labeling requirements, tracking and tracing, service standards, and other conditions for mailing.

Express Mail International (220) Price Group 6

Refer to Notice 123, *Price List*, for the applicable retail, commercial base, or commercial plus price.
Weight Limit: 55 lbs.

Express Mail International — Flat Rate Envelope and Flat Rate Boxes
The maximum weight for the Express Mail International Flat Rate Envelope and the Express Mail International Flat Rate Boxes is 20 pounds. Refer to Notice 123, *Price List*, for the applicable retail, commercial base, or commercial plus price.

Insurance (222.8)
Available for **Express Mail International merchandise shipments** only

Insured Amount not over	Fee	Insured Amount not over	Fee
$100	No Fee	For insurance coverage above $2,000, add $1.50 for each $500 or fraction thereof, up to a maximum of $5,000 per shipment.	
200	$0.85		
500	2.35		
1,000	3.85		
1,500	5.35		
2,000	6.85	$5,000 max.	$15.85

Articles Admitted	Required Customs Form/Endorsement
Correspondence, business papers, computer data, and advertising material.	PS Form 2976, *Customs — CN 22 and Sender's Declaration.* Endorse item clearly next to mailing label as BUSINESS PAPERS.
Merchandise samples without commercial value.	PS Form 2976, *Customs — CN 22 and Sender's Declaration.*
Merchandise and all articles subject to customs duty.	PS Form 2976-A, *Customs Declaration and Dispatch Note CP 72,* inside a PS Form 2976-E, *Customs Declaration Envelope CP 91*.

Size Limits (221.52)
Maximum length: 36 inches
Maximum length and girth combined: 79 inches

Note:
Coins; banknotes; currency notes, including paper money; securities of any kind payable to bearer; traveler's checks; platinum, gold, and silver; precious stones; jewelry; watches; and other valuable articles are prohibited in Express Mail International shipments to Papua New Guinea.

Reciprocal Service Name: International Priority Mail

Country Code: PG

Areas Served: All
Note: Service is currently suspended to Bougainville. Please check with a local Post Office facility for a service update.

Priority Mail International (230) Price Group 6

Refer to Notice 123, *Price List*, for the applicable retail, commercial base, or commercial plus price.
Weight Limit: 44 lbs.

Note: *Ordinary Priority Mail International includes indemnity at no cost based on weight. (See 230.)*

Priority Mail International — Flat Rate

Flat Rate Envelopes or Small Flat Rate Priced Boxes: The maximum weight is 4 pounds. Refer to Notice 123, *Price List*, for the applicable retail, commercial base, or commercial plus price.

Flat Rate Boxes — Medium and Large: The maximum weight is 20 pounds, or the limit set by the individual country, whichever is less. Refer to Notice 123, *Price List*, for the retail, commercial base, or commercial plus price.

Insurance (232.92)

Available for **Priority Mail International merchandise parcels** only (see 323.72 for markings)

Insured Amount not over	Fee
$50	$2.45
100	3.60
200	4.75
300	5.90
400	7.05
445 max.	8.20

Size Limits (231.22)

Maximum length: 42 inches
Maximum length and girth combined: 79 inches

First-Class Mail International (240) Price Group 6

For the prices and maximum weights for letters, large envelopes (flats), packages (small packets), and postcards, see Notice 123, *Price List*.

Size Limits

Letters: See 241.212
Postcards: See 241.221
Large Envelopes (Flats): See 241.232
Packages (Small Packets): See 241.242 and 241.243

Airmail M-bags (260) — Direct Sack to One Addressee Price Group 6

Refer to Notice 123, *Price List*, for the applicable retail, commercial base, or commercial plus price.
Weight Limit: 66 lbs.

Matter for the Blind (270)

Free when sent as First-Class Mail International, including Priority Mail International Flat Rate Envelopes and Small Flat Rate Priced Boxes. Weight limit: 4 pounds.
Free when sent as Priority Mail International. Weight limit: 15 pounds.

Extra Services

Certificate of Mailing (313)

Individual Pieces	Fee
Individual article (PS Form 3817)	$1.15
Firm mailing books (PS Form 3877), per article listed (minimum 3)	0.44
Duplicate copy of PS Form 3817 or PS Form 3877 (per page)	1.15
Bulk Quantities	**Fee**
First 1,000 pieces (or fraction thereof)	$6.70
Each additional 1,000 pieces (or fraction thereof)	0.80
Duplicate copy of PS Form 3606	1.15

COD and Certified **NOT** for International Mail

International Business Reply Service (382)

Fee: Envelopes up to 2 ounces $1.50; Cards $1.00

International Postal Money Order (371)

NOT Available

International Reply Coupons (381) **Fee:** $2.20

Registered Mail (330) **Fee:** $11.75

Maximum Indemnity: $47.33
Available for First-Class Mail International, including postcards and Flat Rate Envelopes and Small Flat Rate Priced Boxes, and matter for the blind or other physically handicapped persons. Not applicable to M-bags.

Restricted Delivery (350) NOT Available

Return Receipt (340) **Fee:** $2.35

Available for registered mail and insured Priority Mail International parcels only.

Paraguay

Country Conditions for Mailing

Prohibitions (130)

Arms and munitions except under permit.
Batteries.
Most foodstuffs including butter and cheeses; sugar; peanuts; salt; fats of vegetable origin; rice; fruit; and tomato juices.
Plastic toys.
Soaps.
Stocking and socks except those made of jersey.
Suitcases; leather bags.
Used clothing and apparel.
Wool blankets.

Restrictions

Medicines, drugs require a permit from the Ministry of Public Health.
Printed matter in general use such as check books; forms; receipts; posters; notices of sale and commercial invoices; and statements are not admitted in Priority Mail International parcels.
Used linen must be accompanied by a disinfection certificate.

Observations

None

Customs Forms Required (123)

First-Class Mail International items and Priority Mail International Flat Rate Envelopes and Small Flat Rate Priced Boxes:
PS Form 2976 (see 123.61)
Priority Mail International parcels:
PS Form 2976-A inside 2976-E (envelope)

Global Express Guaranteed (210) Price Group 8

Refer to Notice 123, *Price List*, for the applicable retail, commercial base, or commercial plus price.
Weight Limit: 70 lbs.

Insurance (212.5)

Insured Amount not over	Fee	Insured Amount not over	Fee
$100	No Fee	For document reconstruction insurance or non-document insurance coverage above $800, add $1.00 per $100 or fraction thereof, up to a maximum of $2,499 per shipment.	
200	$1.00		
300	2.00		
400	3.00		
500	4.00		
600	5.00		
700	6.00		
800	7.00	$2,499 max.	$24.00

Value Limit (212.1)

The maximum value of a GXG shipment to this country is $2,499 or a lesser amount if limited by content or value.

Size Limits (211.22)

The surface area of the address side of the item to be mailed must be large enough to completely contain the Global Express Guaranteed Air Waybill/Shipping Invoice (shipping label), postage, endorsement, and any applicable markings. The shipping label is approximately 5.5 inches high and 9.5 inches long.
Maximum length: 46 inches
Maximum width: 35 inches
Maximum height: 46 inches
Maximum length and girth combined: 108 inches

General Conditions for Mailing

See Publication 141, *Global Express Guaranteed Service Guide,* for information about areas served in the destination country, allowable contents, packaging and labeling requirements, tracking and tracing, service standards, and other conditions for mailing.

Express Mail International (220) Price Group 9

Refer to Notice 123, *Price List*, for the applicable retail, commercial base, or commercial plus price.
Weight Limit: 55 lbs.

Express Mail International — Flat Rate Envelope and Flat Rate Boxes

The maximum weight for the Express Mail International Flat Rate Envelope and the Express Mail International Flat Rate Boxes is 20 pounds. Refer to Notice 123, *Price List*, for the applicable retail, commercial base, or commercial plus price.

Insurance (222.8)

Available for **Express Mail International merchandise shipments** only

Insured Amount not over	Fee	Insured Amount not over	Fee
$100	No Fee	For insurance coverage above $2,000, add $1.50 for each $500 or fraction thereof, up to a maximum of $5,000 per shipment.	
200	$0.85		
500	2.35		
1,000	3.85		
1,500	5.35		
2,000	6.85	$5,000 max.	$15.85

Articles Admitted	Required Customs Form/Endorsement
Correspondence and business papers.	PS Form 2976, *Customs — CN 22 and Sender's Declaration.*
Merchandise samples without commercial value.	PS Form 2976, *Customs — CN 22 and Sender's Declaration.*
Merchandise and all articles subject to customs duty.	PS Form 2976-A, *Customs Declaration and Dispatch Note CP 72,* inside a PS Form 2976-E, *Customs Declaration Envelope CP 91.*

Size Limits (221.52)

Maximum length: 36 inches
Maximum length and girth combined: 79 inches

Note:

Coins; banknotes; currency notes, including paper money; securities of any kind payable to bearer; traveler's checks; platinum, gold, and silver; precious stones; jewelry; watches; and other valuable articles are prohibited in Express Mail International shipments to Paraguay.

Reciprocal Service Name: Serce (Servicio Especial)

Country Code: PY

Areas Served:

Aregua
Asunción
Caacupé
Caaguazu
Campus UNA
Capiata
Ciudad del Este
Concepción
Encarnación
Fernando de Mora
Lambaré
Loma Pyta
Luque
Paraguari
Pedro Juan Caballero
Pilar
San Juan Bautista (Misiones)
San Lorenzo
Villarica

Priority Mail International (230) Price Group 9

Refer to Notice 123, *Price List*, for the applicable retail, commercial base, or commercial plus price.
Weight Limit: 66 lbs.

Note: *Ordinary Priority Mail International includes indemnity at no cost based on weight. (See 230.)*

Priority Mail International — Flat Rate

Flat Rate Envelopes or Small Flat Rate Priced Boxes: The maximum weight is 4 pounds. Refer to Notice 123, *Price List*, for the applicable retail, commercial base, or commercial plus price.

Flat Rate Boxes — Medium and Large: The maximum weight is 20 pounds, or the limit set by the individual country, whichever is less. Refer to Notice 123, *Price List*, for the retail, commercial base, or commercial plus price.

Insurance (232.92) NOT Available

Size Limits (231.22)

Maximum length: 42 inches
Maximum length and girth combined: 79 inches

First-Class Mail International (240) Price Group 9

For the prices and maximum weights for letters, large envelopes (flats), packages (small packets), and postcards, see Notice 123, *Price List*.

Size Limits

Letters: See 241.212
Postcards: See 241.221
Large Envelopes (Flats): See 241.232
Packages (Small Packets): See 241.242 and 241.243

Airmail M-bags (260) — Direct Sack to One Addressee Price Group 9

Refer to Notice 123, *Price List*, for the applicable retail, commercial base, or commercial plus price.
Weight Limit: 66 lbs.

Matter for the Blind (270)

Free when sent as First-Class Mail International, including Priority Mail International Flat Rate Envelopes and Small Flat Rate Priced Boxes. Weight limit: 4 pounds.
Free when sent as Priority Mail International. Weight limit: 15 pounds.

Extra Services

Certificate of Mailing (313)

Individual Pieces	Fee
Individual article (PS Form 3817)	$1.15
Firm mailing books (PS Form 3877), per article listed (minimum 3)	0.44
Duplicate copy of PS Form 3817 or PS Form 3877 (per page)	1.15
Bulk Quantities	**Fee**
First 1,000 pieces (or fraction thereof)	$6.70
Each additional 1,000 pieces (or fraction thereof)	0.80
Duplicate copy of PS Form 3606	1.15

COD and Certified **NOT** for International Mail

International Business Reply Service (382)

Fee: Envelopes up to 2 ounces $1.50; Cards $1.00

International Postal Money Order (371)

NOT Available

International Reply Coupons (381) **Fee:** $2.20

Registered Mail (330) **Fee:** $11.75

Maximum Indemnity: $47.33
Available for First-Class Mail International, including postcards and Flat Rate Envelopes and Small Flat Rate Priced Boxes, and matter for the blind or other physically handicapped persons. Not applicable to M-bags.

Restricted Delivery (350) NOT Available

Return Receipt (340) **Fee:** $2.35

Available for registered mail only.

Peru

Country Conditions for Mailing

Prohibitions (130)

Accessories and personal items.
Agricultural pesticides containing active ingredients (ethylene dichloride, ethylene oxide, monocrotophos).
Arms and munitions including spare parts or other accessories and components.
Artificial flowers and interior ornaments.
Cartographic and geographic texts, books, floppy disks, video cassettes, and any medium containing a distortion or misrepresentation of the Peruvian national territory and its borders.
Ceramic products and imitation jewelry.
Cigars, cigarettes, and tobacco.
Coins; banknotes; currency notes (paper money); traveler's checks; securities payable to bearer; platinum, gold or silver, manufactured or not; precious stones; jewelry; and other valuable articles.
Clothing, accessories, and underwear.
Communist propaganda.
Contraceptive products, remedies, or apparatus.
Drinks manufactured abroad under the brand name "Pisco."
Electrical household appliances.
Footwear, shoes, boots, and accessories.
Furs and clothing made of fur.
Gloves and hosiery.
Household articles of iron, steel, copper, and aluminum.
Household linens.
Lighters.
Organochlorinated pesticides and their derivatives and components.
Perfume products or soaps.
Perishable infectious biological substances.
Playing cards.
Pyrotechnic products.
Radioactive materials.
Samples of cigars, cigarettes, and tobacco.
Sound recorders and reproducing devices.
Textiles and carpets.
Toys and dolls of all kinds.
Toys known as "Yoyo Loco" or "Yoyo Chino."
Travel articles, suitcases, attache cases, kits, or similar articles.
Used clothing and shoes.
Used tires.
Waxes and creams for shoes.
Wooden utensils.

Restrictions

No list furnished.

Observations

1. First-Class Mail International items may not contain dutiable articles.
2. Each shipment valued at U.S. $200 or over must be accompanied by a consular invoice if there is a Peruvian consulate located at the place of mailing. If there is none, a commercial invoice must be furnished instead. The commercial invoice must be legalized by a Peruvian consulate or countersigned by a chamber of commerce, or if neither is available, it may bear the notarized signatures of two well-known local merchants. If the value is under U.S. $200, a commercial invoice must be furnished but need not be legalized. The consular or commercial invoice may be either enclosed in the parcel or sent separately to the addressee so as to arrive before the parcel, but the legalization must not be dated later than the day of mailing.
3. Peruvian consuls are located in principal cities of the United States.
4. Gifts addressed to persons native to the country do not require a commercial invoice unless the value of such gifts exceeds U.S. $450 per calendar year.
5. Many items are prohibited import into Peru. Therefore, senders should ascertain from the addressee before mailing whether the item may be received or not.
6. Used clothing must be accompanied by an appropriate health inspection certificate.

Customs Forms Required (123)

First-Class Mail International items and Priority Mail International Flat Rate Envelopes and Small Flat Rate Priced Boxes:
PS Form 2976 (see 123.61)
Priority Mail International parcels:
PS Form 2976-A inside 2976-E (envelope)

Global Express Guaranteed (210) Price Group 8

Refer to Notice 123, *Price List*, for the applicable retail, commercial base, or commercial plus price.
Weight Limit: 70 lbs.

Insurance (212.5)

Insured Amount not over	**Fee**	**Insured Amount** not over	**Fee**
$100	No Fee	For document reconstruction insurance or non-document insurance coverage above $800, add $1.00 per $100 or fraction thereof, up to a maximum of $2,499 per shipment.	
200	$1.00		
300	2.00		
400	3.00		
500	4.00		
600	5.00		
700	6.00		
800	7.00	$2,499 max.	$24.00

Value Limit (212.1)

The maximum value of a GXG shipment to this country is $2,499 or a lesser amount if limited by content or value.

Size Limits (211.22)

The surface area of the address side of the item to be mailed must be large enough to completely contain the Global Express Guaranteed Air Waybill/Shipping Invoice (shipping label), postage, endorsement, and any applicable markings. The shipping label is approximately 5.5 inches high and 9.5 inches long.
Maximum length: 46 inches
Maximum width: 35 inches
Maximum height: 46 inches
Maximum length and girth combined: 108 inches

General Conditions for Mailing

See Publication 141, *Global Express Guaranteed Service Guide,* for information about areas served in the destination country, allowable contents, packaging and labeling requirements, tracking and tracing, service standards, and other conditions for mailing.

Express Mail International (220) Price Group 9

Refer to Notice 123, *Price List*, for the applicable retail, commercial base, or commercial plus price.
Weight Limit: 70 lbs.

Express Mail International — Flat Rate Envelope and Flat Rate Boxes

The maximum weight for the Express Mail International Flat Rate Envelope and the Express Mail International Flat Rate Boxes is 20 pounds. Refer to Notice 123, *Price List*, for the applicable retail, commercial base, or commercial plus price.

Insurance (222.8)

Available for **Express Mail International merchandise shipments** only

Insured Amount not over	Fee	Insured Amount not over	Fee
$100	No Fee	For insurance coverage above $2,000, add $1.50 for each $500 or fraction thereof, up to a maximum of $5,000 per shipment.	
200	$0.85		
500	2.35		
1,000	3.85		
1,500	5.35		
2,000	6.85	$5,000 max.	$15.85

Articles Admitted	Required Customs Form/Endorsement
Correspondence and business papers.	PS Form 2976, *Customs — CN 22 and Sender's Declaration.* Endorse item clearly next to mailing label as BUSINESS PAPERS.
Merchandise samples without commercial value and not subject to customs duty.	PS Form 2976, *Customs — CN 22 and Sender's Declaration.*
Merchandise and all articles subject to customs duty.	PS Form 2976-A, *Customs Declaration and Dispatch Note CP 72,* inside a PS Form 2976-E, *Customs Declaration Envelope CP 91.*

Size Limits (221.52)

Maximum length: 36 inches
Maximum length and girth combined: 79 inches

Note:

Coins; banknotes; currency notes, including paper money; securities of any kind payable to bearer; traveler's checks; platinum, gold, and silver; precious stones; jewelry; watches; and other valuable articles are prohibited in Express Mail International shipments to Peru.

Reciprocal Service Name: EMS

Country Code: PE

Areas Served: All

Priority Mail International (230) Price Group 9

Refer to Notice 123, *Price List*, for the applicable retail, commercial base, or commercial plus price.
Weight Limit: 70 lbs.

Note: *Ordinary Priority Mail International includes indemnity at no cost based on weight. (See 230.)*

Priority Mail International — Flat Rate

Flat Rate Envelopes or Small Flat Rate Priced Boxes: The maximum weight is 4 pounds. Refer to Notice 123, *Price List*, for the applicable retail, commercial base, or commercial plus price.

Flat Rate Boxes — Medium and Large: The maximum weight is 20 pounds, or the limit set by the individual country, whichever is less. Refer to Notice 123, *Price List*, for the retail, commercial base, or commercial plus price.

Insurance (232.92) NOT Available

Size Limits (231.22)

Maximum length: 42 inches
Maximum length and girth combined: 79 inches

First-Class Mail International (240) Price Group 9

For the prices and maximum weights for letters, large envelopes (flats), packages (small packets), and postcards, see Notice 123, *Price List*.

Size Limits

Letters: See 241.212
Postcards: See 241.221
Large Envelopes (Flats): See 241.232
Packages (Small Packets): See 241.242 and 241.243

Airmail M-bags (260) — Direct Sack to One Addressee Price Group 9

Refer to Notice 123, *Price List*, for the applicable retail, commercial base, or commercial plus price.
Weight Limit: 66 lbs.

Matter for the Blind (270)

Free when sent as First-Class Mail International, including Priority Mail International Flat Rate Envelopes and Small Flat Rate Priced Boxes. Weight limit: 4 pounds.
Free when sent as Priority Mail International. Weight limit: 15 pounds.

Extra Services

Certificate of Mailing (313)

Individual Pieces	Fee
Individual article (PS Form 3817)	$1.15
Firm mailing books (PS Form 3877), per article listed (minimum 3)	0.44
Duplicate copy of PS Form 3817 or PS Form 3877 (per page)	1.15
Bulk Quantities	**Fee**
First 1,000 pieces (or fraction thereof)	$6.70
Each additional 1,000 pieces (or fraction thereof)	0.80
Duplicate copy of PS Form 3606	1.15

COD and Certified

NOT for International Mail

International Business Reply Service (382)

Fee: Envelopes up to 2 ounces $1.50; Cards $1.00

International Postal Money Order (371)

Use MO Form MP1

Maximum Amount Available: $700 **Fee:** $4.45

Money Order Inquiry: **Fee:** $5.50

International Reply Coupons (381)

Fee: $2.20

Registered Mail (330)

Fee: $11.75

Maximum Indemnity: $47.33

Available for First-Class Mail International, including postcards and Flat Rate Envelopes and Small Flat Rate Priced Boxes, and matter for the blind or other physically handicapped persons. Not applicable to M-bags.

Restricted Delivery (350)

NOT Available

Return Receipt (340)

Fee: $2.35

Available for registered mail only.

Philippines

Country Conditions for Mailing

Prohibitions (130)

Coffee in any form.
Coins; currency notes or securities of any kind payable to bearer; traveler's checks; platinum, gold, or silver (whether manufactured or not); precious stones; or other valuable articles.
Firearms and weapons and parts thereof including replicas of weapons; ammunition.
Gambling devices.
Liquids, easily liquefiable items, and glass or similarly fragile articles.
Lottery tickets, circulars, or advertisements relating to lotteries.
Perishable infectious biological substances.
Perishable noninfectious biological substances.
Radioactive materials.

Restrictions

No list furnished.

Observations

1. Commercial invoices that have a dutiable value of 3000 pesos and above are subject to authentication by the Philippine Consulate and to the payment of a fee of U.S. $30.
2. Philippine postal authorities recommend that letters containing checks or other negotiable instruments be sent by Registered Mail.

Customs Forms Required (123)

First-Class Mail International items and Priority Mail International Flat Rate Envelopes and Small Flat Rate Priced Boxes:
PS Form 2976 (see 123.61)
Priority Mail International parcels:
PS Form 2976-A inside 2976-E (envelope)

Global Express Guaranteed (210) Price Group 6

Refer to Notice 123, *Price List*, for the applicable retail, commercial base, or commercial plus price.
Weight Limit: 70 lbs.

Insurance (212.5)

Insured Amount not over	Fee	Insured Amount not over	Fee
$100	No Fee	For document reconstruction insurance or non-document insurance coverage above $800, add $1.00 per $100 or fraction thereof, up to a maximum of $2,499 per shipment.	
200	$1.00		
300	2.00		
400	3.00		
500	4.00		
600	5.00		
700	6.00		
800	7.00	$2,499 max.	$24.00

Value Limit (212.1)

The maximum value of a GXG shipment to this country is $2,499 or a lesser amount if limited by content or value.

Size Limits (211.22)

The surface area of the address side of the item to be mailed must be large enough to completely contain the Global Express Guaranteed Air Waybill/Shipping Invoice (shipping label), postage, endorsement, and any applicable markings. The shipping label is approximately 5.5 inches high and 9.5 inches long.
Maximum length: 46 inches
Maximum width: 35 inches
Maximum height: 46 inches
Maximum length and girth combined: 108 inches

General Conditions for Mailing

See Publication 141, *Global Express Guaranteed Service Guide,* for information about areas served in the destination country, allowable contents, packaging and labeling requirements, tracking and tracing, service standards, and other conditions for mailing.

Express Mail International (220) Price Group 6

Refer to Notice 123, *Price List*, for the applicable retail, commercial base, or commercial plus price.
Weight Limit: 44 lbs.

Express Mail International — Flat Rate Envelope and Flat Rate Boxes

The maximum weight for the Express Mail International Flat Rate Envelope and the Express Mail International Flat Rate Boxes is 20 pounds. Refer to Notice 123, *Price List*, for the applicable retail, commercial base, or commercial plus price.

Insurance (222.8)

Available for **Express Mail International merchandise shipments** only

Insured Amount not over	Fee	Insured Amount not over	Fee
$100	No Fee	For insurance coverage above $2,000, add $1.50 for each $500 or fraction thereof, up to a maximum of $5,000 per shipment.	
200	$0.85		
500	2.35		
1,000	3.85		
1,500	5.35		
2,000	6.85	$5,000 max.	$15.85

Articles Admitted	Required Customs Form/Endorsement
Correspondence and business papers.	PS Form 2976, *Customs — CN 22 and Sender's Declaration.* Endorse item clearly next to mailing label as BUSINESS PAPERS.
Merchandise samples without commercial value.	PS Form 2976, *Customs — CN 22 and Sender's Declaration.*
Merchandise and all items subject to customs duty.	PS Form 2976-A, *Customs Declaration and Dispatch Note CP 72,* inside a PS Form 2976-E, *Customs Declaration Envelope CP 91*.

Size Limits (221.52)

Maximum length: 36 inches
Maximum length and girth combined: 79 inches

Note:
Coins; banknotes; currency notes, including paper money; securities of any kind payable to bearer; traveler's checks; platinum, gold, and silver; precious stones; jewelry; watches; and other valuable articles are prohibited in Express Mail International shipments to the Philippines.

Reciprocal Service Name: Express Mail Service/EMS

Country Code: PH

Areas Served:
Express Mail International is available ***only*** to the following locations within the Philippines:

Angeles City
Bacolod City
Baguio City
Bataan Export Processing Zone (BEPZ) Mariveles Bataan
Batangas City
Butuan City
Cagayan De Oro City
Cavite City
Cebu City
Cotabato City
Dagupan City
Davao City
Dumaguete City
Iligan City
Iloilo City
Kalookan City or Caloocan City
Laoag City
Lapu-Lapu City
Las Pinas
Legaspi City
Lucena City
Makati City
Malabon
Mandaluyong City
Mandaue City
Manila
Marikina
Muntinlupa City
Naga City
Navotas
Olongapo City
Ozamis City
Pagadian City
Paranque
Pasay City
Pasig City
Pateros
Puerto Princesa City
Quezon City
San Fernando, La Union
San Fernando, Pampanga
San Juan
San Pablo City
Tacloban City
Taguig
Valenzuela
Virac, Catanduanes
Zamboanga City

Priority Mail International (230) Price Group 6

Refer to Notice 123, *Price List*, for the applicable retail, commercial base, or commercial plus price.
Weight Limit: 44 lbs.

Note: *Ordinary Priority Mail International includes indemnity at no cost based on weight. (See 230.)*

Priority Mail International — Flat Rate
Flat Rate Envelopes or Small Flat Rate Priced Boxes: The maximum weight is 4 pounds. Refer to Notice 123, *Price List*, for the applicable retail, commercial base, or commercial plus price.

Flat Rate Boxes — Medium and Large: The maximum weight is 20 pounds, or the limit set by the individual country, whichever is less. Refer to Notice 123, *Price List*, for the retail, commercial base, or commercial plus price.

Insurance (232.92) NOT Available

Size Limits (231.22)
Maximum length: 42 inches
Maximum length and girth combined: 79 inches

First-Class Mail International (240) Price Group 6
For the prices and maximum weights for letters, large envelopes (flats), packages (small packets), and postcards, see Notice 123, *Price List*.

Size Limits
Letters: See 241.212
Postcards: See 241.221
Large Envelopes (Flats): See 241.232
Packages (Small Packets): See 241.242 and 241.243

Airmail M-bags (260) — Direct Sack to One Addressee Price Group 6

Refer to Notice 123, *Price List*, for the applicable retail, commercial base, or commercial plus price.
Weight Limit: 66 lbs.

Matter for the Blind (270)
Free when sent as First-Class Mail International, including Priority Mail International Flat Rate Envelopes and Small Flat Rate Priced Boxes. Weight limit: 4 pounds.
Free when sent as Priority Mail International. Weight limit: 15 pounds.

Extra Services

Certificate of Mailing (313)

Individual Pieces	Fee
Individual article (PS Form 3817)	$1.15
Firm mailing books (PS Form 3877), per article listed (minimum 3)	0.44
Duplicate copy of PS Form 3817 or PS Form 3877 (per page)	1.15
Bulk Quantities	**Fee**
First 1,000 pieces (or fraction thereof)	$6.70
Each additional 1,000 pieces (or fraction thereof)	0.80
Duplicate copy of PS Form 3606	1.15

COD and Certified **NOT** for International Mail

International Business Reply Service (382)
Fee: Envelopes up to 2 ounces $1.50; Cards $1.00

International Postal Money Order (371)
NOT Available

International Reply Coupons (381) **Fee:** $2.20

Registered Mail (330) **Fee:** $11.75
Maximum Indemnity: $47.33
Available for First-Class Mail International, including postcards and Flat Rate Envelopes and Small Flat Rate Priced Boxes, and matter for the blind or other physically handicapped persons. Not applicable to M-bags.

Restricted Delivery (350) **Fee:** $4.55
Available for registered mail with a return receipt.
Endorsements: Deliver to addressee only.

Return Receipt (340) **Fee:** $2.35
Available for registered mail only.

Pitcairn Island

Country Conditions for Mailing

Prohibitions (130)
Coins; banknotes; currency notes (paper money); traveler's checks; securities payable to bearer; platinum, gold or silver, manufactured or not; precious stones; jewelry; and other valuable articles.
Perishable infectious biological substances.
Perishable noninfectious biological substances.
Radioactive materials.

Restrictions
No list furnished.

Observations
None

Customs Forms Required (123)
First-Class Mail International items and Priority Mail International Flat Rate Envelopes and Small Flat Rate Priced Boxes:
PS Form 2976 (see 123.61)
Priority Mail International parcels:
PS Form 2976-A inside 2976-E (envelope)

Global Express Guaranteed (210)
Not Available

Express Mail International (220)
Not Available

Priority Mail International (230) Price Group 6

Refer to Notice 123, *Price List*, for the applicable retail, commercial base, or commercial plus price.
Weight Limit: 22 lbs.

Note: *Ordinary Priority Mail International includes indemnity at no cost based on weight. (See 230.)*

Priority Mail International — Flat Rate
Flat Rate Envelopes or Small Flat Rate Priced Boxes: The maximum weight is 4 pounds. Refer to Notice 123, *Price List*, for the applicable retail, commercial base, or commercial plus price.

Flat Rate Boxes — Medium and Large: The maximum weight is 20 pounds, or the limit set by the individual country, whichever is less. Refer to Notice 123, *Price List*, for the retail, commercial base, or commercial plus price.

Insurance (232.92) NOT Available

Size Limits (231.22)
Maximum length: 42 inches
Maximum length and girth combined: 79 inches

First-Class Mail International (240) Price Group 6
For the prices and maximum weights for letters, large envelopes (flats), packages (small packets), and postcards, see Notice 123, *Price List*.

Size Limits
Letters: See 241.212
Postcards: See 241.221
Large Envelopes (Flats): See 241.232
Packages (Small Packets): See 241.242 and 241.243

Airmail M-bags (260) — Direct Sack to One Addressee Price Group 6

Refer to Notice 123, *Price List*, for the applicable retail, commercial base, or commercial plus price.
Weight Limit: 66 lbs.

Matter for the Blind (270)
Free when sent as First-Class Mail International, including Priority Mail International Flat Rate Envelopes and Small Flat Rate Priced Boxes. Weight limit: 4 pounds.
Free when sent as Priority Mail International. Weight limit: 15 pounds.

Extra Services

Certificate of Mailing (313)

Individual Pieces	Fee
Individual article (PS Form 3817)	$1.15
Firm mailing books (PS Form 3877), per article listed (minimum 3)	0.44
Duplicate copy of PS Form 3817 or PS Form 3877 (per page)	1.15
Bulk Quantities	**Fee**
First 1,000 pieces (or fraction thereof)	$6.70
Each additional 1,000 pieces (or fraction thereof)	0.80
Duplicate copy of PS Form 3606	1.15

COD and Certified **NOT** for International Mail

International Business Reply Service (382)
Fee: Envelopes up to 2 ounces $1.50; Cards $1.00

International Postal Money Order (371)
NOT Available

International Reply Coupons (381) **Fee:** $2.20

Registered Mail (330) **Fee:** $11.75
Maximum Indemnity: $47.33
Available for First-Class Mail International, including postcards and Flat Rate Envelopes and Small Flat Rate Priced Boxes, and matter for the blind or other physically handicapped persons. Not applicable to M-bags.

Restricted Delivery (350) NOT Available

Return Receipt (340) **Fee:** $2.35
Available for registered mail only.

Poland

Country Conditions for Mailing

Prohibitions (130)

Arms and ammunition.
Articles, printed matter, written documents or other articles contrary to interests of Poland.
Coins; bank notes; currency notes (paper money) including currency in circulation in the Polish Republic; traveler's checks; platinum, gold, or silver (manufactured or not); precious stones; jewelry; and other valuable items.
Perishable infectious biological substances
Perishable noninfectious biological substances
Radioactive materials.

Restrictions

Urns containing human ashes require an import permit issued by the Presidium of the Municipal Council of the locality where the urn is to be buried.

Observations

Import permits are required for many goods. Therefore, senders should ascertain from the addressee before mailing whether the necessary documents are held.

Customs Forms Required (123)

First-Class Mail International items and Priority Mail International Flat Rate Envelopes and Small Flat Rate Priced Boxes:
PS Form 2976 (see 123.61)
Priority Mail International parcels:
PS Form 2976-A inside 2976-E (envelope)

Global Express Guaranteed (210) Price Group 4

Refer to Notice 123, *Price List*, for the applicable retail, commercial base, or commercial plus price.
Weight Limit: 70 lbs.

Insurance (212.5)

Insured Amount not over	Fee	Insured Amount not over	Fee
$100	No Fee	For document reconstruction insurance or non-document insurance coverage above $800, add $1.00 per $100 or fraction thereof, up to a maximum of $2,499 per shipment.	
200	$1.00		
300	2.00		
400	3.00		
500	4.00		
600	5.00		
700	6.00		
800	7.00	$2,499 max.	$24.00

Value Limit (212.1)

The maximum value of a GXG shipment to this country is $2,499 or a lesser amount if limited by content or value.

Size Limits (211.22)

The surface area of the address side of the item to be mailed must be large enough to completely contain the Global Express Guaranteed Air Waybill/Shipping Invoice (shipping label), postage, endorsement, and any applicable markings. The shipping label is approximately 5.5 inches high and 9.5 inches long.
Maximum length: 46 inches
Maximum width: 35 inches
Maximum height: 46 inches
Maximum length and girth combined: 108 inches

General Conditions for Mailing

See Publication 141, *Global Express Guaranteed Service Guide,* for information about areas served in the destination country, allowable contents, packaging and labeling requirements, tracking and tracing, service standards, and other conditions for mailing.

Express Mail International (220) Price Group 4

Refer to Notice 123, *Price List*, for the applicable retail, commercial base, or commercial plus price.
Weight Limit: 44 lbs.

Express Mail International — Flat Rate Envelope and Flat Rate Boxes

The maximum weight for the Express Mail International Flat Rate Envelope and the Express Mail International Flat Rate Boxes is 20 pounds. Refer to Notice 123, *Price List*, for the applicable retail, commercial base, or commercial plus price.

Insurance (222.8)

Available for **Express Mail International merchandise shipments** only

Insured Amount not over	Fee	Insured Amount not over	Fee
$100	No Fee	For insurance coverage above $2,000, add $1.50 for each $500 or fraction thereof, up to a maximum of $5,000 per shipment.	
200	$0.85		
500	2.35		
1,000	3.85		
1,500	5.35		
2,000	6.85	$5,000 max.	$15.85

Articles Admitted	Required Customs Form/Endorsement
Correspondence, business papers, computer data, and advertising material.	PS Form 2976, *Customs — CN 22 and Sender's Declaration.* Endorse item clearly next to mailing label as BUSINESS PAPERS.
Merchandise samples without commercial value.	PS Form 2976, *Customs — CN 22 and Sender's Declaration.*
Merchandise and all articles subject to customs duty.	PS Form 2976-A, *Customs Declaration and Dispatch Note CP 72,* inside a PS Form 2976-E, *Customs Declaration Envelope CP 91.*A commercial invoice must be enclosed in the item.

Size Limits (221.52)

Maximum length: 36 inches
Maximum length and girth combined: 79 inches

Note:
Coins; banknotes; currency notes, including paper money; securities of any kind payable to bearer; traveler's checks; platinum, gold, and silver; precious stones; jewelry; watches; and other valuable articles are prohibited in Express Mail International shipments to Poland.

Reciprocal Service Name: POCZTEX

Country Code: PL

Areas Served: All

Priority Mail International (230) Price Group 4

Refer to Notice 123, *Price List*, for the applicable retail, commercial base, or commercial plus price.
Weight Limit: 44 lbs.

Note: *Ordinary Priority Mail International includes indemnity at no cost based on weight. (See 230.)*

Priority Mail International — Flat Rate
Flat Rate Envelopes or Small Flat Rate Priced Boxes: The maximum weight is 4 pounds. Refer to Notice 123, *Price List*, for the applicable retail, commercial base, or commercial plus price.

Flat Rate Boxes — Medium and Large: The maximum weight is 20 pounds, or the limit set by the individual country, whichever is less. Refer to Notice 123, *Price List*, for the retail, commercial base, or commercial plus price.

Insurance (232.92)
Available for **Priority Mail International merchandise parcels** only (see 323.72 for markings)

Insured Amount not over	Fee	Insured Amount not over	Fee
$50	$2.45		
100	3.60	Add $1.15 for each additional $100 or fraction of insurance coverage.	
200	4.75		
300	5.90		
400	7.05		
500	8.20	$5,000 max.	$59.95

Size Limits (231.22)
Maximum length: 60 inches
Maximum length and girth combined: 108 inches

First-Class Mail International (240) Price Group 4
For the prices and maximum weights for letters, large envelopes (flats), packages (small packets), and postcards, see Notice 123, *Price List*.

Size Limits
Letters: See 241.212
Postcards: See 241.221
Large Envelopes (Flats): See 241.232
Packages (Small Packets): See 241.242 and 241.243

Airmail M-bags (260) — Direct Sack to One Addressee Price Group 4

Refer to Notice 123, *Price List*, for the applicable retail, commercial base, or commercial plus price.
Weight Limit: 66 lbs.

Matter for the Blind (270)
Free when sent as First-Class Mail International, including Priority Mail International Flat Rate Envelopes and Small Flat Rate Priced Boxes. Weight limit: 4 pounds.
Free when sent as Priority Mail International. Weight limit: 15 pounds.

Extra Services

Certificate of Mailing (313)

Individual Pieces	Fee
Individual article (PS Form 3817)	$1.15
Firm mailing books (PS Form 3877), per article listed (minimum 3)	0.44
Duplicate copy of PS Form 3817 or PS Form 3877 (per page)	1.15
Bulk Quantities	**Fee**
First 1,000 pieces (or fraction thereof)	$6.70
Each additional 1,000 pieces (or fraction thereof)	0.80
Duplicate copy of PS Form 3606	1.15

COD and Certified **NOT** for International Mail

International Business Reply Service (382)
Fee: Envelopes up to 2 ounces $1.50; Cards $1.00

International Postal Money Order (371)
NOT Available

International Reply Coupons (381) **Fee:** $2.20

Registered Mail (330) **Fee:** $11.75
Maximum Indemnity: $47.33
Available for First-Class Mail International, including postcards and Flat Rate Envelopes and Small Flat Rate Priced Boxes, and matter for the blind or other physically handicapped persons. Not applicable to M-bags.

Restricted Delivery (350) NOT Available

Return Receipt (340) **Fee:** $2.35
Available for registered mail and insured Priority Mail International parcels only.

Portugal
(Includes Azores and Madeira Islands)

Country Conditions for Mailing

Prohibitions (130)
Arms and weapons.
Cigarette lighters and refills containing butane gas.
Coins; banknotes; traveler's checks; currency notes (paper money); securities payable to bearer; platinum, gold, or silver, (manufactured or not); precious stones; jewelry; and other valuable articles. Banknotes will be permitted if the addressee has a license issued by the Bank of Portugal.
Human remains.
Live plants and animals.
Lottery tickets and advertisements concerning lotteries.
Tobacco.

Restrictions
Import permits must be obtained for shipments regarded by the Portuguese authorities as commercial shipments.
Medicaments require the authorization of the Director General of Health of Portugal.

Observations
1. A parcel may be addressed to a street address or to a post office box. A local telephone number for the addressee should be provided when the item is addressed to a street address and must be provided when the item is addressed to a post office box.
2. For parcels, an invoice, in duplicate, is required for all commercial shipments regardless of value and all personal shipments valued at $300 or more. The invoices must be affixed to the outside of the parcel or may be enclosed in PS Form 2976-E with the customs declaration.

Customs Forms Required (123)
First-Class Mail International items and Priority Mail International Flat Rate Envelopes and Small Flat Rate Priced Boxes:
PS Form 2976 (see 123.61)
Priority Mail International parcels:
PS Form 2976-A inside 2976-E (envelope)

Global Express Guaranteed (210) Price Group 5

Refer to Notice 123, *Price List*, for the applicable retail, commercial base, or commercial plus price.
Weight Limit: 70 lbs.

Insurance (212.5)

Insured Amount not over	Fee	Insured Amount not over	Fee
$100	No Fee	For document reconstruction insurance or non-document insurance coverage above $800, add $1.00 per $100 or fraction thereof, up to a maximum of $2,499 per shipment.	
200	$1.00		
300	2.00		
400	3.00		
500	4.00		
600	5.00		
700	6.00		
800	7.00	$2,499 max.	$24.00

Value Limit (212.1)
The maximum value of a GXG shipment to this country is $2,499 or a lesser amount if limited by content or value.

Size Limits (211.22)
The surface area of the address side of the item to be mailed must be large enough to completely contain the Global Express Guaranteed Air Waybill/Shipping Invoice (shipping label), postage, endorsement, and any applicable markings. The shipping label is approximately 5.5 inches high and 9.5 inches long.
Maximum length: 46 inches
Maximum width: 35 inches
Maximum height: 46 inches
Maximum length and girth combined: 108 inches

General Conditions for Mailing
See Publication 141, *Global Express Guaranteed Service Guide,* for information about areas served in the destination country, allowable contents, packaging and labeling requirements, tracking and tracing, service standards, and other conditions for mailing.

Express Mail International (220) Price Group 5

Refer to Notice 123, *Price List*, for the applicable retail, commercial base, or commercial plus price.
Weight Limit: 66 lbs.

Express Mail International — Flat Rate Envelope and Flat Rate Boxes
The maximum weight for the Express Mail International Flat Rate Envelope and the Express Mail International Flat Rate Boxes is 20 pounds. Refer to Notice 123, *Price List*, for the applicable retail, commercial base, or commercial plus price.

Insurance (222.8)
Available for **Express Mail International merchandise shipments** only

Insured Amount not over	Fee
$100	No Fee
200	$0.85
500	2.35
650 max.	3.85

Articles Admitted	Required Customs Form/Endorsement
Business papers.	PS Form 2976, *Customs — CN 22 and Sender's Declaration.* Endorse item clearly next to mailing label as BUSINESS PAPERS.
Merchandise samples without commercial value and computer data.	PS Form 2976, *Customs — CN 22 and Sender's Declaration.*
Merchandise, advertising materials, and all articles subject to customs duty.	PS Form 2976-A, *Customs Declaration and Dispatch Note CP 72,* inside a PS Form 2976-E, *Customs Declaration Envelope CP 91.* A commercial invoice should be included wih all commercial shipments.

Size Limits (221.52)
Maximum length: 60 inches
Maximum length and girth combined: 108 inches

Note:
Coins; banknotes; currency notes, including paper money; securities of any kind payable to bearer; traveler's checks; platinum, gold, and silver; precious stones; jewelry; watches; and other valuable articles are prohibited in Express Mail International shipments to Portugal (including Azores and Madeira Islands).

Reciprocal Service Name: There is no reciprocal service.

Country Code: PT

Areas Served:
All locations in Portugal and the following locations in the Azores and Madeira Islands:

City	Postal Code
Angra do Heroismo (Azores)	9700
Funchal (Madeira)	9000
Horta (Azores)	9900
Ponta Delgada (Azores)	9500

Priority Mail International (230) Price Group 5

Refer to Notice 123, *Price List*, for the applicable retail, commercial base, or commercial plus price.
Weight Limit: 66 lbs.

Note: *Ordinary Priority Mail International includes indemnity at no cost based on weight. (See 230.)*

Priority Mail International — Flat Rate
Flat Rate Envelopes or Small Flat Rate Priced Boxes: The maximum weight is 4 pounds. Refer to Notice 123, *Price List*, for the applicable retail, commercial base, or commercial plus price.

Flat Rate Boxes — Medium and Large: The maximum weight is 20 pounds, or the limit set by the individual country, whichever is less. Refer to Notice 123, *Price List*, for the retail, commercial base, or commercial plus price.

Insurance (232.92)
Available for **Priority Mail International merchandise parcels** only (see 323.72 for markings)

Insured Amount not over	Fee
$50	$2.45
100	3.60
200	4.75
300	5.90
400	7.05
500	8.20
600	9.35
650 max.	10.50

Size Limits (231.22)
Maximum length: 60 inches
Maximum length and girth combined: 108 inches

First-Class Mail International (240) Price Group 5
For the prices and maximum weights for letters, large envelopes (flats), packages (small packets), and postcards, see Notice 123, *Price List*.

Size Limits
Letters: See 241.212
Postcards: See 241.221
Large Envelopes (Flats): See 241.232
Packages (Small Packets): See 241.242 and 241.243

Airmail M-bags (260) — Direct Sack to One Addressee Price Group 5

Refer to Notice 123, *Price List*, for the applicable retail, commercial base, or commercial plus price.
Weight Limit: 66 lbs.

Matter for the Blind (270)
Free when sent as First-Class Mail International, including Priority Mail International Flat Rate Envelopes and Small Flat Rate Priced Boxes. Weight limit: 4 pounds.
Free when sent as Priority Mail International. Weight limit: 15 pounds.

Extra Services

Certificate of Mailing (313)

Individual Pieces	Fee
Individual article (PS Form 3817)	$1.15
Firm mailing books (PS Form 3877), per article listed (minimum 3)	0.44
Duplicate copy of PS Form 3817 or PS Form 3877 (per page)	1.15
Bulk Quantities	**Fee**
First 1,000 pieces (or fraction thereof)	$6.70
Each additional 1,000 pieces (or fraction thereof)	0.80
Duplicate copy of PS Form 3606	1.15

COD and Certified **NOT** for International Mail

International Business Reply Service (382)
Fee: Envelopes up to 2 ounces $1.50; Cards $1.00

International Postal Money Order (371)
NOT Available

International Reply Coupons (381) **Fee:** $2.20

Registered Mail (330) **Fee:** $11.75
Maximum Indemnity: $47.33
Available for First-Class Mail International, including postcards and Flat Rate Envelopes and Small Flat Rate Priced Boxes, and matter for the blind or other physically handicapped persons. Not applicable to M-bags.

Restricted Delivery (350) **Fee:** $4.55
Available for registered mail with a return receipt.
Endorsements: A remettre en main propre.

Return Receipt (340) **Fee:** $2.35
Available for registered mail and insured Priority Mail International parcels only.

Qatar

Country Conditions for Mailing

Prohibitions (130)
Alcoholic beverages of all kinds.
Ammunition.
Inflammable, explosive, or dangerous substances.
Liquids of any type.
Obscene or immoral articles.
Ordinary items containing coins; banknotes; currency notes or any security payable to the bearer; traveler's checks; platinum, silver, precious stones, jewels, or any precious articles.
Perishable infectious biological substances.
Radioactive materials.
Weapons or parts of weapons.

Restrictions
No list furnished.

Observations
None

Customs Forms Required (123)
First-Class Mail International items and Priority Mail International Flat Rate Envelopes and Small Flat Rate Priced Boxes:
PS Form 2976 (see 123.61)
Priority Mail International parcels:
PS Form 2976-A inside 2976-E (envelope)

Global Express Guaranteed (210) Price Group 6

Refer to Notice 123, *Price List*, for the applicable retail, commercial base, or commercial plus price.
Weight Limit: 70 lbs.

Insurance (212.5)

Insured Amount not over	Fee	Insured Amount not over	Fee
$100	No Fee	For document reconstruction insurance or non-document insurance coverage above $800, add $1.00 per $100 or fraction thereof, up to a maximum of $2,499 per shipment.	
200	$1.00		
300	2.00		
400	3.00		
500	4.00		
600	5.00		
700	6.00		
800	7.00	$2,499 max.	$24.00

Value Limit (212.1)
The maximum value of a GXG shipment to this country is $2,499 or a lesser amount if limited by content or value.

Size Limits (211.22)
The surface area of the address side of the item to be mailed must be large enough to completely contain the Global Express Guaranteed Air Waybill/Shipping Invoice (shipping label), postage, endorsement, and any applicable markings. The shipping label is approximately 5.5 inches high and 9.5 inches long.
Maximum length: 46 inches
Maximum width: 35 inches
Maximum height: 46 inches
Maximum length and girth combined: 108 inches

General Conditions for Mailing
See Publication 141, *Global Express Guaranteed Service Guide,* for information about areas served in the destination country, allowable contents, packaging and labeling requirements, tracking and tracing, service standards, and other conditions for mailing.

Express Mail International (220) Price Group 8

Refer to Notice 123, *Price List*, for the applicable retail, commercial base, or commercial plus price.
Weight Limit: 66 lbs.

Express Mail International — Flat Rate Envelope and Flat Rate Boxes
The maximum weight for the Express Mail International Flat Rate Envelope and the Express Mail International Flat Rate Boxes is 20 pounds. Refer to Notice 123, *Price List*, for the applicable retail, commercial base, or commercial plus price.

Insurance (222.8)
Available for **Express Mail International merchandise shipments** only

Insured Amount not over	Fee	Insured Amount not over	Fee
$100	No Fee	For insurance coverage above $2,000, add $1.50 for each $500 or fraction thereof, up to a maximum of $5,000 per shipment.	
200	$0.85		
500	2.35		
1,000	3.85		
1,500	5.35		
2,000	6.85	$5,000 max.	$15.85

Articles Admitted	Required Customs Form/Endorsement
Business correspondence, commercial papers, and documents.	No form required. Endorse item clearly next to mailing label as BUSINESS PAPERS.
Merchandise samples without commercial value.	PS Form 2976, *Customs — CN 22 and Sender's Declaration.*
Merchandise and all articles subject to customs duty.	PS Form 2976-A, *Customs Declaration and Dispatch Note CP 72,* inside a PS Form 2976-E, *Customs Declaration Envelope CP 91.*

Size Limits (221.52)
Maximum length: 36 inches
Maximum length and girth combined: 79 inches

Note:
Coins; banknotes; currency notes, including paper money; securities of any kind payable to bearer; traveler's checks; platinum, gold, and silver; precious stones; jewelry; watches; and other valuable articles are prohibited in Express Mail International shipments to Qatar.

Reciprocal Service Name: Mumtaz Post

Country Code: QA

Areas Served: All

Priority Mail International (230) Price Group 8

Refer to Notice 123, *Price List*, for the applicable retail, commercial base, or commercial plus price.
Weight Limit: 70 lbs.

Note: *Ordinary Priority Mail International includes indemnity at no cost based on weight. (See 230.)*

Priority Mail International — Flat Rate

Flat Rate Envelopes or Small Flat Rate Priced Boxes: The maximum weight is 4 pounds. Refer to Notice 123, *Price List*, for the applicable retail, commercial base, or commercial plus price.

Flat Rate Boxes — Medium and Large: The maximum weight is 20 pounds, or the limit set by the individual country, whichever is less. Refer to Notice 123, *Price List*, for the retail, commercial base, or commercial plus price.

Insurance (232.92) NOT Available

Size Limits (231.22)

Maximum length: 42 inches
Maximum length and girth combined: 79 inches

First-Class Mail International (240) Price Group 8

For the prices and maximum weights for letters, large envelopes (flats), packages (small packets), and postcards, see Notice 123, *Price List*.

Size Limits

Letters: See 241.212
Postcards: See 241.221
Large Envelopes (Flats): See 241.232
Packages (Small Packets): See 241.242 and 241.243

Airmail M-bags (260) — Direct Sack to One Addressee Price Group 8

Refer to Notice 123, *Price List*, for the applicable retail, commercial base, or commercial plus price.
Weight Limit: 66 lbs.

Matter for the Blind (270) NOT Available

Extra Services

Certificate of Mailing (313)

Individual Pieces	Fee
Individual article (PS Form 3817)	$1.15
Firm mailing books (PS Form 3877), per article listed (minimum 3)	0.44
Duplicate copy of PS Form 3817 or PS Form 3877 (per page)	1.15
Bulk Quantities	**Fee**
First 1,000 pieces (or fraction thereof)	$6.70
Each additional 1,000 pieces (or fraction thereof)	0.80
Duplicate copy of PS Form 3606	1.15

COD and Certified **NOT** for International Mail

International Business Reply Service (382)

Fee: Envelopes up to 2 ounces $1.50; Cards $1.00

International Postal Money Order (371)

NOT Available

International Reply Coupons (381) **Fee:** $2.20

Registered Mail (330) **Fee:** $11.75

Maximum Indemnity: $47.33
Available for First-Class Mail International, including postcards and Flat Rate Envelopes and Small Flat Rate Priced Boxes, and matter for the blind or other physically handicapped persons. Not applicable to M-bags.

Restricted Delivery (350) **Fee:** $4.55

Available for registered mail with a return receipt.
Endorsements: A remettre en main propre.

Return Receipt (340) **Fee:** $2.35

Available for registered mail only.

Reunion

Country Conditions for Mailing

Prohibitions (130)
Coins; platinum, gold, and silver (manufactured or not); precious stones; jewelry; and other valuable articles.
Perishable infectious biological substances.
Perishable noninfectious biological substances.
Radioactive materials.
Otherwise, same as for France.

Restrictions
Banknotes; currency notes; and securities payable to bearer may only be sent in registered First-Class Mail International shipments.
Same as for France.

Observations
None

Customs Forms Required (123)
First-Class Mail International items and Priority Mail International Flat Rate Envelopes and Small Flat Rate Priced Boxes:
PS Form 2976 (see 123.61)
Priority Mail International parcels:
PS Form 2976-A inside 2976-E (envelope)

Global Express Guaranteed (210) Price Group 4

Refer to Notice 123, *Price List*, for the applicable retail, commercial base, or commercial plus price.
Weight Limit: 70 lbs.

Insurance (212.5)

Insured Amount not over	Fee	Insured Amount not over	Fee
$100	No Fee	For document reconstruction insurance or non-document insurance coverage above $800, add $1.00 per $100 or fraction thereof, up to a maximum of $2,499 per shipment.	
200	$1.00		
300	2.00		
400	3.00		
500	4.00		
600	5.00		
700	6.00		
800	7.00	$2,499 max.	$24.00

Value Limit (212.1)
The maximum value of a GXG shipment to this country is $2,499 or a lesser amount if limited by content or value.

Size Limits (211.22)
The surface area of the address side of the item to be mailed must be large enough to completely contain the Global Express Guaranteed Air Waybill/Shipping Invoice (shipping label), postage, endorsement, and any applicable markings. The shipping label is approximately 5.5 inches high and 9.5 inches long.
Maximum length: 46 inches
Maximum width: 35 inches
Maximum height: 46 inches
Maximum length and girth combined: 108 inches

General Conditions for Mailing
See Publication 141, *Global Express Guaranteed Service Guide,* for information about areas served in the destination country, allowable contents, packaging and labeling requirements, tracking and tracing, service standards, and other conditions for mailing.

Express Mail International (220)
Not Available

Priority Mail International (230) Price Group 9

Refer to Notice 123, *Price List*, for the applicable retail, commercial base, or commercial plus price.
Weight Limit: 66 lbs.

Note: *Ordinary Priority Mail International includes indemnity at no cost based on weight. (See 230.)*

Priority Mail International — Flat Rate
Flat Rate Envelopes or Small Flat Rate Priced Boxes: The maximum weight is 4 pounds. Refer to Notice 123, *Price List*, for the applicable retail, commercial base, or commercial plus price.

Flat Rate Boxes — Medium and Large: The maximum weight is 20 pounds, or the limit set by the individual country, whichever is less. Refer to Notice 123, *Price List*, for the retail, commercial base, or commercial plus price.

Insurance (232.92)
Available for **Priority Mail International merchandise parcels** only (see 323.72 for markings)

Insured Amount not over	Fee	Insured Amount not over	Fee
$50	$2.45		
100	3.60	Add $1.15 for each additional $100 or fraction of insurance coverage.	
200	4.75		
300	5.90		
400	7.05		
500	8.20	$5,000 max.	$59.95

Size Limits (231.22)
Maximum length: 42 inches
Maximum length and girth combined: 79 inches

First-Class Mail International (240) Price Group 9
For the prices and maximum weights for letters, large envelopes (flats), packages (small packets), and postcards, see Notice 123, *Price List*.

Size Limits
Letters: See 241.212
Postcards: See 241.221
Large Envelopes (Flats): See 241.232
Packages (Small Packets): See 241.242 and 241.243

Airmail M-bags (260) — Direct Sack to One Addressee Price Group 9

Refer to Notice 123, *Price List*, for the applicable retail, commercial base, or commercial plus price.
Weight Limit: 66 lbs.

Matter for the Blind (270) NOT Available

Extra Services

Certificate of Mailing (313)

Individual Pieces	Fee
Individual article (PS Form 3817)	$1.15
Firm mailing books (PS Form 3877), per article listed (minimum 3)	0.44
Duplicate copy of PS Form 3817 or PS Form 3877 (per page)	1.15
Bulk Quantities	**Fee**
First 1,000 pieces (or fraction thereof)	$6.70
Each additional 1,000 pieces (or fraction thereof)	0.80
Duplicate copy of PS Form 3606	1.15

COD and Certified

NOT for International Mail

International Business Reply Service (382)

Fee: Envelopes up to 2 ounces $1.50; Cards $1.00

International Postal Money Order (371)

NOT Available

International Reply Coupons (381)

Fee: $2.20

Registered Mail (330)

Fee: $11.75

Maximum Indemnity: $47.33
Available for First-Class Mail International, including postcards and Flat Rate Envelopes and Small Flat Rate Priced Boxes, and matter for the blind or other physically handicapped persons. Not applicable to M-bags.

Restricted Delivery (350)

NOT Available

Return Receipt (340)

Fee: $2.35

Available for registered mail and insured Priority Mail International parcels only.

Romania

Country Conditions for Mailing

Prohibitions (130)

Arms, ammunitions, and parts and accessories thereof, except that hunting guns or similar guns belonging to legal persons are admitted with agreement of the Romanian police department.
Coins; bank notes; currency notes; or securities of any kind payable to bearer; traveler's checks; platinum, gold, or silver (whether manufactured or not), precious stones; jewelry; or other valuable articles.
Explosives, pyrotechnic products; matches, pyrophoric alloys, and combustible preparations.
Indecent or obscene books, cards, photographs, manuscripts, typescripts, or other products of the printing industry.
Perishable infectious biological substances.
Perishable noninfectious biological substances.
Radioactive materials.
Tobacco and manufactured tobacco substitutes.

Restrictions

Many items are admitted conditionally subject to permits or certificates (such as veterinary health or phytosanitary certificates for products of animal or vegetable origin) issued by the Romanian legal authorities.
Pharmaceutical products are admitted only with the agreement of the Ministry of Health.
Vitamins require a permit issued by the Ministry of Health or Ministry of Agriculture.

Observations

None

Customs Forms Required (123)

First-Class Mail International items and Priority Mail International Flat Rate Envelopes and Small Flat Rate Priced Boxes:
PS Form 2976 (see 123.61)
Priority Mail International parcels:
PS Form 2976-A inside 2976-E (envelope)

Global Express Guaranteed (210) Price Group 4

Refer to Notice 123, *Price List*, for the applicable retail, commercial base, or commercial plus price.
Weight Limit: 70 lbs.

Insurance (212.5)

Insured Amount not over	Fee	Insured Amount not over	Fee
$100	No Fee	For document reconstruction insurance or non-document insurance coverage above $800, add $1.00 per $100 or fraction thereof, up to a maximum of $2,499 per shipment.	
200	$1.00		
300	2.00		
400	3.00		
500	4.00		
600	5.00		
700	6.00		
800	7.00	$2,499 max.	$24.00

Value Limit (212.1)

The maximum value of a GXG shipment to this country is $2,499 or a lesser amount if limited by content or value.

Size Limits (211.22)

The surface area of the address side of the item to be mailed must be large enough to completely contain the Global Express Guaranteed Air Waybill/Shipping Invoice (shipping label), postage, endorsement, and any applicable markings. The shipping label is approximately 5.5 inches high and 9.5 inches long.
Maximum length: 46 inches
Maximum width: 35 inches
Maximum height: 46 inches
Maximum length and girth combined: 108 inches

General Conditions for Mailing

See Publication 141, *Global Express Guaranteed Service Guide,* for information about areas served in the destination country, allowable contents, packaging and labeling requirements, tracking and tracing, service standards, and other conditions for mailing.

Express Mail International (220) Price Group 4

Refer to Notice 123, *Price List*, for the applicable retail, commercial base, or commercial plus price.
Weight Limit: 70 lbs.

Express Mail International — Flat Rate Envelope and Flat Rate Boxes

The maximum weight for the Express Mail International Flat Rate Envelope and the Express Mail International Flat Rate Boxes is 20 pounds. Refer to Notice 123, *Price List*, for the applicable retail, commercial base, or commercial plus price.

Insurance (222.8)

Available for **Express Mail International merchandise shipments** only

Insured Amount not over	Fee	Insured Amount not over	Fee
$100	No Fee	For insurance coverage above $2,000, add $1.50 for each $500 or fraction thereof, up to a maximum of $5,000 per shipment.	
200	$0.85		
500	2.35		
1,000	3.85		
1,500	5.35		
2,000	6.85	$5,000 max.	$15.85

Articles Admitted	Required Customs Form/Endorsement
Correspondence and business papers.	Two copies of PS Form 2976, *Customs — CN 22 and Sender's Declaration.* Endorse item clearly next to mailing label as DES DOCUMENTS COMMERCIAL (COMMERCIAL DOCUMENTS).
Merchandise samples without commercial value.	PS Form 2976, *Customs — CN 22 and Sender's Declaration.* Endorse item clearly next to mailing label as SAMPLES.
Merchandise and all articles subject to customs duty.	PS Form 2976-A, *Customs Declaration and Dispatch Note CP 72,* inside a PS Form 2976-E, *Customs Declaration Envelope CP 91.*

Size Limits (221.52)

Maximum length: 36 inches
Maximum length and girth combined: 79 inches

Note:
Coins; banknotes; currency notes, including paper money; securities of any kind payable to bearer; traveler's checks; platinum, gold, and silver; precious stones; jewelry; watches; and other valuable articles are prohibited in Express Mail International shipments to Romania.

Reciprocal Service Name: Rapide Post/EMS

Country Code: RO

Areas Served: All

Priority Mail International (230) Price Group 4

Refer to Notice 123, *Price List*, for the applicable retail, commercial base, or commercial plus price.
Weight Limit: 70 lbs.

Note: *Ordinary Priority Mail International includes indemnity at no cost based on weight. (See 230.)*

Priority Mail International — Flat Rate
Flat Rate Envelopes or Small Flat Rate Priced Boxes: The maximum weight is 4 pounds. Refer to Notice 123, *Price List*, for the applicable retail, commercial base, or commercial plus price.

Flat Rate Boxes — Medium and Large: The maximum weight is 20 pounds, or the limit set by the individual country, whichever is less. Refer to Notice 123, *Price List*, for the retail, commercial base, or commercial plus price.

Insurance (232.92)
Available for **Priority Mail International merchandise parcels** only (see 323.72 for markings)

Insured Amount not over	Fee	Insured Amount not over	Fee
$50	$2.45		
100	3.60	Add $1.15 for each additional $100 or fraction of insurance coverage.	
200	4.75		
300	5.90		
400	7.05		
500	8.20	$5,000 max.	$59.95

Size Limits (231.22)
Maximum length: 42 inches
Maximum length and girth combined: 79 inches

First-Class Mail International (240) Price Group 4
For the prices and maximum weights for letters, large envelopes (flats), packages (small packets), and postcards, see Notice 123, *Price List*.

Size Limits
Letters: See 241.212
Postcards: See 241.221
Large Envelopes (Flats): See 241.232
Packages (Small Packets): See 241.242 and 241.243

Airmail M-bags (260) — Direct Sack to One Addressee Price Group 4

Refer to Notice 123, *Price List*, for the applicable retail, commercial base, or commercial plus price.
Weight Limit: 66 lbs.

Matter for the Blind (270)
Free when sent as First-Class Mail International, including Priority Mail International Flat Rate Envelopes and Small Flat Rate Priced Boxes. Weight limit: 4 pounds.
Free when sent as Priority Mail International. Weight limit: 15 pounds.

Extra Services

Certificate of Mailing (313)

Individual Pieces	Fee
Individual article (PS Form 3817)	$1.15
Firm mailing books (PS Form 3877), per article listed (minimum 3)	0.44
Duplicate copy of PS Form 3817 or PS Form 3877 (per page)	1.15
Bulk Quantities	**Fee**
First 1,000 pieces (or fraction thereof)	$6.70
Each additional 1,000 pieces (or fraction thereof)	0.80
Duplicate copy of PS Form 3606	1.15

COD and Certified **NOT** for International Mail

International Business Reply Service (382)
Fee: Envelopes up to 2 ounces $1.50; Cards $1.00

International Postal Money Order (371)
NOT Available

International Reply Coupons (381) **Fee:** $2.20

Registered Mail (330) **Fee:** $11.75
Maximum Indemnity: $47.33
Available for First-Class Mail International, including postcards and Flat Rate Envelopes and Small Flat Rate Priced Boxes, and matter for the blind or other physically handicapped persons. Not applicable to M-bags.

Restricted Delivery (350) NOT Available

Return Receipt (340) **Fee:** $2.35
Available for registered mail and insured Priority Mail International parcels only.

Russia
Russian Federation

Country Conditions for Mailing

Prohibitions (130)

Chemical substance dangerous to human life, animals, and birds and designed to combat microbes, diseases, and plants.
Color copiers.
Cultural artifacts.
Currency of the Russian Federation; checks and other currencies for the Bank of External Trade and of the Bank for External Economic Affairs of the Russian Federation; securities payable to bearer; State bonds; and lottery tickets of the Russian Federation.
Electric fishing systems and equipment consisting of electric signal generators with connected conductors and accumulators (batteries), employed together to fish biological aquatic resources using electric current.
Explosives, pyrotechnic products, matches, pyrophoric alloys, combustible preparations.
Firearms of all kinds, including parts thereof, ammunition, swords, cutlasses, bayonets, lances, and similar arms.
Honey, pollen, wax, and honeycombs.
Human organs and/or substances, and blood and blood parts.
Implements for fishing aquatic biological resources.
Knotted fishing nets made from synthetic monofilaments or other polyamides, with a filament diameter less than 0.5 mm and mesh size less than 100 mm (length of mesh at one side less than 50 mm).
Live animals (see exception for bees, leeches, and silkworms in the Restrictions list).
Narcotics, psychotropic substances, and precursors, including in drug form.
Ozone depleting substances.
Pathogenic or potentially pathogenic organisms.
Perishable items.
Plant-protection products subject to the provisions of Annexes A and B to the Stockholm Convention on Persistent Organic Pollutants of May 22, 2001.
Plants of any kind and in any form, including seeds.
Precious stones of any kind or natural diamonds, except for jewelry.
Printed books, newspapers, pictures and other products of the printing industry, manuscripts, and miscellaneous documents containing information that could be detrimental to State security, social order, public morals, property rights, including intellectual property and other interests of natural and legal persons.
Printed or audiovisual materials that are manufactured or distributed in violation of the legal requirements on elections and referenda in member countries of the Eurasian Economic Community Customs Union.
Radioactive materials.
The following articles are prohibited when sent to the address of private individuals or sent by private individuals for needs that are not related to company activities:
- Scrap and waste from ferrous and non-ferrous metals.
- Nonmanufactured precious metals, precious metal scrap and waste, ores and concentrated precious metal products, and primary products containing precious metals.
- Mineral substances (nonmanufactured natural stones).
- Information about subsoils.

Tobacco products or smoking mixtures of any kind.
Transmitters and transceivers of any power, except Panasonic radiotelephones, models KX-T7980, KX-T9000, KT-T9050, and KX-T90890.
Undeveloped photosensitive products.
Weapons of any kind, and parts thereof.

Restrictions

Bank notes in circulation, securities of any kind payable to bearer, or foreign currency may be mailed only as insured Priority Mail International parcels. Russia will not accept liability in cases of loss or damage to such items if they are accepted.
Medicaments and preparations with added vitamins are admitted with the authorization of the Ministry of Public Health of the Russian Federation.
Printed or audiovisual materials are prohibited if any of the following apply:
- They propagate extremist or terrorist activities or publicly justify terrorism.
- They are of a pornographic nature.
- They are intended to spread propaganda containing Nazi ideas or symbols, or ideas or symbols that might be confused with those of Nazi ideology.
- They contain information that could be prejudicial to the political and economic interests of Russia, to public safety, or to the health and morality of its citizens.

The following items may be sent only when used for personal use subject to appropriate permission from the Russian national controlling authority:
- Encrypting and encoding devices used for coding (encryption).
- High-frequency apparatuses.
- Bees, leeches, and silkworms accompanied by a veterinary certificate.

Observations

Articles or parts therefor imported for repair or replacement are exempt from customs duty if the sender's written declaration is included in the postal item.
Articles prohibited as imports into Russia and falsely indicated or not indicated at all on the customs declaration are confiscated.
If prohibited articles are sent, one of the following measures is taken:
- Seizure of the prohibited articles only, the rest delivered to the addressee.
- Return of the item to the country of origin.
- Seizure of the whole item.

Inherited goods from abroad are admitted and are exempt from customs duties on the basis of certificates issued by consulates of the Russian Federation abroad on the basis of the law of inheritance and the composition of the legacy.
It is prohibited to import into Russia postal items from commercial companies intended for private individuals permanently resident in Russia with the exception of legacies as well as articles admitted for repairs or replacement. However, licensed parcels from private parcel companies that have entered into a contract with VO "Vnieshintorg" are admitted. All dispatch formalities must be complied with in accordance with the current regulations in the Russian Federation.
Items containing articles admitted as imports are delivered to addressees subject to payment of customs duties at the rate of 30% of the cost of the articles:
- If the cost of the contents is between 101 USD and 1,000 USD.
- If the quantity of articles imported exceeds three times the limit according to the internal standards set.

Items containing articles admitted as imports the cost of which is between 1,001 USD and 10,000 USD are delivered to addressees subject to payment of the customs duties at the rate of 50% of the cost of the articles.

Items not intended for the addressee's personal use are understood to be items sent systematically in bulk even if they have different addresses and the regulation limit of the articles is complied with for each item separately. Such items are returned to the country of origin.

Customs Forms Required (123)

First-Class Mail International items and Priority Mail International Flat Rate Envelopes and Small Flat Rate Priced Boxes:
PS Form 2976 (see 123.61)
Priority Mail International parcels:
PS Form 2976-A inside 2976-E (envelope)

Global Express Guaranteed (210) Price Group 4

Refer to Notice 123, *Price List*, for the applicable retail, commercial base, or commercial plus price.
Weight Limit: 70 lbs.

Insurance (212.5)

Insured Amount not over	Fee	Insured Amount not over	Fee
$100	No Fee	For document reconstruction insurance or non-document insurance coverage above $800, add $1.00 per $100 or fraction thereof, up to a maximum of $2,499 per shipment.	
200	$1.00		
300	2.00		
400	3.00		
500	4.00		
600	5.00		
700	6.00		
800	7.00	$2,499 max.	$24.00

Value Limit (212.1)

The maximum value of a GXG shipment to this country is $2,499 or a lesser amount if limited by content or value.

Size Limits (211.22)

The surface area of the address side of the item to be mailed must be large enough to completely contain the Global Express Guaranteed Air Waybill/Shipping Invoice (shipping label), postage, endorsement, and any applicable markings. The shipping label is approximately 5.5 inches high and 9.5 inches long.
Maximum length: 46 inches
Maximum width: 35 inches
Maximum height: 46 inches
Maximum length and girth combined: 108 inches

General Conditions for Mailing

See Publication 141, *Global Express Guaranteed Service Guide,* for information about areas served in the destination country, allowable contents, packaging and labeling requirements, tracking and tracing, service standards, and other conditions for mailing.

Express Mail International (220) Price Group 4

Refer to Notice 123, *Price List*, for the applicable retail, commercial base, or commercial plus price.
Weight Limit: 70 lbs.

Express Mail International — Flat Rate Envelope and Flat Rate Boxes

The maximum weight for the Express Mail International Flat Rate Envelope and the Express Mail International Flat Rate Boxes is 20 pounds. Refer to Notice 123, *Price List*, for the applicable retail, commercial base, or commercial plus price.

Insurance (222.8)

Available for **Express Mail International merchandise shipments** only

Insured Amount not over	Fee	Insured Amount not over	Fee
$100	No Fee	For insurance coverage above $2,000, add $1.50 for each $500 or fraction thereof, up to a maximum of $5,000 per shipment.	
200	$0.85		
500	2.35		
1,000	3.85		
1,500	5.35		
2,000	6.85	$5,000 max.	$15.85

Articles Admitted	Required Customs Form/Endorsement
Correspondence, business papers, and documents.	PS Form 2976, *Customs — CN 22 and Sender's Declaration.* Endorse item clearly next to mailing label as BUSINESS PAPERS.
Merchandise samples without commercial value.	PS Form 2976-A, *Customs Declaration and Dispatch Note CP 72,* inside a PS Form 2976-E, *Customs Declaration Envelope CP 91.*
Merchandise and all articles subject to customs duty.	PS Form 2976-A, *Customs Declaration and Dispatch Note CP 72,* inside a PS Form 2976-E, *Customs Declaration Envelope CP 91.*

Size Limits (221.52)

Maximum length: 60 inches
Maximum length and girth combined: 108 inches

Notes:

1. Addressees are required to obtain import licenses/permits to receive most goods.
2. Coins; banknotes; currency notes, including paper money; securities of any kind payable to bearer; traveler's checks; platinum, gold, and silver; precious stones; jewelry; watches; and other valuable articles are prohibited in Express Mail International shipments to Russia.

Reciprocal Service Name: EMS

Country Code: RU

Areas Served: All except Chaibucha, Yamsk, Garmanda, Gizhiga, Rep de Tchetchnya, Tachtoyamsk, and Verchniyi paren.

Priority Mail International (230) Price Group 4

Refer to Notice 123, *Price List*, for the applicable retail, commercial base, or commercial plus price.
Weight Limit: 44 lbs.

Note: *Ordinary Priority Mail International includes indemnity at no cost based on weight. (See 230.)*

Priority Mail International — Flat Rate

Flat Rate Envelopes or Small Flat Rate Priced Boxes: The maximum weight is 4 pounds. Refer to Notice 123, *Price List*, for the applicable retail, commercial base, or commercial plus price.

Flat Rate Boxes — Medium and Large: The maximum weight is 20 pounds, or the limit set by the individual country, whichever is less. Refer to Notice 123, *Price List*, for the retail, commercial base, or commercial plus price.

Insurance (232.92)
Available for **Priority Mail International merchandise parcels** only (see 323.72 for markings)

Insured Amount not over	Fee	Insured Amount not over	Fee
$50	$2.45		
100	3.60	Add $1.15 for each additional $100 or fraction of insurance coverage.	
200	4.75		
300	5.90		
400	7.05		
500	8.20	$5,000 max.	$59.95

Size Limits (231.22)
Maximum length: 42 inches
Maximum length and girth combined: 79 inches

First-Class Mail International (240) Price Group 4
For the prices and maximum weights for letters, large envelopes (flats), packages (small packets), and postcards, see Notice 123, *Price List*.

Size Limits
Letters: See 241.212
Postcards: See 241.221
Large Envelopes (Flats): See 241.232
Packages (Small Packets): See 241.242 and 241.243

Airmail M-bags (260) — Direct Sack to One Addressee Price Group 4

Refer to Notice 123, *Price List*, for the applicable retail, commercial base, or commercial plus price.
Weight Limit: 66 lbs.

Matter for the Blind (270)
Free when sent as First-Class Mail International, including Priority Mail International Flat Rate Envelopes and Small Flat Rate Priced Boxes. Weight limit: 4 pounds.
Free when sent as Priority Mail International. Weight limit: 15 pounds.

Extra Services

Certificate of Mailing (313)

Individual Pieces	Fee
Individual article (PS Form 3817)	$1.15
Firm mailing books (PS Form 3877), per article listed (minimum 3)	0.44
Duplicate copy of PS Form 3817 or PS Form 3877 (per page)	1.15
Bulk Quantities	**Fee**
First 1,000 pieces (or fraction thereof)	$6.70
Each additional 1,000 pieces (or fraction thereof)	0.80
Duplicate copy of PS Form 3606	1.15

COD and Certified **NOT** for International Mail

International Business Reply Service (382)
Fee: Envelopes up to 2 ounces $1.50; Cards $1.00

International Postal Money Order (371)
NOT Available

International Reply Coupons (381) **Fee:** $2.20

Registered Mail (330) **Fee:** $11.75
Maximum Indemnity: $47.33
Available for First-Class Mail International, including postcards and Flat Rate Envelopes and Small Flat Rate Priced Boxes, and matter for the blind or other physically handicapped persons. Not applicable to M-bags.

Restricted Delivery (350) **Fee:** $4.55
Available for registered mail with a return receipt.
Endorsements: A remettre en main propre.

Return Receipt (340) **Fee:** $2.35
Available for registered mail and insured Priority Mail International parcels only.

Rwanda

Country Conditions for Mailing

Prohibitions (130)

Coins; banknotes; currency notes (paper money); traveler's checks; and securities payable to bearer except in registered First-Class Mail International shipments.
Perishable infectious biological substances.
Precious metals.
Radioactive materials.

Restrictions

Medicines are admitted provided the addressee has a permit issued by the Chief Pharmacist in Rwanda.

Observations

None

Customs Forms Required (123)

First-Class Mail International items and Priority Mail International Flat Rate Envelopes and Small Flat Rate Priced Boxes:
PS Form 2976 (see 123.61)
Priority Mail International parcels:
PS Form 2976-A inside 2976-E (envelope)

Global Express Guaranteed (210) Price Group 4

Refer to Notice 123, *Price List*, for the applicable retail, commercial base, or commercial plus price.

Weight Limit: 70 lbs.

Insurance (212.5)

Insured Amount not over	Fee	Insured Amount not over	Fee
$100	No Fee	For document reconstruction insurance or non-document insurance coverage above $800, add $1.00 per $100 or fraction thereof, up to a maximum of $1,000 per shipment.	
200	$1.00		
300	2.00		
400	3.00		
500	4.00		
600	5.00		
700	6.00		
800	7.00	$1,000 max.	$9.00

Value Limit (212.1)

The maximum value of a GXG shipment to Rwanda is $1,000 or a lesser amount if limited by content or value.

Size Limits (211.22)

The surface area of the address side of the item to be mailed must be large enough to completely contain the Global Express Guaranteed Air Waybill/Shipping Invoice (shipping label), postage, endorsement, and any applicable markings. The shipping label is approximately 5.5 inches high and 9.5 inches long.
Maximum length: 46 inches
Maximum width: 35 inches
Maximum height: 46 inches
Maximum length and girth combined: 108 inches

General Conditions for Mailing

See Publication 141, *Global Express Guaranteed Service Guide,* for information about areas served in the destination country, allowable contents, packaging and labeling requirements, tracking and tracing, service standards, and other conditions for mailing.

Express Mail International (220) Price Group 7

Refer to Notice 123, *Price List*, for the applicable retail, commercial base, or commercial plus price.

Weight Limit: 66 lbs.

Express Mail International — Flat Rate Envelope and Flat Rate Boxes

The maximum weight for the Express Mail International Flat Rate Envelope and the Express Mail International Flat Rate Boxes is 20 pounds. Refer to Notice 123, *Price List*, for the applicable retail, commercial base, or commercial plus price.

Insurance (222.8)

Available for **Express Mail International merchandise shipments** only

Insured Amount not over	Fee	Insured Amount not over	Fee
$100	No Fee	For insurance coverage above $2,000, add $1.50 for each $500 or fraction thereof, up to a maximum of $5,000 per shipment.	
200	$0.85		
500	2.35		
1,000	3.85		
1,500	5.35		
2,000	6.85	$5,000 max.	$15.85

Articles Admitted	Required Customs Form/Endorsement
Correspondence, business papers, and documents.	PS Form 2976, *Customs — CN 22 and Sender's Declaration.* Endorse item clearly next to mailing label as BUSINESS PAPERS.
Merchandise samples without commercial value.	PS Form 2976-A, *Customs Declaration and Dispatch Note CP 72,* inside a PS Form 2976-E, *Customs Declaration Envelope CP 91.*
Merchandise and all articles subject to customs duty.	PS Form 2976-A, *Customs Declaration and Dispatch Note CP 72,* inside a PS Form 2976-E, *Customs Declaration Envelope CP 91.*

Size Limits (221.52)

Maximum length: 36 inches
Maximum length and girth combined: 79 inches

Notes:

1. Two copies of the invoice must accompany all shipments containing merchandise.
2. Coins; banknotes; currency notes, including paper money; securities of any kind payable to bearer; traveler's checks; platinum, gold, and silver; precious stones; jewelry; watches; and other valuable articles are prohibited in Express Mail International shipments to Rwanda.

Reciprocal Service Name: EMS Rwanda Express

Country Code: RW

Areas Served:
Express Mail service is available to the following cities:

Butare	Kibungo
Byumba	Kibuye
Cyangugu	Kigali
Gikongoro	Nyabisindu
Gisenyi	Ruhengeri
Gitarama	Rwamagana

Priority Mail International (230) Price Group 7

Refer to Notice 123, *Price List*, for the applicable retail, commercial base, or commercial plus price.
Weight Limit: 66 lbs.

Note: *Ordinary Priority Mail International includes indemnity at no cost based on weight. (See 230.)*

Priority Mail International — Flat Rate
Flat Rate Envelopes or Small Flat Rate Priced Boxes: The maximum weight is 4 pounds. Refer to Notice 123, *Price List*, for the applicable retail, commercial base, or commercial plus price.

Flat Rate Boxes — Medium and Large: The maximum weight is 20 pounds, or the limit set by the individual country, whichever is less. Refer to Notice 123, *Price List*, for the retail, commercial base, or commercial plus price.

Insurance (232.92) NOT Available

Size Limits (231.22)
Maximum length: 42 inches
Maximum length and girth combined: 79 inches

First-Class Mail International (240) Price Group 7
For the prices and maximum weights for letters, large envelopes (flats), packages (small packets), and postcards, see Notice 123, *Price List*.

Size Limits
Letters: See 241.212
Postcards: See 241.221
Large Envelopes (Flats): See 241.232
Packages (Small Packets): See 241.242 and 241.243

Airmail M-bags (260) — Direct Sack to One Addressee Price Group 7

Refer to Notice 123, *Price List*, for the applicable retail, commercial base, or commercial plus price.
Weight Limit: 66 lbs.

Matter for the Blind (270)
Free when sent as First-Class Mail International, including Priority Mail International Flat Rate Envelopes and Small Flat Rate Priced Boxes. Weight limit: 4 pounds.
Free when sent as Priority Mail International. Weight limit: 15 pounds.

Extra Services

Certificate of Mailing (313)

Individual Pieces	**Fee**
Individual article (PS Form 3817)	$1.15
Firm mailing books (PS Form 3877), per article listed (minimum 3)	0.44
Duplicate copy of PS Form 3817 or PS Form 3877 (per page)	1.15
Bulk Quantities	**Fee**
First 1,000 pieces (or fraction thereof)	$6.70
Each additional 1,000 pieces (or fraction thereof)	0.80
Duplicate copy of PS Form 3606	1.15

COD and Certified **NOT** for International Mail

International Business Reply Service (382)
Fee: Envelopes up to 2 ounces $1.50; Cards $1.00

International Postal Money Order (371)
NOT Available

International Reply Coupons (381) **Fee:** $2.20

Registered Mail (330) **Fee:** $11.75
Maximum Indemnity: $47.33
Available for First-Class Mail International, including postcards and Flat Rate Envelopes and Small Flat Rate Priced Boxes, and matter for the blind or other physically handicapped persons. Not applicable to M-bags.

Restricted Delivery (350) NOT Available

Return Receipt (340) **Fee:** $2.35
Available for registered mail only.

Saint Christopher and Nevis

Country Conditions for Mailing

Prohibitions (130)
Radioactive materials.

Restrictions
No list furnished.

Observations
None

Customs Forms Required (123)
First-Class Mail International items and Priority Mail International Flat Rate Envelopes and Small Flat Rate Priced Boxes:
PS Form 2976 (see 123.61)
Priority Mail International parcels:
PS Form 2976-A inside 2976-E (envelope)

Global Express Guaranteed (210) Price Group 7

Refer to Notice 123, *Price List*, for the applicable retail, commercial base, or commercial plus price.
Weight Limit: 70 lbs.

Insurance (212.5)

Insured Amount not over	Fee	Insured Amount not over	Fee
$100	No Fee	For document reconstruction insurance or non-document insurance coverage above $800, add $1.00 per $100 or fraction thereof, up to a maximum of $2,499 per shipment.	
200	$1.00		
300	2.00		
400	3.00		
500	4.00		
600	5.00		
700	6.00		
800	7.00	$2,499 max.	$24.00

Value Limit (212.1)
The maximum value of a GXG shipment to this country is $2,499 or a lesser amount if limited by content or value.

Size Limits (211.22)
The surface area of the address side of the item to be mailed must be large enough to completely contain the Global Express Guaranteed Air Waybill/Shipping Invoice (shipping label), postage, endorsement, and any applicable markings. The shipping label is approximately 5.5 inches high and 9.5 inches long.
Maximum length: 46 inches
Maximum width: 35 inches
Maximum height: 46 inches
Maximum length and girth combined: 108 inches

General Conditions for Mailing
See Publication 141, *Global Express Guaranteed Service Guide,* for information about areas served in the destination country, allowable contents, packaging and labeling requirements, tracking and tracing, service standards, and other conditions for mailing.

Express Mail International (220) Price Group 9

Refer to Notice 123, *Price List*, for the applicable retail, commercial base, or commercial plus price.
Weight Limit: 66 lbs.

Express Mail International — Flat Rate Envelope and Flat Rate Boxes
The maximum weight for the Express Mail International Flat Rate Envelope and the Express Mail International Flat Rate Boxes is 20 pounds. Refer to Notice 123, *Price List*, for the applicable retail, commercial base, or commercial plus price.

Insurance (222.8)
Available for **Express Mail International merchandise shipments** only

Insured Amount not over	Fee	Insured Amount not over	Fee
$100	No Fee	For insurance coverage above $2,000, add $1.50 for each $500 or fraction thereof, up to a maximum of $5,000 per shipment.	
200	$0.85		
500	2.35		
1,000	3.85		
1,500	5.35		
2,000	6.85	$5,000 max.	$15.85

Articles Admitted	Required Customs Form/Endorsement
Business correspondence, commerical papers and documents.	PS Form 2976, *Customs — CN 22 and Sender's Declaration.* Endorse item clearly next to mailing label as BUSINESS PAPERS.
Merchandise samples without commercial value and not subject to customs duty.	PS Form 2976, *Customs — CN 22 and Sender's Declaration.*
Merchandise samples, gifts, computer data including computer cards, magnetic tape, microfilm, and microfiche.	PS Form 2976-A, *Customs Declaration and Dispatch Note CP 72,* inside a PS Form 2976-E, *Customs Declaration Envelope CP 91.*
Merchandise and all articles subject to customs duty.	PS Form 2976-A, *Customs Declaration and Dispatch Note CP 72,* inside a PS Form 2976-E, *Customs Declaration Envelope CP 91.* A commercial invoice must be attached to the outside of all commercial shipments.

Size Limits (221.52)
Maximum length: 36 inches
Maximum length and girth combined: 79 inches

Notes:

1. Items are delivered Monday through Saturday. There is no delivery on Sunday or on national holidays.
2. Postal employees must tell customers that there is no service guarantee on any Express Mail International item.
3. All items admissible in international mail to Saint Christopher and Nevis, including correspondence, business papers, and merchandise, are accepted in Express Mail International. See Prohibitions and Restrictions.
4. Coins; banknotes; currency notes, including paper money; securities of any kind payable to bearer; traveler's checks; platinum, gold, and silver; precious stones; jewelry; watches; and other valuable articles are prohibited in Express Mail International shipments to Saint Christopher and Nevis. All items prohibited in regular international mail are also prohibited in Express Mail International shipments to Saint Christopher and Nevis.

Reciprocal Service Name: EMS

Country Code: KN

Areas Served: Entire country, including Nevis.

Priority Mail International (230) Price Group 9

Refer to Notice 123, *Price List*, for the applicable retail, commercial base, or commercial plus price.
Weight Limit: 44 lbs.

Note: *Ordinary Priority Mail International includes indemnity at no cost based on weight. (See 230.)*

Priority Mail International — Flat Rate

Flat Rate Envelopes or Small Flat Rate Priced Boxes: The maximum weight is 4 pounds. Refer to Notice 123, *Price List*, for the applicable retail, commercial base, or commercial plus price.

Flat Rate Boxes — Medium and Large: The maximum weight is 20 pounds, or the limit set by the individual country, whichever is less. Refer to Notice 123, *Price List*, for the retail, commercial base, or commercial plus price.

Insurance (232.92)

Available for **Priority Mail International merchandise parcels** only (see 323.72 for markings)

Insured Amount not over	Fee
$50	$2.45
100	3.60
200	4.75
242 max.	5.90

Size Limits (231.22)

Maximum length: 42 inches
Maximum length and girth combined: 79 inches

First-Class Mail International (240) Price Group 9

For the prices and maximum weights for letters, large envelopes (flats), packages (small packets), and postcards, see Notice 123, *Price List*.

Size Limits

Letters: See 241.212
Postcards: See 241.221
Large Envelopes (Flats): See 241.232
Packages (Small Packets): See 241.242 and 241.243

Airmail M-bags (260) — Direct Sack to One Addressee Price Group 9

Refer to Notice 123, *Price List*, for the applicable retail, commercial base, or commercial plus price.
Weight Limit: 66 lbs.

Matter for the Blind (270)

Free when sent as First-Class Mail International, including Priority Mail International Flat Rate Envelopes and Small Flat Rate Priced Boxes. Weight limit: 4 pounds.
Free when sent as Priority Mail International. Weight limit: 15 pounds.

Extra Services

Certificate of Mailing (313)

Individual Pieces	Fee
Individual article (PS Form 3817)	$1.15
Firm mailing books (PS Form 3877), per article listed (minimum 3)	0.44
Duplicate copy of PS Form 3817 or PS Form 3877 (per page)	1.15
Bulk Quantities	**Fee**
First 1,000 pieces (or fraction thereof)	$6.70
Each additional 1,000 pieces (or fraction thereof)	0.80
Duplicate copy of PS Form 3606	1.15

COD and Certified

NOT for International Mail

International Business Reply Service (382)

Fee: Envelopes up to 2 ounces $1.50; Cards $1.00

International Postal Money Order (371)

Use MO Form MP1
Maximum Amount Available: $700 **Fee:** $4.45
Money Order Inquiry: **Fee:** $5.50

International Reply Coupons (381) **Fee:** $2.20

Registered Mail (330) **Fee:** $11.75

Maximum Indemnity: $47.33
Available for First-Class Mail International, including postcards and Flat Rate Envelopes and Small Flat Rate Priced Boxes, and matter for the blind or other physically handicapped persons. Not applicable to M-bags.

Restricted Delivery (350) NOT Available

Return Receipt (340) **Fee:** $2.35

Available for registered mail and insured Priority Mail International parcels only.

Saint Helena

Country Conditions for Mailing

Prohibitions (130)
No list furnished.

Restrictions
No list furnished.

Observations
None

Customs Forms Required (123)
First-Class Mail International items and Priority Mail International Flat Rate Envelopes and Small Flat Rate Priced Boxes:
PS Form 2976 (see 123.61)
Priority Mail International parcels:
PS Form 2976-A inside 2976-E (envelope)

Global Express Guaranteed (210)
Not Available

Express Mail International (220)
Not Available

Priority Mail International (230) Price Group 7

Refer to Notice 123, *Price List*, for the applicable retail, commercial base, or commercial plus price.
Weight Limit: 44 lbs.

Note: *Ordinary Priority Mail International includes indemnity at no cost based on weight. (See 230.)*

Priority Mail International — Flat Rate
Flat Rate Envelopes or Small Flat Rate Priced Boxes: The maximum weight is 4 pounds. Refer to Notice 123, *Price List*, for the applicable retail, commercial base, or commercial plus price.

Flat Rate Boxes — Medium and Large: The maximum weight is 20 pounds, or the limit set by the individual country, whichever is less. Refer to Notice 123, *Price List*, for the retail, commercial base, or commercial plus price.

Insurance (232.92)
Available for **Priority Mail International merchandise parcels** only (see 323.72 for markings)

Insured Amount not over	Fee
$50	$2.45
100	3.60
170 max.	4.75

Size Limits (231.22)
Maximum length: 42 inches
Maximum length and girth combined: 79 inches

First-Class Mail International (240) Price Group 7
For the prices and maximum weights for letters, large envelopes (flats), packages (small packets), and postcards, see Notice 123, *Price List*.

Size Limits
Letters: See 241.212
Postcards: See 241.221
Large Envelopes (Flats): See 241.232
Packages (Small Packets): See 241.242 and 241.243

Airmail M-bags (260) — Direct Sack to One Addressee Price Group 7

Refer to Notice 123, *Price List*, for the applicable retail, commercial base, or commercial plus price.
Weight Limit: 66 lbs.

Matter for the Blind (270)
Free when sent as First-Class Mail International, including Priority Mail International Flat Rate Envelopes and Small Flat Rate Priced Boxes. Weight limit: 4 pounds.
Free when sent as Priority Mail International. Weight limit: 15 pounds.

Extra Services

Certificate of Mailing (313)

Individual Pieces	Fee
Individual article (PS Form 3817)	$1.15
Firm mailing books (PS Form 3877), per article listed (minimum 3)	0.44
Duplicate copy of PS Form 3817 or PS Form 3877 (per page)	1.15
Bulk Quantities	**Fee**
First 1,000 pieces (or fraction thereof)	$6.70
Each additional 1,000 pieces (or fraction thereof)	0.80
Duplicate copy of PS Form 3606	1.15

COD and Certified
NOT for International Mail

International Business Reply Service (382)
Fee: Envelopes up to 2 ounces $1.50; Cards $1.00

International Postal Money Order (371)
NOT Available

International Reply Coupons (381)
Fee: $2.20

Registered Mail (330)
Fee: $11.75
Maximum Indemnity: $47.33
Available for First-Class Mail International, including postcards and Flat Rate Envelopes and Small Flat Rate Priced Boxes, and matter for the blind or other physically handicapped persons. Not applicable to M-bags.

Restricted Delivery (350)
NOT Available

Return Receipt (340)
Fee: $2.35
Available for registered mail and insured Priority Mail International parcels only.

Saint Lucia

Country Conditions for Mailing

Prohibitions (130)
Circulars and printed matter concerning lotteries; lottery tickets.
Currency.
Firearms and ammunition except under license from the Police Dept. (Saint Lucia).
Shaving brushes made in Japan.
Used clothing.

Restrictions
No list furnished.

Observations
None

Customs Forms Required (123)
First-Class Mail International items and Priority Mail International Flat Rate Envelopes and Small Flat Rate Priced Boxes:
PS Form 2976 (see 123.61)
Priority Mail International parcels:
PS Form 2976-A inside 2976-E (envelope)

Global Express Guaranteed (210) Price Group 7

Refer to Notice 123, *Price List*, for the applicable retail, commercial base, or commercial plus price.

Weight Limit: 70 lbs.

Insurance (212.5)

Insured Amount not over	Fee	Insured Amount not over	Fee
$100	No Fee	For document reconstruction insurance or non-document insurance coverage above $800, add $1.00 per $100 or fraction thereof, up to a maximum of $2,499 per shipment.	
200	$1.00		
300	2.00		
400	3.00		
500	4.00		
600	5.00		
700	6.00		
800	7.00	$2,499 max.	$24.00

Value Limit (212.1)
The maximum value of a GXG shipment to this country is $2,499 or a lesser amount if limited by content or value.

Size Limits (211.22)
The surface area of the address side of the item to be mailed must be large enough to completely contain the Global Express Guaranteed Air Waybill/Shipping Invoice (shipping label), postage, endorsement, and any applicable markings. The shipping label is approximately 5.5 inches high and 9.5 inches long.
Maximum length: 46 inches
Maximum width: 35 inches
Maximum height: 46 inches
Maximum length and girth combined: 108 inches

General Conditions for Mailing
See Publication 141, *Global Express Guaranteed Service Guide,* for information about areas served in the destination country, allowable contents, packaging and labeling requirements, tracking and tracing, service standards, and other conditions for mailing.

Express Mail International (220) Price Group 9

Refer to Notice 123, *Price List*, for the applicable retail, commercial base, or commercial plus price.

Weight Limit: 44 lbs.

Express Mail International — Flat Rate Envelope and Flat Rate Boxes
The maximum weight for the Express Mail International Flat Rate Envelope and the Express Mail International Flat Rate Boxes is 20 pounds. Refer to Notice 123, *Price List*, for the applicable retail, commercial base, or commercial plus price.

Insurance (222.8)
Available for **Express Mail International merchandise shipments** only

Insured Amount not over	Fee	Insured Amount not over	Fee
$100	No Fee	For insurance coverage above $2,000, add $1.50 for each $500 or fraction thereof, up to a maximum of $5,000 per shipment.	
200	$0.85		
500	2.35		
1,000	3.85		
1,500	5.35		
2,000	6.85	$5,000 max.	$15.85

Articles Admitted	Required Customs Form/Endorsement
Correspondence and business papers.	PS Form 2976, *Customs — CN 22 and Sender's Declaration.* Endorse item clearly next to mailing label as BUSINESS PAPERS.
Merchandise samples without commercial value.	PS Form 2976, *Customs — CN 22 and Sender's Declaration.*
Merchandise and all articles subject to customs duty.	PS Form 2976-A, *Customs Declaration and Dispatch Note CP 72,* inside a PS Form 2976-E, *Customs Declaration Envelope CP 91.* A commercial invoice must be included in each item.

Size Limits (221.52)
Maximum length: 36 inches
Maximum length and girth combined: 79 inches

Note:
Coins; banknotes; currency notes, including paper money; securities of any kind payable to bearer; traveler's checks; platinum, gold, and silver; precious stones; jewelry; watches; and other valuable articles are prohibited in Express Mail International shipments to Saint Lucia.

Reciprocal Service Name: EMS-Expedited Mail Service

Country Code: LC

Areas Served: All

Priority Mail International (230) Price Group 9

Refer to Notice 123, *Price List*, for the applicable retail, commercial base, or commercial plus price.

Weight Limit: 44 lbs.

Note: *Ordinary Priority Mail International includes indemnity at no cost based on weight. (See 230.)*

Priority Mail International — Flat Rate

Flat Rate Envelopes or Small Flat Rate Priced Boxes: The maximum weight is 4 pounds. Refer to Notice 123, *Price List*, for the applicable retail, commercial base, or commercial plus price.

Flat Rate Boxes — Medium and Large: The maximum weight is 20 pounds, or the limit set by the individual country, whichever is less. Refer to Notice 123, *Price List*, for the retail, commercial base, or commercial plus price.

Insurance (232.92) NOT Available

Size Limits (231.22)

Maximum length: 42 inches
Maximum length and girth combined: 79 inches

First-Class Mail International (240) Price Group 9

For the prices and maximum weights for letters, large envelopes (flats), packages (small packets), and postcards, see Notice 123, *Price List*.

Size Limits

Letters: See 241.212
Postcards: See 241.221
Large Envelopes (Flats): See 241.232
Packages (Small Packets): See 241.242 and 241.243

Airmail M-bags (260) — Direct Sack to One Addressee Price Group 9

Refer to Notice 123, *Price List*, for the applicable retail, commercial base, or commercial plus price.
Weight Limit: 66 lbs.

Matter for the Blind (270)

Free when sent as First-Class Mail International, including Priority Mail International Flat Rate Envelopes and Small Flat Rate Priced Boxes. Weight limit: 4 pounds.
Free when sent as Priority Mail International. Weight limit: 15 pounds.

Extra Services

Certificate of Mailing (313)

Individual Pieces	Fee
Individual article (PS Form 3817)	$1.15
Firm mailing books (PS Form 3877), per article listed (minimum 3)	0.44
Duplicate copy of PS Form 3817 or PS Form 3877 (per page)	1.15
Bulk Quantities	**Fee**
First 1,000 pieces (or fraction thereof)	$6.70
Each additional 1,000 pieces (or fraction thereof)	0.80
Duplicate copy of PS Form 3606	1.15

COD and Certified **NOT** for International Mail

International Business Reply Service (382)

Fee: Envelopes up to 2 ounces $1.50; Cards $1.00

International Postal Money Order (371)

Use MO Form MP1
Maximum Amount Available: $700 **Fee:** $4.45
Money Order Inquiry: **Fee:** $5.50

International Reply Coupons (381) **Fee:** $2.20

Registered Mail (330) **Fee:** $11.75

Maximum Indemnity: $47.33
Available for First-Class Mail International, including postcards and Flat Rate Envelopes and Small Flat Rate Priced Boxes, and matter for the blind or other physically handicapped persons. Not applicable to M-bags.

Restricted Delivery (350) NOT Available

Return Receipt (340) **Fee:** $2.35

Available for registered mail only.

Saint Pierre and Miquelon

Country Conditions for Mailing

Prohibitions (130)
Perishable infectious biological substances.
Perishable noninfectious biological substances.
Radioactive materials.

Restrictions
No list furnished.

Observations
None

Customs Forms Required (123)
First-Class Mail International items and Priority Mail International Flat Rate Envelopes and Small Flat Rate Priced Boxes:
PS Form 2976 (see 123.61)
Priority Mail International parcels:
PS Form 2976-A inside 2976-E (envelope)

Global Express Guaranteed (210)
Not Available

Express Mail International (220)
Not Available

Priority Mail International (230) Price Group 4

Refer to Notice 123, *Price List*, for the applicable retail, commercial base, or commercial plus price.
Weight Limit: 66 lbs.

Note: *Ordinary Priority Mail International includes indemnity at no cost based on weight. (See 230.)*

Priority Mail International — Flat Rate
Flat Rate Envelopes or Small Flat Rate Priced Boxes: The maximum weight is 4 pounds. Refer to Notice 123, *Price List*, for the applicable retail, commercial base, or commercial plus price.

Flat Rate Boxes — Medium and Large: The maximum weight is 20 pounds, or the limit set by the individual country, whichever is less. Refer to Notice 123, *Price List*, for the retail, commercial base, or commercial plus price.

Insurance (232.92)
Available for **Priority Mail International merchandise parcels** only (see 323.72 for markings)

Insured Amount not over	Fee	Insured Amount not over	Fee
$50	$2.45		
100	3.60	Add $1.15 for each additional $100 or fraction of insurance coverage.	
200	4.75		
300	5.90		
400	7.05		
500	8.20	$5,000 max.	$59.95

Size Limits (231.22)
Maximum length: 42 inches
Maximum length and girth combined: 79 inches

First-Class Mail International (240) Price Group 4
For the prices and maximum weights for letters, large envelopes (flats), packages (small packets), and postcards, see Notice 123, *Price List*.

Size Limits
Letters: See 241.212
Postcards: See 241.221
Large Envelopes (Flats): See 241.232
Packages (Small Packets): See 241.242 and 241.243

Airmail M-bags (260) — Direct Sack to One Addressee Price Group 4

Refer to Notice 123, *Price List*, for the applicable retail, commercial base, or commercial plus price.
Weight Limit: 66 lbs.

Matter for the Blind (270)
Free when sent as First-Class Mail International, including Priority Mail International Flat Rate Envelopes and Small Flat Rate Priced Boxes. Weight limit: 4 pounds.
Free when sent as Priority Mail International. Weight limit: 15 pounds.

Extra Services

Certificate of Mailing (313)

Individual Pieces	Fee
Individual article (PS Form 3817)	$1.15
Firm mailing books (PS Form 3877), per article listed (minimum 3)	0.44
Duplicate copy of PS Form 3817 or PS Form 3877 (per page)	1.15
Bulk Quantities	**Fee**
First 1,000 pieces (or fraction thereof)	$6.70
Each additional 1,000 pieces (or fraction thereof)	0.80
Duplicate copy of PS Form 3606	1.15

COD and Certified **NOT** for International Mail

International Business Reply Service (382)
Fee: Envelopes up to 2 ounces $1.50; Cards $1.00

International Postal Money Order (371)
NOT Available

International Reply Coupons (381) **Fee:** $2.20

Registered Mail (330) **Fee:** $11.75
Maximum Indemnity: $47.33
Available for First-Class Mail International, including postcards and Flat Rate Envelopes and Small Flat Rate Priced Boxes, and matter for the blind or other physically handicapped persons. Not applicable to M-bags.

Restricted Delivery (350) NOT Available

Return Receipt (340) **Fee:** $2.35
Available for registered mail and insured Priority Mail International parcels only.

Saint Vincent and the Grenadines

Country Conditions for Mailing

Prohibitions (130)
Arms and ammunition except under license.
Currency.
Radioactive materials.

Restrictions
No list furnished.

Observations
None

Customs Forms Required (123)
First-Class Mail International items and Priority Mail International Flat Rate Envelopes and Small Flat Rate Priced Boxes:
PS Form 2976 (see 123.61)
Priority Mail International parcels:
PS Form 2976-A inside 2976-E (envelope)

Global Express Guaranteed (210) Price Group 7

Refer to Notice 123, *Price List*, for the applicable retail, commercial base, or commercial plus price.

Weight Limit: 70 lbs.

Insurance (212.5)

Insured Amount not over	Fee	Insured Amount not over	Fee
$100	No Fee	For document reconstruction insurance or non-document insurance coverage above $800, add $1.00 per $100 or fraction thereof, up to a maximum of $2,499 per shipment.	
200	$1.00		
300	2.00		
400	3.00		
500	4.00		
600	5.00		
700	6.00		
800	7.00	$2,499 max.	$24.00

Value Limit (212.1)
The maximum value of a GXG shipment to this country is $2,499 or a lesser amount if limited by content or value.

Size Limits (211.22)
The surface area of the address side of the item to be mailed must be large enough to completely contain the Global Express Guaranteed Air Waybill/Shipping Invoice (shipping label), postage, endorsement, and any applicable markings. The shipping label is approximately 5.5 inches high and 9.5 inches long.
Maximum length: 46 inches
Maximum width: 35 inches
Maximum height: 46 inches
Maximum length and girth combined: 108 inches

General Conditions for Mailing
See Publication 141, *Global Express Guaranteed Service Guide,* for information about areas served in the destination country, allowable contents, packaging and labeling requirements, tracking and tracing, service standards, and other conditions for mailing.

Express Mail International (220) Price Group 9

Refer to Notice 123, *Price List*, for the applicable retail, commercial base, or commercial plus price.

Weight Limit: 44 lbs.

Express Mail International — Flat Rate Envelope and Flat Rate Boxes
The maximum weight for the Express Mail International Flat Rate Envelope and the Express Mail International Flat Rate Boxes is 20 pounds. Refer to Notice 123, *Price List*, for the applicable retail, commercial base, or commercial plus price.

Insurance (222.8)
Available for **Express Mail International merchandise shipments** only

Insured Amount not over	Fee	Insured Amount not over	Fee
$100	No Fee	For insurance coverage above $2,000, add $1.50 for each $500 or fraction thereof, up to a maximum of $5,000 per shipment.	
200	$0.85		
500	2.35		
1,000	3.85		
1,500	5.35		
2,000	6.85	$5,000 max.	$15.85

Articles Admitted	Required Customs Form/Endorsement
Correspondence and business papers.	No form required. Endorse items clearly next to mailing label as BUSINESS PAPERS.
Merchandise samples without commercial value and not subject to customs duty.	PS Form 2976, *Customs — CN 22 and Sender's Declaration.*
Merchandise and all articles subject to customs duty.	PS Form 2976-A, *Customs Declaration and Dispatch Note CP 72,* inside a PS Form 2976-E, *Customs Declaration Envelope CP 91*.

Size Limits (221.52)
Maximum length: 36 inches
Maximum length and girth combined: 79 inches

Note:
Coins; banknotes; currency notes, including paper money; securities of any kind payable to bearer; traveler's checks; platinum, gold, and silver; precious stones; jewelry; watches; and other valuable articles are prohibited in Express Mail International shipments to Saint Vincent and the Grenadines.

Reciprocal Service Name: Express Mail Service International (EMS/SVD)

Country Code: VC

Areas Served: All

Priority Mail International (230) Price Group 9

Refer to Notice 123, *Price List*, for the applicable retail, commercial base, or commercial plus price.

Weight Limit: 22 lbs.

Note: *Ordinary Priority Mail International includes indemnity at no cost based on weight. (See 230.)*

Priority Mail International — Flat Rate

Flat Rate Envelopes or Small Flat Rate Priced Boxes: The maximum weight is 4 pounds. Refer to Notice 123, *Price List*, for the applicable retail, commercial base, or commercial plus price.

Flat Rate Boxes — Medium and Large: The maximum weight is 20 pounds, or the limit set by the individual country, whichever is less. Refer to Notice 123, *Price List*, for the retail, commercial base, or commercial plus price.

Insurance (232.92)

Available for **Priority Mail International merchandise parcels** only (see 323.72 for markings)

Insured Amount not over	Fee
$50	$2.45
100	3.60
130 max.	4.75

Size Limits (231.22)

Maximum length: 42 inches
Maximum length and girth combined: 79 inches

First-Class Mail International (240) Price Group 9

For the prices and maximum weights for letters, large envelopes (flats), packages (small packets), and postcards, see Notice 123, *Price List*.

Size Limits

Letters: See 241.212
Postcards: See 241.221
Large Envelopes (Flats): See 241.232
Packages (Small Packets): See 241.242 and 241.243

Airmail M-bags (260) — Direct Sack to One Addressee Price Group 9

Refer to Notice 123, *Price List*, for the applicable retail, commercial base, or commercial plus price.
Weight Limit: 66 lbs.

Matter for the Blind (270)

Free when sent as First-Class Mail International, including Priority Mail International Flat Rate Envelopes and Small Flat Rate Priced Boxes. Weight limit: 4 pounds.
Free when sent as Priority Mail International. Weight limit: 15 pounds.

Extra Services

Certificate of Mailing (313)

Individual Pieces	Fee
Individual article (PS Form 3817)	$1.15
Firm mailing books (PS Form 3877), per article listed (minimum 3)	0.44
Duplicate copy of PS Form 3817 or PS Form 3877 (per page)	1.15
Bulk Quantities	**Fee**
First 1,000 pieces (or fraction thereof)	$6.70
Each additional 1,000 pieces (or fraction thereof)	0.80
Duplicate copy of PS Form 3606	1.15

COD and Certified **NOT** for International Mail

International Business Reply Service (382)

Fee: Envelopes up to 2 ounces $1.50; Cards $1.00

International Postal Money Order (371)

Use MO Form MP1
Maximum Amount Available: $700 **Fee:** $4.45
Money Order Inquiry: **Fee:** $5.50

International Reply Coupons (381) **Fee:** $2.20

Registered Mail (330) **Fee:** $11.75

Maximum Indemnity: $47.33
Available for First-Class Mail International, including postcards and Flat Rate Envelopes and Small Flat Rate Priced Boxes, and matter for the blind or other physically handicapped persons. Not applicable to M-bags.

Restricted Delivery (350) **Fee:** $4.55

Available for registered mail with a return receipt.
Endorsements: A remettre en main propre.

Return Receipt (340) **Fee:** $2.35

Available for registered mail and insured Priority Mail International parcels only.

San Marino

Country Conditions for Mailing

Certificate of Mailing Prohibitions (130)

Albums of any kind (of photographs, postcards, postage stamps, etc.).
Arms and weapons.
Articles of platinum or gold; jewelry; and other valuable articles unless sent as insured packages.
Artificial flowers and fruits and accessories for them.
Bells and other musical instruments and parts thereof.
Cartridge caps; cartridges.
Clocks and supplies for clocks.
Coins; banknotes; securities payable to bearer circulating abroad; and precious stones. However, Italian metal coins, banknotes and securities payable to bearer sent direct by foreign banks to Italian banks for exchange or replacement are permitted.
Compound medicaments and medicines.
Coral mounted in any way.
Ether and chloroform.
Exposed photographic and cinematographic films.
Footwear of any kind.
Haberdashery and sewn articles of any kind, including trimmings and lace; handkerchiefs; scarves; shawls, needlework including stockings and gloves; bonnets, caps, and hats of any kind.
Hair and articles made of hair.
Human remains.
Leather goods.
Lighters and their parts, including lighter flints.
Live plants and animals.
Nutmeg, vanilla; sea salt, rock salt; saffron.
Perfumery goods of all kinds (except soap).
Playing cards of any kind.
Postage stamps in sealed or unsealed First-Class Mail International shipments.
Radioactive materials.
Ribbons for typewriters.
Roasted or ground coffee and it substitutes; roasted chicory.
Saccharine and all products containing saccharine.
Salted, smoked or otherwise prepared meats; fats; and lard.
Tobacco.
Toys not made wholly of wood.
Treated skins and furs.
Weapons of any kind and spare parts for them.

Restrictions

Postage stamps for philatelic purposes are admitted in registered letters on condition that the package bears a completed Form 2976 and the addressee complies with the Italian financial regulations.

Observations

1. A parcel may be addressed to a street address or to a post office box. A local telephone number for the addressee should be provided when the item is addressed to a street address and must be provided when the item is addressed to a post office box.
2. For parcels, an invoice, in duplicate, is required for all commercial shipments regardless of value and all personal shipments valued at $300 or more. The invoices must be affixed to the outside of the parcel or may be enclosed in PS Form 2976-E with the customs declaration.
3. First-Class Mail International shipments may not contain dutiable articles.
4. Shipments containing books must bear a PS Form 2976.
5. Many articles are subject to an import license or quantity restrictions. Senders should ascertain from the addressee before mailing whether the articles will be admitted or whether the necessary documents, if required, are held.

Customs Forms Required (123)

First-Class Mail International items and Priority Mail International Flat Rate Envelopes and Small Flat Rate Priced Boxes:
PS Form 2976 (see 123.61)
Priority Mail International parcels:
PS Form 2976-A inside 2976-E (envelope)

Global Express Guaranteed (210) Price Group 3

Refer to Notice 123, *Price List*, for the applicable retail, commercial base, or commercial plus price.
Weight Limit: 70 lbs.

Insurance (212.5)

Insured Amount not over	Fee	Insured Amount not over	Fee
$100	No Fee	For document reconstruction insurance or non-document insurance coverage above $800, add $1.00 per $100 or fraction thereof, up to a maximum of $2,499 per shipment.	
200	$1.00		
300	2.00		
400	3.00		
500	4.00		
600	5.00		
700	6.00		
800	7.00	$2,499 max.	$24.00

Value Limit (212.1)

The maximum value of a GXG shipment to this country is $2,499 or a lesser amount if limited by content or value.

Size Limits (211.22)

The surface area of the address side of the item to be mailed must be large enough to completely contain the Global Express Guaranteed Air Waybill/Shipping Invoice (shipping label), postage, endorsement, and any applicable markings. The shipping label is approximately 5.5 inches high and 9.5 inches long.
Maximum length: 46 inches
Maximum width: 35 inches
Maximum height: 46 inches
Maximum length and girth combined: 108 inches

General Conditions for Mailing

See Publication 141, *Global Express Guaranteed Service Guide,* for information about areas served in the destination country, allowable contents, packaging and labeling requirements, tracking and tracing, service standards, and other conditions for mailing.

Note: To determine conditions and available city destinations for San Marino, refer to Publication 141's country listing for Italy.

Express Mail International (220) Price Group 5

Refer to Notice 123, *Price List*, for the applicable retail, commercial base, or commercial plus price.
Weight Limit: 66 lbs.

Express Mail International — Flat Rate Envelope and Flat Rate Boxes

The maximum weight for the Express Mail International Flat Rate Envelope and the Express Mail International Flat Rate Boxes is 20 pounds. Refer to Notice 123, *Price List*, for the applicable retail, commercial base, or commercial plus price.

Insurance (222.8)
Available for **Express Mail International merchandise shipments** only

Insured Amount not over	Fee	Insured Amount not over	Fee
$100	No Fee	For insurance coverage above $2,000, add $1.50 for each $500 or fraction thereof, up to a maximum of $5,000 per shipment.	
200	$0.85		
500	2.35		
1,000	3.85		
1,500	5.35		
2,000	6.85	$5,000 max.	$15.85

Articles Admitted	Required Customs Form/Endorsement
Any kind of written communications including legal documents, instruments, and manuscripts; computer data, including magnetic tapes, magnetic disks, punch cards, and recording tapes.	PS Form 2976, *Customs — CN 22 and Sender's Declaration.*
Merchandise samples without commercial value.	PS Form 2976-A, *Customs Declaration and Dispatch Note CP 72,* inside a PS Form 2976-E, *Customs Declaration Envelope CP 91.*
Merchandise and all articles subject to customs duty.	PS Form 2976-A, *Customs Declaration and Dispatch Note CP 72,* inside a PS Form 2976-E, *Customs Declaration Envelope CP 91.* An invoice, in duplicate, is required for all commercial shipments regardless of value and all personal shipments valued at $300 or more. The invoices must be either affixed to the outside of the parcel or enclosed in PS Form 2976-E with the customs declaration.

Size Limits (221.52)
Maximum length: 60 inches
Maximum length and girth combined: 108 inches

Notes:
1. An invoice, in duplicate, is required for all commercial shipments regardless of value and for all personal shipments valued at $300 or more. The invoices must be either affixed to the outside of the parcel or enclosed in PS Form 2976-E with the customs declaration.
2. Arms, weapons, and human remains are prohibited.
3. Coins; banknotes; currency notes, including paper money; securities of any kind payable to bearer; traveler's checks; platinum, gold, and silver; precious stones; jewelry; watches; and other valuable articles are prohibited in Express Mail International shipments to San Marino.
4. An Express Mail International shipment may be addressed to a street address or to a post office box. A local telephone number for the addressee should be provided when the item is addressed to a street address and must be provided when the item is addressed to a post office box.

Reciprocal Service Name: There is no reciprocal service.

Country Code: SM

Areas Served: All

Priority Mail International (230) Price Group 5

Refer to Notice 123, *Price List*, for the applicable retail, commercial base, or commercial plus price.
Weight Limit: 66 lbs.

Note: *Ordinary Priority Mail International includes indemnity at no cost based on weight. (See 230.)*

Priority Mail International — Flat Rate
Flat Rate Envelopes or Small Flat Rate Priced Boxes: The maximum weight is 4 pounds. Refer to Notice 123, *Price List*, for the applicable retail, commercial base, or commercial plus price.

Flat Rate Boxes — Medium and Large: The maximum weight is 20 pounds, or the limit set by the individual country, whichever is less. Refer to Notice 123, *Price List*, for the retail, commercial base, or commercial plus price.

Insurance (232.92)
Available for **Priority Mail International merchandise parcels** only (see 323.72 for markings)

Insured Amount not over	Fee	Insured Amount not over	Fee
$50	$2.45	Add $1.15 for each additional $100 or fraction of insurance coverage.	
100	3.60		
200	4.75		
300	5.90		
400	7.05		
500	8.20	$5,000 max.	$59.95

Size Limits (231.22)
Maximum length: 60 inches
Maximum length and girth combined: 108 inches

First-Class Mail International (240) Price Group 5
For the prices and maximum weights for letters, large envelopes (flats), packages (small packets), and postcards, see Notice 123, *Price List*.

Size Limits
Letters: See 241.212
Postcards: See 241.221
Large Envelopes (Flats): See 241.232
Packages (Small Packets): See 241.242 and 241.243

Airmail M-bags (260) — Direct Sack to One Addressee Price Group 5

Refer to Notice 123, *Price List*, for the applicable retail, commercial base, or commercial plus price.
Weight Limit: 66 lbs.

Matter for the Blind (270)
Free when sent as First-Class Mail International, including Priority Mail International Flat Rate Envelopes and Small Flat Rate Priced Boxes. Weight limit: 4 pounds.
Free when sent as Priority Mail International. Weight limit: 15 pounds.

Extra Services

Certificate of Mailing (313)

Individual Pieces	Fee
Individual article (PS Form 3817)	$1.15
Firm mailing books (PS Form 3877), per article listed (minimum 3)	0.44
Duplicate copy of PS Form 3817 or PS Form 3877 (per page)	1.15
Bulk Quantities	**Fee**
First 1,000 pieces (or fraction thereof)	$6.70
Each additional 1,000 pieces (or fraction thereof)	0.80
Duplicate copy of PS Form 3606	1.15

COD and Certified

NOT for International Mail

International Business Reply Service (382)

Fee: Envelopes up to 2 ounces $1.50; Cards $1.00

International Postal Money Order (371)

NOT Available

International Reply Coupons (381)

Fee: $2.20

Registered Mail (330)

Fee: $11.75

Maximum Indemnity: $47.33
Available for First-Class Mail International, including postcards and Flat Rate Envelopes and Small Flat Rate Priced Boxes, and matter for the blind or other physically handicapped persons. Not applicable to M-bags.

Restricted Delivery (350)

Fee: $4.55

Available for registered mail with a return receipt.
Endorsements: A remettre en main propre.

Return Receipt (340)

Fee: $2.35

Available for registered mail and insured Priority Mail International parcels only.

Sao Tome and Principe

Country Conditions for Mailing

Prohibitions (130)
No list furnished.

Restrictions
No list furnished.

Observations
None

Customs Forms Required (123)
First-Class Mail International items and Priority Mail International Flat Rate Envelopes and Small Flat Rate Priced Boxes:
PS Form 2976 (see 123.61)
Priority Mail International parcels:
PS Form 2976-A inside 2976-E (envelope)

Global Express Guaranteed (210)
Not Available

Express Mail International (220)
Not Available

Priority Mail International (230) Price Group 7

Refer to Notice 123, *Price List*, for the applicable retail, commercial base, or commercial plus price.
Weight Limit: 44 lbs.

Note: *Ordinary Priority Mail International includes indemnity at no cost based on weight. (See 230.)*

Priority Mail International — Flat Rate
Flat Rate Envelopes or Small Flat Rate Priced Boxes: The maximum weight is 4 pounds. Refer to Notice 123, *Price List*, for the applicable retail, commercial base, or commercial plus price.

Flat Rate Boxes — Medium and Large: The maximum weight is 20 pounds, or the limit set by the individual country, whichever is less. Refer to Notice 123, *Price List*, for the retail, commercial base, or commercial plus price.

Insurance (232.92)
Available for **Priority Mail International merchandise parcels** only (see 323.72 for markings)

Insured Amount not over	Fee
$50	$2.45
100	3.60
200	4.75
300	5.90
400	7.05
440 max.	8.20

Size Limits (231.22)
Maximum length: 42 inches
Maximum length and girth combined: 79 inches

First-Class Mail International (240) Price Group 7
For the prices and maximum weights for letters, large envelopes (flats), packages (small packets), and postcards, see Notice 123, *Price List*.

Size Limits
Letters: See 241.212
Postcards: See 241.221
Large Envelopes (Flats): See 241.232
Packages (Small Packets): See 241.242 and 241.243

Airmail M-bags (260) — Direct Sack to One Addressee Price Group 7

Refer to Notice 123, *Price List*, for the applicable retail, commercial base, or commercial plus price.
Weight Limit: 66 lbs.

Matter for the Blind (270)
Free when sent as First-Class Mail International, including Priority Mail International Flat Rate Envelopes and Small Flat Rate Priced Boxes. Weight limit: 4 pounds.
Free when sent as Priority Mail International. Weight limit: 15 pounds.

Extra Services

Certificate of Mailing (313)

Individual Pieces	Fee
Individual article (PS Form 3817)	$1.15
Firm mailing books (PS Form 3877), per article listed (minimum 3)	0.44
Duplicate copy of PS Form 3817 or PS Form 3877 (per page)	1.15
Bulk Quantities	**Fee**
First 1,000 pieces (or fraction thereof)	$6.70
Each additional 1,000 pieces (or fraction thereof)	0.80
Duplicate copy of PS Form 3606	1.15

COD and Certified **NOT** for International Mail

International Business Reply Service (382)
Fee: Envelopes up to 2 ounces $1.50; Cards $1.00

International Postal Money Order (371)
NOT Available

International Reply Coupons (381) **Fee:** $2.20

Registered Mail (330) **Fee:** $11.75
Maximum Indemnity: $47.33
Available for First-Class Mail International, including postcards and Flat Rate Envelopes and Small Flat Rate Priced Boxes, and matter for the blind or other physically handicapped persons. Not applicable to M-bags.

Restricted Delivery (350) **Fee:** $4.55
Available for registered mail with a return receipt.
Endorsements: A remettre en main propre.

Return Receipt (340) **Fee:** $2.35
Available for registered mail and insured Priority Mail International parcels only.

Saudi Arabia

Country Conditions for Mailing

Prohibitions (130)

Arms, munitions, and war material.
Books and prints contrary to the Islamic faith.
Coins, banknotes; currency notes (paper money); securities of any kind payable to bearer; traveler's checks; platinum, gold, and silver (manufactured or not); precious stones; jewelry; and other valuable articles.
Perishable infectious biological substances.
Radioactive materials.

Restrictions

Medicines, pharmaceutical, and plant-based products and foodstuffs for medical purposes are not admissible unless accompanied by prior authorization from the General Food and Medicine Authority of the Kingdom of Saudi Arabia. First-Class Mail International, small packets, postal parcels, registered items, and Express Mail International shipments are all subject to that documentation requirement.
Recorded tapes (cassettes) are not admitted in Registered Mail. Such items are admitted only in ordinary mail.

Observations

First-Class Mail International items may not contain dutiable articles.

Customs Forms Required (123)

First-Class Mail International items and Priority Mail International Flat Rate Envelopes and Small Flat Rate Priced Boxes:
PS Form 2976 (see 123.61)
Priority Mail International parcels:
PS Form 2976-A inside 2976-E (envelope)

Global Express Guaranteed (210) Price Group 4

Refer to Notice 123, *Price List*, for the applicable retail, commercial base, or commercial plus price.

Weight Limit: 70 lbs.

Insurance (212.5)

Insured Amount not over	Fee	Insured Amount not over	Fee
$100	No Fee	For document reconstruction insurance or non-document insurance coverage above $800, add $1.00 per $100 or fraction thereof, up to a maximum of $2,499 per shipment.	
200	$1.00		
300	2.00		
400	3.00		
500	4.00		
600	5.00		
700	6.00		
800	7.00	$2,499 max.	$24.00

Value Limit (212.1)

The maximum value of a GXG shipment to this country is $2,499 or a lesser amount if limited by content or value.

Size Limits (211.22)

The surface area of the address side of the item to be mailed must be large enough to completely contain the Global Express Guaranteed Air Waybill/Shipping Invoice (shipping label), postage, endorsement, and any applicable markings. The shipping label is approximately 5.5 inches high and 9.5 inches long.
Maximum length: 46 inches
Maximum width: 35 inches
Maximum height: 46 inches
Maximum length and girth combined: 108 inches

General Conditions for Mailing

See Publication 141, *Global Express Guaranteed Service Guide,* for information about areas served in the destination country, allowable contents, packaging and labeling requirements, tracking and tracing, service standards, and other conditions for mailing.

Express Mail International (220) Price Group 8

Refer to Notice 123, *Price List*, for the applicable retail, commercial base, or commercial plus price.

Weight Limit: 66 lbs.

Express Mail International — Flat Rate Envelope and Flat Rate Boxes

The maximum weight for the Express Mail International Flat Rate Envelope and the Express Mail International Flat Rate Boxes is 20 pounds. Refer to Notice 123, *Price List*, for the applicable retail, commercial base, or commercial plus price.

Insurance (222.8)

Available for **Express Mail International merchandise shipments** only

Insured Amount not over	Fee	Insured Amount not over	Fee
$100	No Fee	For insurance coverage above $2,000, add $1.50 for each $500 or fraction thereof, up to a maximum of $5,000 per shipment.	
200	$0.85		
500	2.35		
1,000	3.85		
1,500	5.35		
2,000	6.85	$5,000 max.	$15.85

Articles Admitted	Required Customs Form/Endorsement
Business documents and commercial papers.	No form required. Endorse item clearly next to mailing label as BUSINESS PAPERS.
Merchandise samples without commercial value and computer data.	PS Form 2976, *Customs — CN 22 and Sender's Declaration.*
Merchandise and all articles subject to customs duty.	PS Form 2976-A, *Customs Declaration and Dispatch Note CP 72,* inside a PS Form 2976-E, *Customs Declaration Envelope CP 91.*

Size Limits (221.52)

Maximum length: 36 inches
Maximum length and girth combined: 79 inches

Notes:

1. All Express Mail International shipments to Saudi Arabia should include complete addresses, in addition to post office box numbers, and the telephone number of the addressee.
2. Coins; banknotes; currency notes, including paper money; securities of any kind payable to bearer; traveler's checks; platinum, gold, and silver; precious stones; jewelry; watches; and other valuable articles are prohibited in Express Mail International shipments to Saudi Arabia.

Reciprocal Service Name: Al Barid Al Mumtaz

Country Code: SA

Areas Served:

Abha	Dawmat Al-Jundul	Qaryat
Al Ahssa	Dhahran (airport)	Ras
Al Bukairieh	Hafar al Batin	Ras Tanourah
Al Khafji	Ha'il	Riyadh
Al Kharj	Ir'Ir	Safwa
Al Khobar	Jeddah	Sakkaka
Al Mozannab	Jizan	Seihat
Al Qoteif	Jubayl	Tabuk
Baha	Jubayl Industrial	Ta'if
Beljarshi	Khamis Mushayt	Unayzah
Bicha	Mecca	Yambu Maritime
Buraydah	Medina	Yanbu Industrial
Dammam	Najran	

Priority Mail International (230) Price Group 8

Refer to Notice 123, *Price List*, for the applicable retail, commercial base, or commercial plus price.
Weight Limit: 66 lbs.

Note: *Ordinary Priority Mail International includes indemnity at no cost based on weight. (See 230.)*

Priority Mail International — Flat Rate

Flat Rate Envelopes or Small Flat Rate Priced Boxes: The maximum weight is 4 pounds. Refer to Notice 123, *Price List*, for the applicable retail, commercial base, or commercial plus price.

Flat Rate Boxes — Medium and Large: The maximum weight is 20 pounds, or the limit set by the individual country, whichever is less. Refer to Notice 123, *Price List*, for the retail, commercial base, or commercial plus price.

Insurance (232.92) NOT Available

Size Limits (231.22)

Maximum length: 42 inches
Maximum length and girth combined: 79 inches

First-Class Mail International (240) Price Group 8

For the prices and maximum weights for letters, large envelopes (flats), packages (small packets), and postcards, see Notice 123, *Price List*.

Size Limits

Letters: See 241.212
Postcards: See 241.221
Large Envelopes (Flats): See 241.232
Packages (Small Packets): See 241.242 and 241.243

Airmail M-bags (260) — Direct Sack to One Addressee Price Group 8

Refer to Notice 123, *Price List*, for the applicable retail, commercial base, or commercial plus price.
Weight Limit: 66 lbs.

Matter for the Blind (270)

Free when sent as First-Class Mail International, including Priority Mail International Flat Rate Envelopes and Small Flat Rate Priced Boxes. Weight limit: 4 pounds.
Free when sent as Priority Mail International. Weight limit: 15 pounds.

Extra Services

Certificate of Mailing (313)

Individual Pieces	Fee
Individual article (PS Form 3817)	$1.15
Firm mailing books (PS Form 3877), per article listed (minimum 3)	0.44
Duplicate copy of PS Form 3817 or PS Form 3877 (per page)	1.15
Bulk Quantities	**Fee**
First 1,000 pieces (or fraction thereof)	$6.70
Each additional 1,000 pieces (or fraction thereof)	0.80
Duplicate copy of PS Form 3606	1.15

COD and Certified **NOT** for International Mail

International Business Reply Service (382)

Fee: Envelopes up to 2 ounces $1.50; Cards $1.00

International Postal Money Order (371)

NOT Available

International Reply Coupons (381) **Fee:** $2.20

Registered Mail (330) **Fee:** $11.75

Maximum Indemnity: $47.33
Available for First-Class Mail International, including postcards and Flat Rate Envelopes and Small Flat Rate Priced Boxes, and matter for the blind or other physically handicapped persons. Not applicable to M-bags.

Restricted Delivery (350) NOT Available

Return Receipt (340) **Fee:** $2.35

Available for registered mail only.

Senegal

Country Conditions for Mailing

Prohibitions (130)

Articles with markings, labels, or wrappings indicating falsely that they are of French origin. Articles using the "Red Cross" or "Geneva Cross" as a trademark.

Coins; banknotes; currency notes; securities of any kind payable to bearer; traveler's checks; platinum, gold, or silver (manufactured or not); precious stones, jewelry; and other valuables.

Weights and measures not of the metric system.

Restrictions

The following articles are subject to special regulations on importation: firearms and airguns; distilling apparatus; saccharine and artificial flavors for beverages and confectionery; phonograph records; Arabic books and prints; and medicines.

Observations

First-Class Mail International items containing dutiable articles must be registered.

Customs Forms Required (123)

First-Class Mail International items and Priority Mail International Flat Rate Envelopes and Small Flat Rate Priced Boxes:
PS Form 2976 (see 123.61)

Priority Mail International parcels:
PS Form 2976-A inside 2976-E (envelope)

Global Express Guaranteed (210) Price Group 4

Refer to Notice 123, *Price List*, for the applicable retail, commercial base, or commercial plus price.
Weight Limit: 70 lbs.

Insurance (212.5)

Insured Amount not over	Fee	Insured Amount not over	Fee
$100	No Fee	For document reconstruction insurance or non-document insurance coverage above $800, add $1.00 per $100 or fraction thereof, up to a maximum of $2,499 per shipment.	
200	$1.00		
300	2.00		
400	3.00		
500	4.00		
600	5.00		
700	6.00		
800	7.00	$2,499 max.	$24.00

Value Limit (212.1)

The maximum value of a GXG shipment to this country is $2,499 or a lesser amount if limited by content or value.

Size Limits (211.22)

The surface area of the address side of the item to be mailed must be large enough to completely contain the Global Express Guaranteed Air Waybill/Shipping Invoice (shipping label), postage, endorsement, and any applicable markings. The shipping label is approximately 5.5 inches high and 9.5 inches long.

Maximum length: 46 inches
Maximum width: 35 inches
Maximum height: 46 inches
Maximum length and girth combined: 108 inches

General Conditions for Mailing

See Publication 141, *Global Express Guaranteed Service Guide,* for information about areas served in the destination country, allowable contents, packaging and labeling requirements, tracking and tracing, service standards, and other conditions for mailing.

Express Mail International (220) Price Group 7

Refer to Notice 123, *Price List*, for the applicable retail, commercial base, or commercial plus price.
Weight Limit: 66 lbs.

Express Mail International — Flat Rate Envelope and Flat Rate Boxes

The maximum weight for the Express Mail International Flat Rate Envelope and the Express Mail International Flat Rate Boxes is 20 pounds. Refer to Notice 123, *Price List*, for the applicable retail, commercial base, or commercial plus price.

Insurance (222.8)

Available for **Express Mail International merchandise shipments** only

Insured Amount not over	Fee	Insured Amount not over	Fee
$100	No Fee	For insurance coverage above $2,000, add $1.50 for each $500 or fraction thereof, up to a maximum of $5,000 per shipment.	
200	$0.85		
500	2.35		
1,000	3.85		
1,500	5.35		
2,000	6.85	$5,000 max.	$15.85

Articles Admitted	Required Customs Form/Endorsement
Correspondence, business papers, and computer data.	No form required. Endorse item clearly next to mailing label as BUSINESS PAPERS.
Merchandise samples without commercial value.	PS Form 2976, *Customs — CN 22 and Sender's Declaration.*
Merchandise or any item subject to customs duty.	PS Form 2976-A, *Customs Declaration and Dispatch Note CP 72,* inside a PS Form 2976-E, *Customs Declaration Envelope CP 91.*

Size Limits (221.52)

Maximum length: 36 inches
Maximum length and girth combined: 79 inches

Note:
Coins; banknotes; currency notes, including paper money; securities of any kind payable to bearer; traveler's checks; platinum, gold, and silver; precious stones; jewelry; watches; and other valuable articles are prohibited in Express Mail International shipments to Senegal.

Reciprocal Service Name: International High Speed Mail

Country Code: SN

Areas Served: All

Priority Mail International (230) Price Group 7

Refer to Notice 123, *Price List*, for the applicable retail, commercial base, or commercial plus price.
Weight Limit: 66 lbs.

Note: *Ordinary Priority Mail International includes indemnity at no cost based on weight. (See 230.)*

Priority Mail International — Flat Rate
Flat Rate Envelopes or Small Flat Rate Priced Boxes: The maximum weight is 4 pounds. Refer to Notice 123, *Price List*, for the applicable retail, commercial base, or commercial plus price.

Flat Rate Boxes — Medium and Large: The maximum weight is 20 pounds, or the limit set by the individual country, whichever is less. Refer to Notice 123, *Price List*, for the retail, commercial base, or commercial plus price.

Insurance (232.92)
Available for **Priority Mail International merchandise parcels** only (see 323.72 for markings)

Insured Amount not over	Fee	Insured Amount not over	Fee
$50	$2.45		
100	3.60	Add $1.15 for each additional $100 or fraction of insurance coverage.	
200	4.75		
300	5.90		
400	7.05		
500	8.20	$936 max.	$13.95

Size Limits (231.22)
Maximum length: 42 inches
Maximum length and girth combined: 79 inches

First-Class Mail International (240) Price Group 7
For the prices and maximum weights for letters, large envelopes (flats), packages (small packets), and postcards, see Notice 123, *Price List*.

Size Limits
Letters: See 241.212
Postcards: See 241.221
Large Envelopes (Flats): See 241.232
Packages (Small Packets): See 241.242 and 241.243

Airmail M-bags (260) — Direct Sack to One Addressee Price Group 7

Refer to Notice 123, *Price List*, for the applicable retail, commercial base, or commercial plus price.
Weight Limit: 66 lbs.

Matter for the Blind (270)
Free when sent as First-Class Mail International, including Priority Mail International Flat Rate Envelopes and Small Flat Rate Priced Boxes. Weight limit: 4 pounds.
Free when sent as Priority Mail International. Weight limit: 15 pounds.

Extra Services

Certificate of Mailing (313)

Individual Pieces	Fee
Individual article (PS Form 3817)	$1.15
Firm mailing books (PS Form 3877), per article listed (minimum 3)	0.44
Duplicate copy of PS Form 3817 or PS Form 3877 (per page)	1.15
Bulk Quantities	**Fee**
First 1,000 pieces (or fraction thereof)	$6.70
Each additional 1,000 pieces (or fraction thereof)	0.80
Duplicate copy of PS Form 3606	1.15

COD and Certified **NOT** for International Mail

International Business Reply Service (382)
Fee: Envelopes up to 2 ounces $1.50; Cards $1.00

International Postal Money Order (371)
NOT Available

International Reply Coupons (381) **Fee:** $2.20

Registered Mail (330) **Fee:** $11.75
Maximum Indemnity: $47.33
Available for First-Class Mail International, including postcards and Flat Rate Envelopes and Small Flat Rate Priced Boxes, and matter for the blind or other physically handicapped persons. Not applicable to M-bags.

Restricted Delivery (350) NOT Available

Return Receipt (340) **Fee:** $2.35
Available for registered mail and insured Priority Mail International parcels only.

Serbia, Republic of

Country Conditions for Mailing

Prohibitions (130)

Weapons and ammunition by private individuals.
Cigarette paper.
Coins; banknotes; currency notes (paper money); securities payable to bearer; traveler's checks; platinum, gold, and silver, manufactured or not; precious stones; jewelry; and other valuable articles except in insured Priority Mail International parcels.
Lottery tickets and advertisements concerning lotteries.
Radioactive materials.
Yugoslav money.

Restrictions

Importation of medicine into Serbia is possible only through a legal entity that has permission to import medicine and medical equipment from the National Law of Medicines and Medical Equipment of the Republic of Serbia. Individuals may receive samples of medicine in compliance with that law.

Observations

1. Postal items addressed to natural persons of Yugoslav or foreign nationality may contain personal travel articles, articles for personal use, and for the use of members of a family (medicines and medical instruments, teaching material, and leisure material), and articles for the use of their household in quantities not intended for resale. Such articles shall be imported against payment of Customs duty and other fees.
2. Items inherited abroad as well as articles provided for in contracts concluded between States may be freely imported in accordance with such contracts.
3. Items addressed to natural persons of Yugoslav or foreign nationality, the total equivalent value of which in dinars does not exceed 30 United States of America dollars (USD), are exempted from Customs duty; items the total equivalent value of which exceeds 30 United States dollars do not enjoy this privilege.
4. Natural persons of Yugoslav nationality exercising a profession are entitled to import articles serving to exercise that profession (equipment, reproduction material, and spare parts); importation will be subject to special conditions.
5. The sender is required to show clearly on the Customs declaration the special entitlement to import items containing articles imported under special conditions and regulations. Failing this, the addressee will be required to produce proof before delivery.
6. The value restriction does not apply to certain articles sent to persons who are entitled under special rules and conditions to import certain articles or to items containing articles inherited abroad.

Customs Forms Required (123)

First-Class Mail International items and Priority Mail International Flat Rate Envelopes and Small Flat Rate Priced Boxes:
PS Form 2976 (see 123.61)
Priority Mail International parcels:
PS Form 2976-A inside 2976-E (envelope)

Global Express Guaranteed (210) Price Group 4

Refer to Notice 123, *Price List*, for the applicable retail, commercial base, or commercial plus price.
Weight Limit: 70 lbs.

Insurance (212.5)

Insured Amount not over	Fee	Insured Amount not over	Fee
$100	No Fee	For document reconstruction insurance or non-document insurance coverage above $800, add $1.00 per $100 or fraction thereof, up to a maximum of $2,499 per shipment.	
200	$1.00		
300	2.00		
400	3.00		
500	4.00		
600	5.00		
700	6.00		
800	7.00	$2,499 max.	$24.00

Value Limit (212.1)

The maximum value of a GXG shipment to this country is $2,499 or a lesser amount if limited by content or value.

Size Limits (211.22)

The surface area of the address side of the item to be mailed must be large enough to completely contain the Global Express Guaranteed Air Waybill/Shipping Invoice (shipping label), postage, endorsement, and any applicable markings. The shipping label is approximately 5.5 inches high and 9.5 inches long.
Maximum length: 46 inches
Maximum width: 35 inches
Maximum height: 46 inches
Maximum length and girth combined: 108 inches

General Conditions for Mailing

See Publication 141, *Global Express Guaranteed Service Guide,* for information about areas served in the destination country, allowable contents, packaging and labeling requirements, tracking and tracing, service standards, and other conditions for mailing.

Express Mail International (220) Price Group 5

Refer to Notice 123, *Price List*, for the applicable retail, commercial base, or commercial plus price.
Weight Limit: 66 lbs.

Express Mail International — Flat Rate Envelope and Flat Rate Boxes

The maximum weight for the Express Mail International Flat Rate Envelope and the Express Mail International Flat Rate Boxes is 20 pounds. Refer to Notice 123, *Price List*, for the applicable retail, commercial base, or commercial plus price.

Insurance (222.8)

Available for **Express Mail International merchandise shipments** only

Insured Amount not over	Fee	Insured Amount not over	Fee
$100	No Fee	For insurance coverage above $2,000, add $1.50 for each $500 or fraction thereof, up to a maximum of $5,000 per shipment.	
200	$0.85		
500	2.35		
1,000	3.85		
1,500	5.35		
2,000	6.85	$5,000 max.	$15.85

Articles Admitted	Required Customs Form/Endorsement
Correspondence, business papers, computer data, and advertising material.	PS Form 2976, *Customs — CN 22 and Sender's Declaration.* Endorse item clearly next to mailing label as BUSINESS PAPERS.
Merchandise samples without commercial value.	PS Form 2976, *Customs — CN 22 and Sender's Declaration.*
Merchandise and all articles subject to customs duty.	PS Form 2976-A, *Customs Declaration and Dispatch Note CP 72,* inside a PS Form 2976-E, *Customs Declaration Envelope CP 91.* A commercial invoice must be enclosed in each item.

Size Limits (221.52)
Maximum length: 36 inches
Maximum length and girth combined: 79 inches

Notes:
1. Coins; banknotes; currency notes, including paper money; securities of any kind payable to bearer; traveler's checks; platinum, gold, and silver; precious stones; jewelry; watches; and other valuable articles are prohibited in Express Mail International shipments to the Republic of Serbia.
2. Medicines must be accompanied by a medical prescription or by an attestation from a medical institution justifying the need to use such medicines.

Reciprocal Service Name: Courier EMS

Country Code: RS

Areas Served:

City	Postal Code
Belgrade	11000, 11030, 11050, 11060, 11070, 11080, 11090
Cacak	32000
Kragujevac	34000
Kraljevo	36000
Krusevac	37000
Leskovac	16000
Nis	18000
Novi Sad	21000
Pancevo	26000
Pozarevac	12000
Sabac	15000
Sombor	25000
Sremska Mitrovica	22000
Subotica	24000
Svetozarevo	35000
Titivo Uzice	31000
Valjevo	14000
Vranje	17000
Zajecar	19000
Zrenjanin	23000

Priority Mail International (230) Price Group 5

Refer to Notice 123, *Price List*, for the applicable retail, commercial base, or commercial plus price.
Weight Limit: 70 lbs.

Note: *Ordinary Priority Mail International includes indemnity at no cost based on weight. (See 230.)*

Priority Mail International — Flat Rate
Flat Rate Envelopes or Small Flat Rate Priced Boxes: The maximum weight is 4 pounds. Refer to Notice 123, *Price List*, for the applicable retail, commercial base, or commercial plus price.

Flat Rate Boxes — Medium and Large: The maximum weight is 20 pounds, or the limit set by the individual country, whichever is less. Refer to Notice 123, *Price List*, for the retail, commercial base, or commercial plus price.

Insurance (232.92)
Available for **Priority Mail International merchandise parcels** only (see 323.72 for markings)

Insured Amount not over	Fee	Insured Amount not over	Fee
$50	$2.45		
100	3.60	Add $1.15 for each additional $100 or fraction of insurance coverage.	
200	4.75		
300	5.90		
400	7.05		
500	8.20	$5,000 max.	$59.95

Size Limits (231.22)
Maximum length: 42 inches
Maximum length and girth combined: 79 inches

First-Class Mail International (240) Price Group 5
For the prices and maximum weights for letters, large envelopes (flats), packages (small packets), and postcards, see Notice 123, *Price List*.

Size Limits
Letters: See 241.212
Postcards: See 241.221
Large Envelopes (Flats): See 241.232
Packages (Small Packets): See 241.242 and 241.243

Airmail M-bags (260) — Direct Sack to One Addressee Price Group 5

Refer to Notice 123, *Price List*, for the applicable retail, commercial base, or commercial plus price.
Weight Limit: 66 lbs.

Matter for the Blind (270)
Free when sent as First-Class Mail International, including Priority Mail International Flat Rate Envelopes and Small Flat Rate Priced Boxes. Weight limit: 4 pounds.
Free when sent as Priority Mail International. Weight limit: 15 pounds.

Extra Services

Certificate of Mailing (313)

Individual Pieces	Fee
Individual article (PS Form 3817)	$1.15
Firm mailing books (PS Form 3877), per article listed (minimum 3)	0.44
Duplicate copy of PS Form 3817 or PS Form 3877 (per page)	1.15
Bulk Quantities	**Fee**
First 1,000 pieces (or fraction thereof)	$6.70
Each additional 1,000 pieces (or fraction thereof)	0.80
Duplicate copy of PS Form 3606	1.15

COD and Certified **NOT** for International Mail

International Business Reply Service (382)
Fee: Envelopes up to 2 ounces $1.50; Cards $1.00

International Postal Money Order (371)
NOT Available

International Reply Coupons (381) **Fee:** $2.20

Registered Mail (330) **Fee:** $11.75
Maximum Indemnity: $47.33
Available for First-Class Mail International, including postcards and Flat Rate Envelopes and Small Flat Rate Priced Boxes, and matter for the blind or other physically handicapped persons. Not applicable to M-bags.

Restricted Delivery (350) NOT Available

Return Receipt (340) **Fee:** $2.35
Available for registered mail and insured Priority Mail International parcels only.

Seychelles

Country Conditions for Mailing

Prohibitions (130)
Arms and weapons except under license.
Coins; banknotes; currency notes (paper money); securities payable to bearer; traveler checks; platinum, gold, and silver, manufactured or not; precious stones; jewelry; and other valuable articles.
Radioactive materials.

Restrictions
No list furnished.

Observations
None

Customs Forms Required (123)
First-Class Mail International items and Priority Mail International Flat Rate Envelopes and Small Flat Rate Priced Boxes:
PS Form 2976 (see 123.61)
Priority Mail International parcels:
PS Form 2976-A inside 2976-E (envelope)

Global Express Guaranteed (210) Price Group 4

Refer to Notice 123, *Price List*, for the applicable retail, commercial base, or commercial plus price.
Weight Limit: 70 lbs.

Insurance (212.5)

Insured Amount not over	Fee	Insured Amount not over	Fee
$100	No Fee	For document reconstruction insurance or non-document insurance coverage above $800, add $1.00 per $100 or fraction thereof, up to a maximum of $2,499 per shipment.	
200	$1.00		
300	2.00		
400	3.00		
500	4.00		
600	5.00		
700	6.00		
800	7.00	$2,499 max.	$24.00

Value Limit (212.1)
The maximum value of a GXG shipment to this country is $2,499 or a lesser amount if limited by content or value.

Size Limits (211.22)
The surface area of the address side of the item to be mailed must be large enough to completely contain the Global Express Guaranteed Air Waybill/Shipping Invoice (shipping label), postage, endorsement, and any applicable markings. The shipping label is approximately 5.5 inches high and 9.5 inches long.
Maximum length: 46 inches
Maximum width: 35 inches
Maximum height: 46 inches
Maximum length and girth combined: 108 inches

General Conditions for Mailing
See Publication 141, *Global Express Guaranteed Service Guide,* for information about areas served in the destination country, allowable contents, packaging and labeling requirements, tracking and tracing, service standards, and other conditions for mailing.

Express Mail International (220) Price Group 7

Refer to Notice 123, *Price List*, for the applicable retail, commercial base, or commercial plus price.
Weight Limit: 66 lbs.

Express Mail International — Flat Rate Envelope and Flat Rate Boxes
The maximum weight for the Express Mail International Flat Rate Envelope and the Express Mail International Flat Rate Boxes is 20 pounds. Refer to Notice 123, *Price List*, for the applicable retail, commercial base, or commercial plus price.

Insurance (222.8)
Available for **Express Mail International merchandise shipments** only

Insured Amount not over	Fee	Insured Amount not over	Fee
$100	No Fee	For insurance coverage above $2,000, add $1.50 for each $500 or fraction thereof, up to a maximum of $5,000 per shipment.	
200	$0.85		
500	2.35		
1,000	3.85		
1,500	5.35		
2,000	6.85	$5,000 max.	$15.85

Articles Admitted	Required Customs Form/Endorsement
Correspondence and business papers.	PS Form 2976, *Customs — CN 22 and Sender's Declaration.* Endorse item clearly next to mailing label as BUSINESS PAPERS.
Merchandise samples without commercial value.	PS Form 2976, *Customs — CN 22 and Sender's Declaration.*
Merchandise and all articles subject to customs duty.	PS Form 2976-A, *Customs Declaration and Dispatch Note CP 72,* inside a PS Form 2976-E, *Customs Declaration Envelope CP 91.*

Size Limits (221.52)
Maximum length: 36 inches
Maximum length and girth combined: 79 inches

Notes:
1. A commercial invoice must be included with all commercial shipments.
2. Coins; banknotes; currency notes, including paper money; securities of any kind payable to bearer; traveler's checks; platinum, gold, and silver; precious stones; jewelry; watches; and other valuable articles are prohibited in Express Mail International shipments to the Seychelles.

Reciprocal Service Name: EMS Seychelles

Country Code: SC

Areas Served:
All locations. Streets have no name and houses have no number except in Victoria. It is common for addresses to consist of only the names of the addressee, district, island, and country. If the addressee has a private box, it would be best to use it, but the item can be delivered without it.

Priority Mail International (230) Price Group 7

Refer to Notice 123, *Price List*, for the applicable retail, commercial base, or commercial plus price.
Weight Limit: 70 lbs.

Note: *Ordinary Priority Mail International includes indemnity at no cost based on weight. (See 230.)*

Priority Mail International — Flat Rate

Flat Rate Envelopes or Small Flat Rate Priced Boxes: The maximum weight is 4 pounds. Refer to Notice 123, *Price List*, for the applicable retail, commercial base, or commercial plus price.

Flat Rate Boxes — Medium and Large: The maximum weight is 20 pounds, or the limit set by the individual country, whichever is less. Refer to Notice 123, *Price List*, for the retail, commercial base, or commercial plus price.

Insurance (232.92) NOT Available

Size Limits (231.22)

Maximum length: 42 inches
Maximum length and girth combined: 79 inches

First-Class Mail International (240) Price Group 7

For the prices and maximum weights for letters, large envelopes (flats), packages (small packets), and postcards, see Notice 123, *Price List*.

Size Limits

Letters: See 241.212
Postcards: See 241.221
Large Envelopes (Flats): See 241.232
Packages (Small Packets): See 241.242 and 241.243

Airmail M-bags (260) — Direct Sack to One Addressee Price Group 7

Refer to Notice 123, *Price List*, for the applicable retail, commercial base, or commercial plus price.
Weight Limit: 66 lbs.

Matter for the Blind (270)

Free when sent as First-Class Mail International, including Priority Mail International Flat Rate Envelopes and Small Flat Rate Priced Boxes. Weight limit: 4 pounds.
Free when sent as Priority Mail International. Weight limit: 15 pounds.

Extra Services

Certificate of Mailing (313)

Individual Pieces	Fee
Individual article (PS Form 3817)	$1.15
Firm mailing books (PS Form 3877), per article listed (minimum 3)	0.44
Duplicate copy of PS Form 3817 or PS Form 3877 (per page)	1.15
Bulk Quantities	**Fee**
First 1,000 pieces (or fraction thereof)	$6.70
Each additional 1,000 pieces (or fraction thereof)	0.80
Duplicate copy of PS Form 3606	1.15

COD and Certified **NOT** for International Mail

International Business Reply Service (382)

Fee: Envelopes up to 2 ounces $1.50; Cards $1.00

International Postal Money Order (371)

NOT Available

International Reply Coupons (381) **Fee:** $2.20

Registered Mail (330) **Fee:** $11.75

Maximum Indemnity: $47.33
Available for First-Class Mail International, including postcards and Flat Rate Envelopes and Small Flat Rate Priced Boxes, and matter for the blind or other physically handicapped persons. Not applicable to M-bags.

Restricted Delivery (350) **Fee:** $4.55

Available for registered mail with a return receipt.
Endorsements: A remettre en main propre.

Return Receipt (340) **Fee:** $2.35

Available for registered mail only.

Sierra Leone

Country Conditions for Mailing

Prohibitions (130)

Banknotes, checks, and securities of any kind payable to bearer in ordinary and registered First-Class Mail International items.
Brushes of all kinds made in Japan other than nylon toothbrushes.
Distilling apparatus.
Postage stamps, whether used or not, except in registered First-Class Mail International shipments.
West African paper currency.

Restrictions

Arms and munitions require a license from the Governor.
Coins or precious metal sent in registered First-Class Mail International shipments may not exceed L5 in value.

Observations

None

Customs Forms Required (123)

First-Class Mail International items and Priority Mail International Flat Rate Envelopes and Small Flat Rate Priced Boxes:
PS Form 2976 (see 123.61)
Priority Mail International parcels:
PS Form 2976-A inside 2976-E (envelope)

Global Express Guaranteed (210)

Not Available

Express Mail International (220) **Price Group 7**

Refer to Notice 123, *Price List*, for the applicable retail, commercial base, or commercial plus price.
Weight Limit: 66 lbs.

Express Mail International — Flat Rate Envelope and Flat Rate Boxes

The maximum weight for the Express Mail International Flat Rate Envelope and the Express Mail International Flat Rate Boxes is 20 pounds. Refer to Notice 123, *Price List*, for the applicable retail, commercial base, or commercial plus price.

Insurance (222.8)

Available for **Express Mail International merchandise shipments** only

Insured Amount not over	Fee	Insured Amount not over	Fee
$100	No Fee	For insurance coverage above $2,000, add $1.50 for each $500 or fraction thereof, up to a maximum of $5,000 per shipment.	
200	$0.85		
500	2.35		
1,000	3.85		
1,500	5.35		
2,000	6.85	$5,000 max.	$15.85

Articles Admitted	Required Customs Form/Endorsement
Correspondence, business papers, computer data, and advertising material.	PS Form 2976, *Customs — CN 22 and Sender's Declaration.* Endorse item clearly next to mailing label as BUSINESS PAPERS.
Merchandise samples without commercial value.	PS Form 2976, *Customs — CN 22 and Sender's Declaration.*
Merchandise and all articles subject to customs duty.	PS Form 2976-A, *Customs Declaration and Dispatch Note CP 72,* inside a PS Form 2976-E, *Customs Declaration Envelope CP 91.*

Size Limits (221.52)

Maximum length: 36 inches
Maximum length and girth combined: 79 inches

Note:

Coins; banknotes; currency notes, including paper money; securities of any kind payable to bearer; traveler's checks; platinum, gold, and silver; precious stones; jewelry; watches; and other valuable articles are prohibited in Express Mail International shipments to Sierra Leone.

Reciprocal Service Name: Express Mail Service (EMS)

(**Note:** Service is available to Sierra Leone but not from it.)

Country Code: SL

Areas Served:

Bo
Freetown
Kenema
Kono
Makeni

Priority Mail International (230) **Price Group 7**

Refer to Notice 123, *Price List*, for the applicable retail, commercial base, or commercial plus price.
Weight Limit: 66 lbs.

Note: *Ordinary Priority Mail International includes indemnity at no cost based on weight. (See 230.)*

Priority Mail International — Flat Rate

Flat Rate Envelopes or Small Flat Rate Priced Boxes: The maximum weight is 4 pounds. Refer to Notice 123, *Price List*, for the applicable retail, commercial base, or commercial plus price.

Flat Rate Boxes — Medium and Large: The maximum weight is 20 pounds, or the limit set by the individual country, whichever is less. Refer to Notice 123, *Price List*, for the retail, commercial base, or commercial plus price.

Insurance (232.92) NOT Available

Size Limits (231.22)

Maximum length: 42 inches
Maximum length and girth combined: 79 inches

First-Class Mail International (240) Price Group 7

For the prices and maximum weights for letters, large envelopes (flats), packages (small packets), and postcards, see Notice 123, *Price List*.

Size Limits

Letters: See 241.212
Postcards: See 241.221
Large Envelopes (Flats): See 241.232
Packages (Small Packets): See 241.242 and 241.243

Airmail M-bags (260) — Direct Sack to One Addressee Price Group 7

Refer to Notice 123, *Price List*, for the applicable retail, commercial base, or commercial plus price.
Weight Limit: 66 lbs.

Matter for the Blind (270)

Free when sent as First-Class Mail International, including Priority Mail International Flat Rate Envelopes and Small Flat Rate Priced Boxes. Weight limit: 4 pounds.
Free when sent as Priority Mail International. Weight limit: 15 pounds.

Extra Services

Certificate of Mailing (313)

Individual Pieces	Fee
Individual article (PS Form 3817)	$1.15
Firm mailing books (PS Form 3877), per article listed (minimum 3)	0.44
Duplicate copy of PS Form 3817 or PS Form 3877 (per page)	1.15
Bulk Quantities	**Fee**
First 1,000 pieces (or fraction thereof)	$6.70
Each additional 1,000 pieces (or fraction thereof)	0.80
Duplicate copy of PS Form 3606	1.15

COD and Certified **NOT** for International Mail

International Business Reply Service (382)

Fee: Envelopes up to 2 ounces $1.50; Cards $1.00

International Postal Money Order (371)

Use MO Form MP1
Maximum Amount Available: $700 **Fee:** $4.45
Money Order Inquiry: **Fee:** $5.50

International Reply Coupons (381) **Fee:** $2.20

Registered Mail (330) **Fee:** $11.75

Maximum Indemnity: $47.33
Available for First-Class Mail International, including postcards and Flat Rate Envelopes and Small Flat Rate Priced Boxes, and matter for the blind or other physically handicapped persons. Not applicable to M-bags.

Restricted Delivery (350) **Fee:** $4.55

Available for registered mail with a return receipt.
Endorsements: A remettre en main propre.

Return Receipt (340) **Fee:** $2.35

Available for registered mail only.

Singapore

Country Conditions for Mailing

Prohibitions (130)

Advertisements for charms, amulets and talismans.
Arms and firearms and parts thereof.
Bullion of a value higher than $50 Singapore dollars
Butane gas lighters and refills therefor.
Coins except coins for purposes of ornament; banknotes; currency notes; traveler's checks; securities payable to bearer; precious stones; jewelry; and other valuable articles. However, unmounted precious stones may be sent in registered First-Class Mail International shipments if authorization is obtained from the Postmaster General of Singapore.
Lotteries and advertisements concerning lotteries.

Restrictions

Meat or meat products including animal by-products require an import permit issued by Director of Primary Production, Singapore, and these articles must be addressed to the addressee care of the above Director.

Observations

Many types of merchandise require import licenses that addressees must obtain from the authorities of Singapore. Senders should be assured before mailing that the addressees can obtain licenses if needed.

Customs Forms Required (123)

First-Class Mail International items and Priority Mail International Flat Rate Envelopes and Small Flat Rate Priced Boxes:
PS Form 2976 (see 123.61)
Priority Mail International parcels:
PS Form 2976-A inside 2976-E (envelope)

Global Express Guaranteed (210) Price Group 3

Refer to Notice 123, *Price List*, for the applicable retail, commercial base, or commercial plus price.
Weight Limit: 70 lbs.

Insurance (212.5)

Insured Amount not over	Fee	Insured Amount not over	Fee
$100	No Fee	For document reconstruction insurance or non-document insurance coverage above $800, add $1.00 per $100 or fraction thereof, up to a maximum of $2,499 per shipment.	
200	$1.00		
300	2.00		
400	3.00		
500	4.00		
600	5.00		
700	6.00		
800	7.00	$2,499 max.	$24.00

Value Limit (212.1)

The maximum value of a GXG shipment to this country is $2,499 or a lesser amount if limited by content or value.

Size Limits (211.22)

The surface area of the address side of the item to be mailed must be large enough to completely contain the Global Express Guaranteed Air Waybill/Shipping Invoice (shipping label), postage, endorsement, and any applicable markings. The shipping label is approximately 5.5 inches high and 9.5 inches long.
Maximum length: 46 inches
Maximum width: 35 inches
Maximum height: 46 inches
Maximum length and girth combined: 108 inches

General Conditions for Mailing

See Publication 141, *Global Express Guaranteed Service Guide,* for information about areas served in the destination country, allowable contents, packaging and labeling requirements, tracking and tracing, service standards, and other conditions for mailing.

Express Mail International (220) Price Group 6

Refer to Notice 123, *Price List*, for the applicable retail, commercial base, or commercial plus price.
Weight Limit: 66 lbs.

Express Mail International — Flat Rate Envelope and Flat Rate Boxes

The maximum weight for the Express Mail International Flat Rate Envelope and the Express Mail International Flat Rate Boxes is 20 pounds. Refer to Notice 123, *Price List*, for the applicable retail, commercial base, or commercial plus price.

Insurance (222.8)

Available for **Express Mail International merchandise shipments** only

Insured Amount not over	Fee	Insured Amount not over	Fee
$100	No Fee	For insurance coverage above $2,000, add $1.50 for each $500 or fraction thereof, up to a maximum of $5,000 per shipment.	
200	$0.85		
500	2.35		
1,000	3.85		
1,500	5.35		
2,000	6.85	$5,000 max.	$15.85

Articles Admitted	Required Customs Form/Endorsement
Business correspondence, commercial papers, and documents.	No form required. Endorse item clearly next to mailing label as BUSINESS PAPERS.
Merchandise samples without commercial value.	PS Form 2976, *Customs — CN 22 and Sender's Declaration.*
Merchandise and all articles subject to customs duty.	PS Form 2976-A, *Customs Declaration and Dispatch Note CP 72,* inside a PS Form 2976-E, *Customs Declaration Envelope CP 91.*

Size Limits (221.52)

Maximum length: 36 inches
Maximum length and girth combined: 79 inches

Notes:

1. Unprocessed film is prohibited.
2. Coins; banknotes; currency notes, including paper money; securities of any kind payable to bearer; traveler's checks; platinum, gold, and silver; precious stones; jewelry; watches; and other valuable articles are prohibited in Express Mail International shipments to Singapore.
3. Express Mail International With Guarantee service — which offers a date-certain, postage-refund guarantee — is available to Singapore.

Reciprocal Service Name: Speedpost

Country Code: SG

Areas Served:
All, including Sentosa Island, but excluding all other offshore islands.

Priority Mail International (230) Price Group 6

Refer to Notice 123, *Price List*, for the applicable retail, commercial base, or commercial plus price.
Weight Limit: 66 lbs.

Note: *Ordinary Priority Mail International includes indemnity at no cost based on weight. (See 230.)*

Priority Mail International — Flat Rate
Flat Rate Envelopes or Small Flat Rate Priced Boxes: The maximum weight is 4 pounds. Refer to Notice 123, *Price List*, for the applicable retail, commercial base, or commercial plus price.

Flat Rate Boxes — Medium and Large: The maximum weight is 20 pounds, or the limit set by the individual country, whichever is less. Refer to Notice 123, *Price List*, for the retail, commercial base, or commercial plus price.

Insurance (232.92)
Available for **Priority Mail International merchandise parcels** only (see 323.72 for markings)

Insured Amount not over	Fee	Insured Amount not over	Fee
$50	$2.45	Add $1.15 for each additional $100 or fraction of insurance coverage.	
100	3.60		
200	4.75		
300	5.90		
400	7.05		
500	8.20	$3,000 max.	$36.95

Size Limits (231.22)
Maximum length: 42 inches
Maximum length and girth combined: 79 inches

First-Class Mail International (240) Price Group 6
For the prices and maximum weights for letters, large envelopes (flats), packages (small packets), and postcards, see Notice 123, *Price List*.

Size Limits
Letters: See 241.212
Postcards: See 241.221
Large Envelopes (Flats): See 241.232
Packages (Small Packets): See 241.242 and 241.243

Airmail M-bags (260) — Direct Sack to One Addressee Price Group 6

Refer to Notice 123, *Price List*, for the applicable retail, commercial base, or commercial plus price.
Weight Limit: 66 lbs.

Matter for the Blind (270)
Free when sent as First-Class Mail International, including Priority Mail International Flat Rate Envelopes and Small Flat Rate Priced Boxes. Weight limit: 4 pounds.
Free when sent as Priority Mail International. Weight limit: 15 pounds.

Extra Services

Certificate of Mailing (313)

Individual Pieces	Fee
Individual article (PS Form 3817)	$1.15
Firm mailing books (PS Form 3877), per article listed (minimum 3)	0.44
Duplicate copy of PS Form 3817 or PS Form 3877 (per page)	1.15
Bulk Quantities	**Fee**
First 1,000 pieces (or fraction thereof)	$6.70
Each additional 1,000 pieces (or fraction thereof)	0.80
Duplicate copy of PS Form 3606	1.15

COD and Certified
NOT for International Mail

International Business Reply Service (382)
Fee: Envelopes up to 2 ounces $1.50; Cards $1.00

International Postal Money Order (371)
NOT Available

International Reply Coupons (381)
Fee: $2.20

Registered Mail (330)
Fee: $11.75
Maximum Indemnity: $47.33
Available for First-Class Mail International, including postcards and Flat Rate Envelopes and Small Flat Rate Priced Boxes, and matter for the blind or other physically handicapped persons. Not applicable to M-bags.

Restricted Delivery (350)
NOT Available

Return Receipt (340)
Fee: $2.35
Available for registered mail and insured Priority Mail International parcels only.

Slovak Republic
(Slovakia)

Country Conditions for Mailing

Prohibitions (130)
Chain letter items.
Publications, drawings, photographs, records, sheets of music, etc., contrary to the State public order.
Perishable infectious substances.
Perishable noninfectious substances.
Radioactive materials.

Restrictions
Coins; paper money; securities and other paper values of any kind; as well as savings-bank booklets; and unmanufactured gold, silver, and platinum may be imported only by authorization of the State Bank.
Gift shipments must be sent by private individuals. Those sent by commercial firms are not admitted.
Import permits are required for gift shipments exceeding three per year for one addressee, or for any parcel exceeding 3,000 Slovak Republic crowns in value. Permits may be issued to addressees or withheld at the discretion of the customs authorities after the shipment arrives.
Medicines are admitted provided the addressee is in possession of an import permit granted by the Slovak Republic health authorities.
Philatelic articles and stamps exchanged between member philatelists must not exceed 1,000 Slovak Republic crowns in any calendar year. Gift packages containing philatelic articles are restricted to 3 per year and the shipment cannot exceed a total of 100 stamps or philatelic articles and 100 Slovak Republic crowns in value.

Observations
1. A parcel may be addressed to a street address or to a post office box. A local telephone number for the addressee should be provided when the item is addressed to a street address and must be provided when the item is addressed to a post office box.
2. Import licenses and quantity restrictions are applicable for many articles sent to the Slovak Republic. Therefore, senders should ascertain from the addressee before mailing whether the contents are permitted and whether the necessary documents are held.
3. Gift shipments for the personal use of the addressee or the addressee's family do not require an import permit if the contents do not exceed 5,000 Slovak Republic crowns. When the total exceeds 2,000 Slovak Republic crowns, the addressee must provide a gift certificate authenticated by an authorized agent in that country. Slovak Republic customs decides the value of the contents on the basis of internal prices of identical articles.
4. Articles imported in postal items are exempt from customs duties if their total value does not exceed 300 Slovak Republic crowns.

Customs Forms Required (123)
First-Class Mail International items and Priority Mail International Flat Rate Envelopes and Small Flat Rate Priced Boxes:
PS Form 2976 (see 123.61)
Priority Mail International parcels:
PS Form 2976-A inside 2976-E (envelope)

Global Express Guaranteed (210) Price Group 4

Refer to Notice 123, *Price List*, for the applicable retail, commercial base, or commercial plus price.
Weight Limit: 70 lbs.

Insurance (212.5)

Insured Amount not over	Fee	Insured Amount not over	Fee
$100	No Fee	For document reconstruction insurance or non-document insurance coverage above $800, add $1.00 per $100 or fraction thereof, up to a maximum of $2,499 per shipment.	
200	$1.00		
300	2.00		
400	3.00		
500	4.00		
600	5.00		
700	6.00		
800	7.00	$2,499 max.	$24.00

Value Limit (212.1)
The maximum value of a GXG shipment to this country is $2,499 or a lesser amount if limited by content or value.

Size Limits (211.22)
The surface area of the address side of the item to be mailed must be large enough to completely contain the Global Express Guaranteed Air Waybill/Shipping Invoice (shipping label), postage, endorsement, and any applicable markings. The shipping label is approximately 5.5 inches high and 9.5 inches long.
Maximum length: 46 inches
Maximum width: 35 inches
Maximum height: 46 inches
Maximum length and girth combined: 108 inches

General Conditions for Mailing
See Publication 141, *Global Express Guaranteed Service Guide,* for information about areas served in the destination country, allowable contents, packaging and labeling requirements, tracking and tracing, service standards, and other conditions for mailing.

Express Mail International (220) Price Group 5

Refer to Notice 123, *Price List*, for the applicable retail, commercial base, or commercial plus price.
Weight Limit: 66 lbs.

Express Mail International — Flat Rate Envelope and Flat Rate Boxes
The maximum weight for the Express Mail International Flat Rate Envelope and the Express Mail International Flat Rate Boxes is 20 pounds. Refer to Notice 123, *Price List*, for the applicable retail, commercial base, or commercial plus price.

Insurance (222.8)
Available for **Express Mail International merchandise shipments** only

Insured Amount not over	Fee
$100	No Fee
200	$0.85
500	2.35
650 max.	3.85

Articles Admitted	Required Customs Form/Endorsement
Correspondence and business papers.	PS Form 2976, *Customs — CN 22 and Sender's Declaration.* Endorse item clearly next to mailing label as BUSINESS PAPERS.
Merchandise samples without commercial value.	PS Form 2976, *Customs — CN 22 and Sender's Declaration.*
Merchandise and all articles subject to customs duty.	PS Form 2976-A, *Customs Declaration and Dispatch Note CP 72,* inside a PS Form 2976-E, *Customs Declaration Envelope CP 91.*

Size Limits (221.52)
Maximum length: 60 inches
Maximum length and girth combined: 108 inches

Notes:
1. Coins; banknotes; currency notes, including paper money; securities of any kind payable to bearer; traveler's checks; platinum, gold, and silver; precious stones; jewelry; watches; and other valuable articles are prohibited in Express Mail International shipments to the Slovak Republic.
2. An Express Mail shipment may be addressed to a street address or to a post office box. A local telephone number for the addressee should be provided when the item is addressed to a street address and must be provided when the item is addressed to a post office box.

Reciprocal Service Name: Zrychlena Posta/EMS

Country Code: SK

Areas Served: All

Priority Mail International (230) Price Group 5

Refer to Notice 123, *Price List*, for the applicable retail, commercial base, or commercial plus price.
Weight Limit: 66 lbs.

Note: *Ordinary Priority Mail International includes indemnity at no cost based on weight. (See 230.)*

Priority Mail International — Flat Rate
Flat Rate Envelopes or Small Flat Rate Priced Boxes: The maximum weight is 4 pounds. Refer to Notice 123, *Price List*, for the applicable retail, commercial base, or commercial plus price.

Flat Rate Boxes — Medium and Large: The maximum weight is 20 pounds, or the limit set by the individual country, whichever is less. Refer to Notice 123, *Price List*, for the retail, commercial base, or commercial plus price.

Insurance (232.92)
Available for **Priority Mail International merchandise parcels** only (see 323.72 for markings)

Insured Amount not over	Fee
$50	$2.45
100	3.60
200	4.75
300	5.90
400	7.05
500	8.20
600	9.35
650 max.	10.50

Size Limits (231.22)
Maximum length: 60 inches
Maximum length and girth combined: 108 inches

First-Class Mail International (240) Price Group 5
For the prices and maximum weights for letters, large envelopes (flats), packages (small packets), and postcards, see Notice 123, *Price List*.

Size Limits
Letters: See 241.212
Postcards: See 241.221
Large Envelopes (Flats): See 241.232
Packages (Small Packets): See 241.242 and 241.243

Airmail M-bags (260) — Direct Sack to One Addressee Price Group 5

Refer to Notice 123, *Price List*, for the applicable retail, commercial base, or commercial plus price.
Weight Limit: 66 lbs.

Matter for the Blind (270)
Free when sent as First-Class Mail International, including Priority Mail International Flat Rate Envelopes and Small Flat Rate Priced Boxes. Weight limit: 4 pounds.
Free when sent as Priority Mail International. Weight limit: 15 pounds.

Extra Services

Certificate of Mailing (313)

Individual Pieces	Fee
Individual article (PS Form 3817)	$1.15
Firm mailing books (PS Form 3877), per article listed (minimum 3)	0.44
Duplicate copy of PS Form 3817 or PS Form 3877 (per page)	1.15
Bulk Quantities	**Fee**
First 1,000 pieces (or fraction thereof)	$6.70
Each additional 1,000 pieces (or fraction thereof)	0.80
Duplicate copy of PS Form 3606	1.15

COD and Certified **NOT** for International Mail

International Business Reply Service (382)
Fee: Envelopes up to 2 ounces $1.50; Cards $1.00

International Postal Money Order (371)
NOT Available

International Reply Coupons (381) **Fee:** $2.20

Registered Mail (330) **Fee:** $11.75
Maximum Indemnity: $47.33
Available for First-Class Mail International, including postcards and Flat Rate Envelopes and Small Flat Rate Priced Boxes, and matter for the blind or other physically handicapped persons. Not applicable to M-bags.

Restricted Delivery (350) **Fee:** $4.55
Available for registered mail with a return receipt.
Endorsements: A remettre en main propre.

Return Receipt (340) **Fee:** $2.35
Available for registered mail and insured Priority Mail International parcels only.

Slovenia

Country Conditions for Mailing

Prohibitions (130)
No list furnished.

Restrictions
No list furnished.

Observations
No list furnished.

Customs Forms Required (123)
First-Class Mail International items and Priority Mail International Flat Rate Envelopes and Small Flat Rate Priced Boxes:
PS Form 2976 (see 123.61)
Priority Mail International parcels:
PS Form 2976-A inside 2976-E (envelope)

Global Express Guaranteed (210) Price Group 4

Refer to Notice 123, *Price List*, for the applicable retail, commercial base, or commercial plus price.
Weight Limit: 70 lbs.

Insurance (212.5)

Insured Amount not over	Fee	Insured Amount not over	Fee
$100	No Fee	For document reconstruction insurance or non-document insurance coverage above $800, add $1.00 per $100 or fraction thereof, up to a maximum of $2,499 per shipment.	
200	$1.00		
300	2.00		
400	3.00		
500	4.00		
600	5.00		
700	6.00		
800	7.00	$2,499 max.	$24.00

Value Limit (212.1)
The maximum value of a GXG shipment to this country is $2,499 or a lesser amount if limited by content or value.

Size Limits (211.22)
The surface area of the address side of the item to be mailed must be large enough to completely contain the Global Express Guaranteed Air Waybill/Shipping Invoice (shipping label), postage, endorsement, and any applicable markings. The shipping label is approximately 5.5 inches high and 9.5 inches long.
Maximum length: 46 inches
Maximum width: 35 inches
Maximum height: 46 inches
Maximum length and girth combined: 108 inches

General Conditions for Mailing
See Publication 141, *Global Express Guaranteed Service Guide,* for information about areas served in the destination country, allowable contents, packaging and labeling requirements, tracking and tracing, service standards, and other conditions for mailing.

Express Mail International (220) Price Group 5

Refer to Notice 123, *Price List*, for the applicable retail, commercial base, or commercial plus price.
Weight Limit: 66 lbs.

Express Mail International — Flat Rate Envelope and Flat Rate Boxes
The maximum weight for the Express Mail International Flat Rate Envelope and the Express Mail International Flat Rate Boxes is 20 pounds. Refer to Notice 123, *Price List*, for the applicable retail, commercial base, or commercial plus price.

Insurance (222.8)
Available for **Express Mail International merchandise shipments** only

Insured Amount not over	Fee
$100	No Fee
200	$0.85
500	2.35
650 max.	3.85

Articles Admitted	Required Customs Form/Endorsement
Correspondence and business papers.	PS Form 2976, *Customs — CN 22 and Sender's Declaration.* Endorse item clearly next to mailing label as BUSINESS PAPERS.
Merchandise samples without commercial value.	PS Form 2976, *Customs — CN 22 and Sender's Declaration.*
Merchandise and all items subject to customs duty.	PS Form 2976-A, *Customs Declaration and Dispatch Note CP 72,* inside a PS Form 2976-E, *Customs Declaration Envelope CP 91.* A commercial invoice must be enclosed in each item.

Size Limits (221.52)
Maximum length: 36 inches
Maximum length and girth combined: 79 inches

Note:
Coins; banknotes; currency notes, including paper money; securities of any kind payable to bearer; traveler's checks; platinum, gold, and silver; precious stones; jewelry; watches; and other valuable articles are prohibited in Express Mail International shipments to Slovenia.

Reciprocal Service Name: Courrier EMS

Country Code: SI

Areas Served: All

Priority Mail International (230) Price Group 5

Refer to Notice 123, *Price List*, for the applicable retail, commercial base, or commercial plus price.
Weight Limit: 66 lbs.

Note: *Ordinary Priority Mail International includes indemnity at no cost based on weight. (See 230.)*

Priority Mail International — Flat Rate

Flat Rate Envelopes or Small Flat Rate Priced Boxes: The maximum weight is 4 pounds. Refer to Notice 123, *Price List*, for the applicable retail, commercial base, or commercial plus price.

Flat Rate Boxes — Medium and Large: The maximum weight is 20 pounds, or the limit set by the individual country, whichever is less. Refer to Notice 123, *Price List*, for the retail, commercial base, or commercial plus price.

Insurance (232.92)

Available for **Priority Mail International merchandise parcels** only (see 323.72 for markings)

Insured Amount not over	Fee
$50	$2.45
100	3.60
200	4.75
300	5.90
400	7.05
500	8.20
600	9.35
650 max.	10.50

Size Limits (231.22)

Maximum length: 42 inches
Maximum length and girth combined: 79 inches

First-Class Mail International (240) Price Group 5

For the prices and maximum weights for letters, large envelopes (flats), packages (small packets), and postcards, see Notice 123, *Price List*.

Size Limits

Letters: See 241.212
Postcards: See 241.221
Large Envelopes (Flats): See 241.232
Packages (Small Packets): See 241.242 and 241.243

Airmail M-bags (260) — Direct Sack to One Addressee Price Group 5

Refer to Notice 123, *Price List*, for the applicable retail, commercial base, or commercial plus price.
Weight Limit: 66 lbs.

Matter for the Blind (270)

Free when sent as First-Class Mail International, including Priority Mail International Flat Rate Envelopes and Small Flat Rate Priced Boxes. Weight limit: 4 pounds.
Free when sent as Priority Mail International. Weight limit: 15 pounds.

Extra Services

Certificate of Mailing (313)

Individual Pieces	Fee
Individual article (PS Form 3817)	$1.15
Firm mailing books (PS Form 3877), per article listed (minimum 3)	0.44
Duplicate copy of PS Form 3817 or PS Form 3877 (per page)	1.15
Bulk Quantities	**Fee**
First 1,000 pieces (or fraction thereof)	$6.70
Each additional 1,000 pieces (or fraction thereof)	0.80
Duplicate copy of PS Form 3606	1.15

COD and Certified

NOT for International Mail

International Business Reply Service (382)

Fee: Envelopes up to 2 ounces $1.50; Cards $1.00

International Postal Money Order (371)

NOT Available

International Reply Coupons (381)

Fee: $2.20

Registered Mail (330)

Fee: $11.75

Maximum Indemnity: $47.33
Available for First-Class Mail International, including postcards and Flat Rate Envelopes and Small Flat Rate Priced Boxes, and matter for the blind or other physically handicapped persons. Not applicable to M-bags.

Restricted Delivery (350)

NOT Available

Return Receipt (340)

Fee: $2.35

Available for registered mail and insured Priority Mail International parcels only.

Solomon Islands
(Includes Santa Cruz Islands)

Country Conditions for Mailing

Prohibitions (130)
No list furnished.

Restrictions
Used clothing must be accompanied by a health certificate issued by the official health authorities.

Observations
None

Customs Forms Required (123)
First-Class Mail International items and Priority Mail International Flat Rate Envelopes and Small Flat Rate Priced Boxes:
PS Form 2976 (see 123.61)
Priority Mail International parcels:
PS Form 2976-A inside 2976-E (envelope)

Global Express Guaranteed (210)
Not Available

Express Mail International (220) Price Group 6

Refer to Notice 123, *Price List*, for the applicable retail, commercial base, or commercial plus price.
Weight Limit: 66 lbs.

Express Mail International — Flat Rate Envelope and Flat Rate Boxes
The maximum weight for the Express Mail International Flat Rate Envelope and the Express Mail International Flat Rate Boxes is 20 pounds. Refer to Notice 123, *Price List*, for the applicable retail, commercial base, or commercial plus price.

Insurance (222.8)
Available for **Express Mail International merchandise shipments** only

Insured Amount not over	Fee	Insured Amount not over	Fee
$100	No Fee	For insurance coverage above $2,000, add $1.50 for each $500 or fraction thereof, up to a maximum of $5,000 per shipment.	
200	$0.85		
500	2.35		
1,000	3.85		
1,500	5.35		
2,000	6.85	$5,000 max.	$15.85

Articles Admitted	Required Customs Form/Endorsement
Correspondence and business papers.	PS Form 2976, *Customs — CN 22 and Sender's Declaration.* Endorse item clearly next to mailing label as BUSINESS PAPERS.
Merchandise samples without commercial value and not subject to customs duty.	PS Form 2976, *Customs — CN 22 and Sender's Declaration.*
Merchandise and all articles subject to customs duty.	PS Form 2976-A, *Customs Declaration and Dispatch Note CP 72,* inside a PS Form 2976-E, *Customs Declaration Envelope CP 91.*

Size Limits (221.52)
Maximum length: 36 inches
Maximum length and girth combined: 79 inches

Note:
Coins; banknotes; currency notes, including paper money; securities of any kind payable to bearer; traveler's checks; platinum, gold, and silver; precious stones; jewelry; watches; and other valuable articles are prohibited in Express Mail International shipments to the Solomon Islands.

Reciprocal Service Name: EMS

Country Code: SB

Areas Served: All

Priority Mail International (230) Price Group 6

Refer to Notice 123, *Price List*, for the applicable retail, commercial base, or commercial plus price.
Weight Limit: 44 lbs.

Note: *Ordinary Priority Mail International includes indemnity at no cost based on weight. (See 230.)*

Priority Mail International — Flat Rate
Flat Rate Envelopes or Small Flat Rate Priced Boxes: The maximum weight is 4 pounds. Refer to Notice 123, *Price List*, for the applicable retail, commercial base, or commercial plus price.

Flat Rate Boxes — Medium and Large: The maximum weight is 20 pounds, or the limit set by the individual country, whichever is less. Refer to Notice 123, *Price List*, for the retail, commercial base, or commercial plus price.

Insurance (232.92) NOT Available

Size Limits (231.22)
Maximum length: 42 inches
Maximum length and girth combined: 79 inches

First-Class Mail International (240) Price Group 6
For the prices and maximum weights for letters, large envelopes (flats), packages (small packets), and postcards, see Notice 123, *Price List*.

Size Limits
Letters: See 241.212
Postcards: See 241.221
Large Envelopes (Flats): See 241.232
Packages (Small Packets): See 241.242 and 241.243

Airmail M-bags (260) — Direct Sack to One Addressee Price Group 6

Refer to Notice 123, *Price List*, for the applicable retail, commercial base, or commercial plus price.
Weight Limit: 66 lbs.

Matter for the Blind (270)
Free when sent as First-Class Mail International, including Priority Mail International Flat Rate Envelopes and Small Flat Rate Priced Boxes. Weight limit: 4 pounds.
Free when sent as Priority Mail International. Weight limit: 15 pounds.

Extra Services

Certificate of Mailing (313)

Individual Pieces	Fee
Individual article (PS Form 3817)	$1.15
Firm mailing books (PS Form 3877), per article listed (minimum 3)	0.44
Duplicate copy of PS Form 3817 or PS Form 3877 (per page)	1.15
Bulk Quantities	**Fee**
First 1,000 pieces (or fraction thereof)	$6.70
Each additional 1,000 pieces (or fraction thereof)	0.80
Duplicate copy of PS Form 3606	1.15

COD and Certified

NOT for International Mail

International Business Reply Service (382)

Fee: Envelopes up to 2 ounces $1.50; Cards $1.00

International Postal Money Order (371)

NOT Available

International Reply Coupons (381)

Fee: $2.20

Registered Mail (330)

Fee: $11.75

Maximum Indemnity: $47.33
Available for First-Class Mail International, including postcards and Flat Rate Envelopes and Small Flat Rate Priced Boxes, and matter for the blind or other physically handicapped persons. Not applicable to M-bags.

Restricted Delivery (350)

Fee: $4.55

Available for registered mail with a return receipt.
Endorsements: A remettre en main propre.

Return Receipt (340)

Fee: $2.35

Available for registered mail only.

Somalia

Country Conditions for Mailing

All mail services are suspended.

Prohibitions (130)

Arms and weapons except under license.
Coins; banknotes; currency; securities of any kind payable to bearer; traveler's checks; platinum, gold, and silver (manufactured or not); precious stones; jewelry; and other valuable articles, **unless they are sent in registered First-Class Mail International.**
Lottery tickets and advertisements.
Firing caps and loaded metal cartridges for small arms and artillery fuses.
Perishable infectious biological substances.
Perishable noninfectious biological substances.
Radioactive materials.

Restrictions

Cigarettes may only be sent in boxes bearing the official stamp of the Government of Somalia and if each cigarette has the word "Somalia" printed on its paper wrapper.
Radios and telephones may only be imported by the Somali government.
Weapons and weapon parts may only be sent under government license.

Observations

None.

Customs Forms Required (123)

First-Class Mail International items and Priority Mail International Flat Rate Envelopes and Small Flat Rate Priced Boxes:
PS Form 2976 (see 123.61)
Priority Mail International parcels:
PS Form 2976-A inside 2976-E (envelope)

Global Express Guaranteed (210)

Not Available

Express Mail International (220)

Not Available

Priority Mail International (230)

Not Available

First-Class Mail International (240)

Not Available

Extra Services

Not Available

South Africa

Country Conditions for Mailing

Prohibitions (130)
Articles relating to lotteries.
Charged butane gas lighters and refills.
Cigarettes exceeding 2 kg per thousand in weight.
Diamonds or precious stones except in registered First-Class Mail International shipments.
Honey.
Prison-made articles.

Restrictions
None

Observations
1. Import licenses are required for many types of goods. Therefore, senders should ascertain from the addressee before mailing whether the necessary documents are held.
2. Licenses are not required for bona fide gifts not exceeding R 200 (Rand) in value.
3. Coins; banknotes; currency notes (paper money); traveler's checks; platinum, gold, and silver (manufactured or not); precious stones; jewelry; and other valuable articles are admitted only in Registered Mail.

Customs Forms Required (123)
First-Class Mail International items and Priority Mail International Flat Rate Envelopes and Small Flat Rate Priced Boxes:
PS Form 2976 (see 123.61)
Priority Mail International parcels:
PS Form 2976-A inside 2976-E (envelope)

Global Express Guaranteed (210) Price Group 4

Refer to Notice 123, *Price List*, for the applicable retail, commercial base, or commercial plus price.
Weight Limit: 70 lbs.

Insurance (212.5)

Insured Amount not over	Fee	Insured Amount not over	Fee
$100	No Fee	For document reconstruction insurance or non-document insurance coverage above $800, add $1.00 per $100 or fraction thereof, up to a maximum of $2,499 per shipment.	
200	$1.00		
300	2.00		
400	3.00		
500	4.00		
600	5.00		
700	6.00		
800	7.00	$2,499 max.	$24.00

Value Limit (212.1)
The maximum value of a GXG shipment to this country is $2,499 or a lesser amount if limited by content or value.

Size Limits (211.22)
The surface area of the address side of the item to be mailed must be large enough to completely contain the Global Express Guaranteed Air Waybill/Shipping Invoice (shipping label), postage, endorsement, and any applicable markings. The shipping label is approximately 5.5 inches high and 9.5 inches long.
Maximum length: 46 inches
Maximum width: 35 inches
Maximum height: 46 inches
Maximum length and girth combined: 108 inches

General Conditions for Mailing
See Publication 141, *Global Express Guaranteed Service Guide,* for information about areas served in the destination country, allowable contents, packaging and labeling requirements, tracking and tracing, service standards, and other conditions for mailing.

Express Mail International (220) Price Group 7

Refer to Notice 123, *Price List*, for the applicable retail, commercial base, or commercial plus price.
Weight Limit: 66 lbs.

Express Mail International — Flat Rate Envelope and Flat Rate Boxes
The maximum weight for the Express Mail International Flat Rate Envelope and the Express Mail International Flat Rate Boxes is 20 pounds. Refer to Notice 123, *Price List*, for the applicable retail, commercial base, or commercial plus price.

Insurance (222.8)
Available for **Express Mail International merchandise shipments** only

Insured Amount not over	Fee	Insured Amount not over	Fee
$100	No Fee	For insurance coverage above $2,000, add $1.50 for each $500 or fraction thereof, up to a maximum of $5,000 per shipment.	
200	$0.85		
500	2.35		
1,000	3.85		
1,500	5.35		
2,000	6.85	$5,000 max.	$15.85

Articles Admitted	Required Customs Form/Endorsement
Business documents, business letters, and commercial papers.	No form required. Endorse item clearly next to mailing label as BUSINESS PAPERS.
Merchandise samples without commercial value, microfilm, microfiche, and private letters.	PS Form 2976, *Customs — CN 22 and Sender's Declaration.*
Merchandise, advertising materials, and all articles subject to customs duty.	PS Form 2976-A, *Customs Declaration and Dispatch Note CP 72,* inside a PS Form 2976-E, *Customs Declaration Envelope CP 91.* Identify contents completely and state whether an import license, if required, is attached.

Size Limits (221.52)
Maximum length: 36 inches
Maximum length and girth combined: 79 inches

Notes:
1. Coins; banknotes; currency notes, including paper money; securities of any kind payable to bearer; traveler's checks; platinum, gold, and silver; precious stones; jewelry; watches; and other valuable articles are prohibited in Express Mail International shipments to South Africa.
2. Items will be accepted and delivered to private post office boxes; however, it is preferred that items be addressed to street addresses.

Reciprocal Service Name: Priority Mail

Country Code: ZA

Areas Served:

Bloemfontein
Capetown
Durban
East London
Germiston
Johannesburg
Kimberly
Port Elizabeth
Pretoria
Randsburg (Postal Codes 2125 and 2194 within the delivery area for Johannesburg)
Sandton City (Postal Codes 2146 and 2199)

Priority Mail International (230) Price Group 7

Refer to Notice 123, *Price List*, for the applicable retail, commercial base, or commercial plus price.
Weight Limit: 66 lbs.

Note: *Ordinary Priority Mail International includes indemnity at no cost based on weight. (See 230.)*

Priority Mail International — Flat Rate

Flat Rate Envelopes or Small Flat Rate Priced Boxes: The maximum weight is 4 pounds. Refer to Notice 123, *Price List*, for the applicable retail, commercial base, or commercial plus price.

Flat Rate Boxes — Medium and Large: The maximum weight is 20 pounds, or the limit set by the individual country, whichever is less. Refer to Notice 123, *Price List*, for the retail, commercial base, or commercial plus price.

Insurance (232.92) NOT Available

Size Limits (231.22)

Maximum length: 42 inches
Maximum length and girth combined: 79 inches

First-Class Mail International (240) Price Group 7

For the prices and maximum weights for letters, large envelopes (flats), packages (small packets), and postcards, see Notice 123, *Price List*.

Size Limits

Letters: See 241.212
Postcards: See 241.221
Large Envelopes (Flats): See 241.232
Packages (Small Packets): See 241.242 and 241.243

Airmail M-bags (260) — Direct Sack to One Addressee Price Group 7

Refer to Notice 123, *Price List*, for the applicable retail, commercial base, or commercial plus price.
Weight Limit: 66 lbs.

Matter for the Blind (270)

Free when sent as First-Class Mail International, including Priority Mail International Flat Rate Envelopes and Small Flat Rate Priced Boxes. Weight limit: 4 pounds.
Free when sent as Priority Mail International. Weight limit: 15 pounds.

Extra Services

Certificate of Mailing (313)

Individual Pieces	Fee
Individual article (PS Form 3817)	$1.15
Firm mailing books (PS Form 3877), per article listed (minimum 3)	0.44
Duplicate copy of PS Form 3817 or PS Form 3877 (per page)	1.15
Bulk Quantities	**Fee**
First 1,000 pieces (or fraction thereof)	$6.70
Each additional 1,000 pieces (or fraction thereof)	0.80
Duplicate copy of PS Form 3606	1.15

COD and Certified **NOT** for International Mail

International Business Reply Service (382)

Fee: Envelopes up to 2 ounces $1.50; Cards $1.00

International Postal Money Order (371)

NOT Available

International Reply Coupons (381) **Fee:** $2.20

Registered Mail (330) **Fee:** $11.75

Maximum Indemnity: $47.33
Available for First-Class Mail International, including postcards and Flat Rate Envelopes and Small Flat Rate Priced Boxes, and matter for the blind or other physically handicapped persons. Not applicable to M-bags.

Restricted Delivery (350) NOT Available

Return Receipt (340) **Fee:** $2.35

Available for registered mail only.

Spain
(Includes Canary Islands)

Country Conditions for Mailing

Prohibitions (130)
Arms; ammunition; weapons; parts and components of weapons; and other related equipment.
Coins; banknotes; currency notes (paper money); traveler's checks; securities payable to bearer; platinum, gold or silver, manufactured or not; precious stones; jewelry; and other valuable articles except in insured Priority Mail International parcels.
Foodstuffs containing saccharine in any amount.
Human remains.
Live plants and animals.
Perishable infectious biological substances.
Playing cards.
Radioactive materials.
Tobacco (admitted only to the Canary Islands, Ceuta, and Melilla).

Restrictions
Used clothing must be accompanied by a certificate of disinfection.

Observations
1. A parcel may be addressed to a street address or to a post office box. A local telephone number for the addressee should be provided when the item is addressed to a street address and must be provided when the item is addressed to a post office box.
2. For parcels, an invoice, in duplicate, is required for all commercial shipments regardless of value and all personal shipments valued at $300 or more. The invoices must be affixed to the outside of the parcel or may be enclosed in PS Form 2976-E with the customs declaration.
3. Parcel service to the Canary Islands extends to the following offices only:

Agaete
Arrecife
Arucas
Galdar
Garachico
Granadilla
Gran Tarajal
Guia
Guia de Isora
Guimar
Haria
Hermigua
Icod
Ingenio
La Antigua
La Cuesta
La Laguna
La Orotava
Las Palmas
Los Llanos
Moya
Puerto Cabras
Puerto de la Cruz
Puerto Luz
Realejo Alto
San Andres y Suaces
San Bartolome Tirajana
San Mateo
San Miguel
Santa Brigida
Santa Cruz de la Palma
Santa Cruz de Tenerife
San Sebastian de la Gomera
Tacoronte
Tazacorte
Telde
Teror
Valverde del Hierro

Customs Forms Required (123)
First-Class Mail International items and Priority Mail International Flat Rate Envelopes and Small Flat Rate Priced Boxes:
PS Form 2976 (see 123.61)
Priority Mail International parcels:
PS Form 2976-A inside 2976-E (envelope)

Global Express Guaranteed (210) Price Group 5

Refer to Notice 123, *Price List*, for the applicable retail, commercial base, or commercial plus price.
Weight Limit: 70 lbs.

Insurance (212.5)

Insured Amount not over	Fee	Insured Amount not over	Fee
$100	No Fee	For document reconstruction insurance or non-document insurance coverage above $800, add $1.00 per $100 or fraction thereof, up to a maximum of $2,499 per shipment.	
200	$1.00		
300	2.00		
400	3.00		
500	4.00		
600	5.00		
700	6.00		
800	7.00	$2,499 max.	$24.00

Value Limit (212.1)
The maximum value of a GXG shipment to this country is $2,499 or a lesser amount if limited by content or value.

Size Limits (211.22)
The surface area of the address side of the item to be mailed must be large enough to completely contain the Global Express Guaranteed Air Waybill/Shipping Invoice (shipping label), postage, endorsement, and any applicable markings. The shipping label is approximately 5.5 inches high and 9.5 inches long.
Maximum length: 46 inches
Maximum width: 35 inches
Maximum height: 46 inches
Maximum length and girth combined: 108 inches

General Conditions for Mailing
See Publication 141, *Global Express Guaranteed Service Guide,* for information about areas served in the destination country, allowable contents, packaging and labeling requirements, tracking and tracing, service standards, and other conditions for mailing.

Express Mail International (220) Price Group 5

Refer to Notice 123, *Price List*, for the applicable retail, commercial base, or commercial plus price.
Weight Limit: 66 lbs.

Express Mail International — Flat Rate Envelope and Flat Rate Boxes
The maximum weight for the Express Mail International Flat Rate Envelope and the Express Mail International Flat Rate Boxes is 20 pounds. Refer to Notice 123, *Price List*, for the applicable retail, commercial base, or commercial plus price.

Insurance (222.8)
Available for **Express Mail International merchandise shipments** only

Insured Amount not over	Fee
$100	No Fee
200	$0.85
500	2.35
650 max.	3.85

Articles Admitted	Required Customs Form/Endorsement
Business correspondence, commercial papers, and documents.	No form required. Endorse item clearly next to mailing label as BUSINESS PAPERS.
Merchandise samples without commercial value, microfilm, microfiche, and private letters.	PS Form 2976, *Customs — CN 22 and Sender's Declaration.*
Merchandise, advertising materials, and all articles subject to customs duty.	PS Form 2976-A, *Customs Declaration and Dispatch Note CP 72,* inside a PS Form 2976-E, *Customs Declaration Envelope CP 91.*

Size Limits (221.52)
Maximum length: 60 inches
Maximum length and girth combined: 108 inches

Notes:
1. Coins; banknotes; currency notes, including paper money; securities of any kind payable to bearer; traveler's checks; platinum, gold, and silver; precious stones; jewelry; watches; and other valuable articles are prohibited in Express Mail International shipments to Spain.
2. Express Mail International With Guarantee service — which offers a date-certain, postage-refund guarantee — is available to Spain but not to the Canary Islands.

Reciprocal Service Name: Postal Express

Country Code: ES

Areas Served:
Entire country, including Canary Islands, Balearic Islands, and Andorra.

Priority Mail International (230) Price Group 5

Refer to Notice 123, *Price List*, for the applicable retail, commercial base, or commercial plus price.
Weight Limit: 44 lbs.

Note: *Ordinary Priority Mail International includes indemnity at no cost based on weight. (See 230.)*

Priority Mail International — Flat Rate
Flat Rate Envelopes or Small Flat Rate Priced Boxes: The maximum weight is 4 pounds. Refer to Notice 123, *Price List*, for the applicable retail, commercial base, or commercial plus price.

Flat Rate Boxes — Medium and Large: The maximum weight is 20 pounds, or the limit set by the individual country, whichever is less. Refer to Notice 123, *Price List*, for the retail, commercial base, or commercial plus price.

Insurance (232.92)
Available for **Priority Mail International merchandise parcels** only (see 323.72 for markings)

Insured Amount not over	Fee
$50	$2.45
100	3.60
200	4.75
300	5.90
400	7.05
500	8.20
600	9.35
650 max.	10.50

Size Limits (231.22)
Maximum length: 60 inches
Maximum length and girth combined: 108 inches

First-Class Mail International (240) Price Group 5
For the prices and maximum weights for letters, large envelopes (flats), packages (small packets), and postcards, see Notice 123, *Price List*.

Size Limits
Letters: See 241.212
Postcards: See 241.221
Large Envelopes (Flats): See 241.232
Packages (Small Packets): See 241.242 and 241.243

Airmail M-bags (260) — Direct Sack to One Addressee Price Group 5

Refer to Notice 123, *Price List*, for the applicable retail, commercial base, or commercial plus price.
Weight Limit: 66 lbs.

Matter for the Blind (270)
Free when sent as First-Class Mail International, including Priority Mail International Flat Rate Envelopes and Small Flat Rate Priced Boxes. Weight limit: 4 pounds.
Free when sent as Priority Mail International. Weight limit: 15 pounds.

Extra Services

Certificate of Mailing (313)

Individual Pieces	Fee
Individual article (PS Form 3817)	$1.15
Firm mailing books (PS Form 3877), per article listed (minimum 3)	0.44
Duplicate copy of PS Form 3817 or PS Form 3877 (per page)	1.15
Bulk Quantities	**Fee**
First 1,000 pieces (or fraction thereof)	$6.70
Each additional 1,000 pieces (or fraction thereof)	0.80
Duplicate copy of PS Form 3606	1.15

COD and Certified

NOT for International Mail

International Business Reply Service (382)

Fee: Envelopes up to 2 ounces $1.50; Cards $1.00

International Postal Money Order (371)

NOT Available

International Reply Coupons (381)

Fee: $2.20

Registered Mail (330)

Fee: $11.75

Maximum Indemnity: $47.33
Available for First-Class Mail International, including postcards and Flat Rate Envelopes and Small Flat Rate Priced Boxes, and matter for the blind or other physically handicapped persons. Not applicable to M-bags.

Restricted Delivery (350)

Fee: $4.55

Available for registered mail with a return receipt.
Endorsements: A remettre en main propre.

Return Receipt (340)

Fee: $2.35

Available for registered mail and insured Priority Mail International parcels only.

Sri Lanka

Country Conditions for Mailing

Prohibitions (130)

Coffee products.
Coins; banknotes; currency notes (paper money); traveler's checks; securities payable to bearer; platinum, gold or silver manufactured or not; precious stones; jewelry; and other valuable articles unless sent in insured Priority Mail International parcels.
Fish products—tinned or canned.
Leather goods (handbags, sports goods (volleyballs, footballs, etc.)).
Most foodstuffs and grains (sugar, flour, fruits, and oils).
Paper and writing products (envelopes, ink, pencils, pens, erasers, chalk, etc.).
Radios; tape recording machines and parts thereof.
Textile, apparel, haberdashery, perfume, and cosmetics.
Tobacco products.

Restrictions

No list furnished.

Observations

1. Imports into Sri Lanka are restricted not by name but by value and quantity. Any person is eligible to receive gifts other than sarees, suitings, textile, flowers, and flower plants subject to the following provisions:
   a. Import does not involve any remittance abroad.
   b. Goods are imported bona-fide for personal use.
   c. Goods are not in a commercial quantity and not for resale.
   d. Import does not involve any abuse of import regulations.
2. A license, to be obtained by the addressee in advance, is required for most goods imported by mail. Therefore, senders should ascertain from the addressee before mailing whether the necessary documents are held.
3. No license/import permit is required for bona fide gift shipments (excluding saris, clothing or textiles) provided that the value of the shipment including postage and fees, does not exceed R 250 (rupees).

Customs Forms Required (123)

First-Class Mail International items and Priority Mail International Flat Rate Envelopes and Small Flat Rate Priced Boxes:
PS Form 2976 (see 123.61)
Priority Mail International parcels:
PS Form 2976-A inside 2976-E (envelope)

Global Express Guaranteed (210) Price Group 6

Refer to Notice 123, *Price List*, for the applicable retail, commercial base, or commercial plus price.
Weight Limit: 70 lbs.

Insurance (212.5)

Insured Amount not over	Fee	Insured Amount not over	Fee
$100	No Fee	For document reconstruction insurance or non-document insurance coverage above $800, add $1.00 per $100 or fraction thereof, up to a maximum of $2,499 per shipment.	
200	$1.00		
300	2.00		
400	3.00		
500	4.00		
600	5.00		
700	6.00		
800	7.00	$2,499 max.	$24.00

Value Limit (212.1)

The maximum value of a GXG shipment to this country is $2,499 or a lesser amount if limited by content or value.

Size Limits (211.22)

The surface area of the address side of the item to be mailed must be large enough to completely contain the Global Express Guaranteed Air Waybill/Shipping Invoice (shipping label), postage, endorsement, and any applicable markings. The shipping label is approximately 5.5 inches high and 9.5 inches long.
Maximum length: 46 inches
Maximum width: 35 inches
Maximum height: 46 inches
Maximum length and girth combined: 108 inches

General Conditions for Mailing

See Publication 141, *Global Express Guaranteed Service Guide,* for information about areas served in the destination country, allowable contents, packaging and labeling requirements, tracking and tracing, service standards, and other conditions for mailing.

Express Mail International (220) Price Group 6

Refer to Notice 123, *Price List*, for the applicable retail, commercial base, or commercial plus price.
Weight Limit: 66 lbs.

Express Mail International — Flat Rate Envelope and Flat Rate Boxes

The maximum weight for the Express Mail International Flat Rate Envelope and the Express Mail International Flat Rate Boxes is 20 pounds. Refer to Notice 123, *Price List*, for the applicable retail, commercial base, or commercial plus price.

Insurance (222.8)

Available for **Express Mail International merchandise shipments** only

Insured Amount not over	Fee	Insured Amount not over	Fee
$100	No Fee	For insurance coverage above $2,000, add $1.50 for each $500 or fraction thereof, up to a maximum of $5,000 per shipment.	
200	$0.85		
500	2.35		
1,000	3.85		
1,500	5.35		
2,000	6.85	$5,000 max.	$15.85

Articles Admitted	Required Customs Form/Endorsement
Correspondence and business papers.	PS Form 2976, *Customs — CN 22 and Sender's Declaration.* Endorse item clearly next to mailing label as BUSINESS PAPERS.
Merchandise samples without commercial value.	PS Form 2976, *Customs — CN 22 and Sender's Declaration.*
Merchandise and all articles subject to customs duty.	PS Form 2976-A, *Customs Declaration and Dispatch Note CP 72,* inside a PS Form 2976-E, *Customs Declaration Envelope CP 91.*

Size Limits (221.52)

Maximum length: 36 inches
Maximum length and girth combined: 79 inches

Note:
Coins; banknotes; currency notes, including paper money; securities of any kind payable to bearer; traveler's checks; platinum, gold, and silver; precious stones; jewelry; watches; and other valuable articles are prohibited in Express Mail International shipments to Sri Lanka.

Reciprocal Service Name: EMS

Country Code: LK

Areas Served: All

Priority Mail International (230) Price Group 6

Refer to Notice 123, *Price List*, for the applicable retail, commercial base, or commercial plus price.
Weight Limit: 66 lbs.

Note: *Ordinary Priority Mail International includes indemnity at no cost based on weight. (See 230.)*

Priority Mail International — Flat Rate
Flat Rate Envelopes or Small Flat Rate Priced Boxes: The maximum weight is 4 pounds. Refer to Notice 123, *Price List*, for the applicable retail, commercial base, or commercial plus price.

Flat Rate Boxes — Medium and Large: The maximum weight is 20 pounds, or the limit set by the individual country, whichever is less. Refer to Notice 123, *Price List*, for the retail, commercial base, or commercial plus price.

Insurance (232.92)
Available for **Priority Mail International merchandise parcels** only (see 323.72 for markings)

Insured Amount not over	Fee
$35 max.	$2.45

Size Limits (231.22)
Maximum length: 42 inches
Maximum length and girth combined: 79 inches

First-Class Mail International (240) Price Group 6
For the prices and maximum weights for letters, large envelopes (flats), packages (small packets), and postcards, see Notice 123, *Price List*.

Size Limits
Letters: See 241.212
Postcards: See 241.221
Large Envelopes (Flats): See 241.232
Packages (Small Packets): See 241.242 and 241.243

Airmail M-bags (260) — Direct Sack to One Addressee Price Group 6

Refer to Notice 123, *Price List*, for the applicable retail, commercial base, or commercial plus price.
Weight Limit: 66 lbs.

Matter for the Blind (270)
Free when sent as First-Class Mail International, including Priority Mail International Flat Rate Envelopes and Small Flat Rate Priced Boxes. Weight limit: 4 pounds.
Free when sent as Priority Mail International. Weight limit: 15 pounds.

Extra Services

Certificate of Mailing (313)

Individual Pieces	Fee
Individual article (PS Form 3817)	$1.15
Firm mailing books (PS Form 3877), per article listed (minimum 3)	0.44
Duplicate copy of PS Form 3817 or PS Form 3877 (per page)	1.15
Bulk Quantities	**Fee**
First 1,000 pieces (or fraction thereof)	$6.70
Each additional 1,000 pieces (or fraction thereof)	0.80
Duplicate copy of PS Form 3606	1.15

COD and Certified **NOT** for International Mail

International Business Reply Service (382)
Fee: Envelopes up to 2 ounces $1.50; Cards $1.00

International Postal Money Order (371)
NOT Available

International Reply Coupons (381) **Fee:** $2.20

Registered Mail (330) **Fee:** $11.75
Maximum Indemnity: $47.33
Available for First-Class Mail International, including postcards and Flat Rate Envelopes and Small Flat Rate Priced Boxes, and matter for the blind or other physically handicapped persons. Not applicable to M-bags.

Restricted Delivery (350) **Fee:** $4.55
Available for registered mail with a return receipt.
Endorsements: A remettre en main propre.
Acknowledgement of Receipt.

Return Receipt (340) **Fee:** $2.35
Available for registered mail and insured Priority Mail International parcels only.

Sudan

Country Conditions for Mailing

The Office of Foreign Assets Control (OFAC) of the U.S. Department of the Treasury administers sanctions that restrict the mailing of items to certain destinations and recipients, including a broad sanctions program against Sudan. Prior to mailing any items to Sudan, mailers should refer to IMM 510 or access *www.treas.gov/ofac* for additional information.

Prohibitions (130)

Arms and their spare parts.
Coins; banknotes; currency notes (paper money); traveler's checks; securities payable to bearer; platinum, gold or silver, manufactured or not; precious stones; jewelry; and other valuable articles.
Liquids, easily liquefiable items, and glass or similarly fragile articles.
Perishable infectious biological substances.
Perishable noninfectious biological substances.
Radioactive materials.
Seditious literature.
Unginned cotton.

Restrictions

Banknotes greater than 2 Sudanese pounds in value are admitted **ONLY** in registered First-Class Mail International shipments.

Observations

Used clothing must be accompanied by a health certificate issued by the official health authorities.

Customs Forms Required (123)

First-Class Mail International items and Priority Mail International Flat Rate Envelopes and Small Flat Rate Priced Boxes:
PS Form 2976 (see 123.61)
Priority Mail International parcels:
PS Form 2976-A inside 2976-E (envelope)

Global Express Guaranteed (210)

Not Available

Express Mail International (220) Price Group 7

Refer to Notice 123, *Price List*, for the applicable retail, commercial base, or commercial plus price.
Weight Limit: 66 lbs.

Express Mail International — Flat Rate Envelope and Flat Rate Boxes

The maximum weight for the Express Mail International Flat Rate Envelope and the Express Mail International Flat Rate Boxes is 20 pounds. Refer to Notice 123, *Price List*, for the applicable retail, commercial base, or commercial plus price.

Insurance (222.8)

Note: Express Mail International merchandise insurance is not available to this country. Document reconstruction insurance coverage is provided, at no additional cost, to a maximum of $100 per shipment. See 222.72.

Articles Admitted	Required Customs Form/Endorsement
Correspondence, business papers, computer data, and advertising material.	PS Form 2976, *Customs — CN 22 and Sender's Declaration.* Endorse item clearly next to mailing label as BUSINESS PAPERS.
Merchandise samples without commercial value and not subject to customs duty.	PS Form 2976, *Customs — CN 22 and Sender's Declaration.*

Size Limits (221.52)

Maximum length: 36 inches
Maximum length and girth combined: 79 inches

Notes:

1. Merchandise and all articles subject to customs duty are prohibited in Express Mail International shipments.
2. Coins; banknotes; currency notes, including paper money; securities of any kind payable to bearer; traveler's checks; platinum, gold, and silver; precious stones; jewelry; watches; and other valuable articles are prohibited in Express Mail International shipments to Sudan.

Reciprocal Service Name: EMS

Country Code: SD

Areas Served:

Al-Obeid
Dongola
Khartoum
Kosti
Port Sudan
Wad Medani

Priority Mail International (230) Price Group 7

Refer to Notice 123, *Price List*, for the applicable retail, commercial base, or commercial plus price.
Weight Limit: 44 lbs.

Note: *Ordinary Priority Mail International includes indemnity at no cost based on weight. (See 230.)*

Priority Mail International — Flat Rate

Flat Rate Envelopes or Small Flat Rate Priced Boxes: The maximum weight is 4 pounds. Refer to Notice 123, *Price List*, for the applicable retail, commercial base, or commercial plus price.

Flat Rate Boxes — Medium and Large: The maximum weight is 20 pounds, or the limit set by the individual country, whichever is less. Refer to Notice 123, *Price List*, for the retail, commercial base, or commercial plus price.

Insurance (232.92) NOT Available

Size Limits (231.22)

Maximum length: 42 inches
Maximum length and girth combined: 79 inches

First-Class Mail International (240) Price Group 7

For the prices and maximum weights for letters, large envelopes (flats), packages (small packets), and postcards, see Notice 123, *Price List*.

Size Limits

Letters: See 241.212
Postcards: See 241.221
Large Envelopes (Flats): See 241.232
Packages (Small Packets): See 241.242 and 241.243

Airmail M-bags (260) — Direct Sack to One Addressee Price Group 7

Refer to Notice 123, *Price List*, for the applicable retail, commercial base, or commercial plus price.
Weight Limit: 66 lbs.

Matter for the Blind (270)

Free when sent as First-Class Mail International, including Priority Mail International Flat Rate Envelopes and Small Flat Rate Priced Boxes. Weight limit: 4 pounds.
Free when sent as Priority Mail International. Weight limit: 15 pounds.

Extra Services

Certificate of Mailing (313)

Individual Pieces	Fee
Individual article (PS Form 3817)	$1.15
Firm mailing books (PS Form 3877), per article listed (minimum 3)	0.44
Duplicate copy of PS Form 3817 or PS Form 3877 (per page)	1.15
Bulk Quantities	**Fee**
First 1,000 pieces (or fraction thereof)	$6.70
Each additional 1,000 pieces (or fraction thereof)	0.80
Duplicate copy of PS Form 3606	1.15

COD and Certified **NOT** for International Mail

International Business Reply Service (382)

Fee: Envelopes up to 2 ounces $1.50; Cards $1.00

International Postal Money Order (371)

NOT Available

International Reply Coupons (381) **Fee:** $2.20

Registered Mail (330) **Fee:** $11.75

Maximum Indemnity: $47.33
Available for First-Class Mail International, including postcards and Flat Rate Envelopes and Small Flat Rate Priced Boxes, and matter for the blind or other physically handicapped persons. Not applicable to M-bags.

Restricted Delivery (350) **Fee:** $4.55

Available for registered mail with a return receipt.
Endorsements: A remettre en main propre.

Return Receipt (340) **Fee:** $2.35

Available for registered mail only.

Suriname

Country Conditions for Mailing

Prohibitions (130)
Coins; banknotes; currency notes (paper money); traveler's checks; platinum, gold, or silver (manufactured or not); precious stones; jewelry; and other valuable articles, unless sent in insured Priority Mail International parcels.
Radioactive materials.

Restrictions
No list furnished.

Observations
None

Customs Forms Required (123)
First-Class Mail International items and Priority Mail International Flat Rate Envelopes and Small Flat Rate Priced Boxes:
PS Form 2976 (see 123.61)
Priority Mail International parcels:
PS Form 2976-A inside 2976-E (envelope)

Global Express Guaranteed (210) Price Group 8

Refer to Notice 123, *Price List*, for the applicable retail, commercial base, or commercial plus price.
Weight Limit: 70 lbs.

Insurance (212.5)

Insured Amount not over	Fee	Insured Amount not over	Fee
$100	No Fee	For document reconstruction insurance or non-document insurance coverage above $800, add $1.00 per $100 or fraction thereof, up to a maximum of $2,499 per shipment.	
200	$1.00		
300	2.00		
400	3.00		
500	4.00		
600	5.00		
700	6.00		
800	7.00	$2,499 max.	$24.00

Value Limit (212.1)
The maximum value of a GXG shipment to this country is $2,499 or a lesser amount if limited by content or value.

Size Limits (211.22)
The surface area of the address side of the item to be mailed must be large enough to completely contain the Global Express Guaranteed Air Waybill/Shipping Invoice (shipping label), postage, endorsement, and any applicable markings. The shipping label is approximately 5.5 inches high and 9.5 inches long.
Maximum length: 46 inches
Maximum width: 35 inches
Maximum height: 46 inches
Maximum length and girth combined: 108 inches

General Conditions for Mailing
See Publication 141, *Global Express Guaranteed Service Guide,* for information about areas served in the destination country, allowable contents, packaging and labeling requirements, tracking and tracing, service standards, and other conditions for mailing.

Express Mail International (220)
Not Available

Priority Mail International (230) Price Group 9

Refer to Notice 123, *Price List*, for the applicable retail, commercial base, or commercial plus price.
Weight Limit: 44 lbs.

Note: *Ordinary Priority Mail International includes indemnity at no cost based on weight. (See 230.)*

Priority Mail International — Flat Rate
Flat Rate Envelopes or Small Flat Rate Priced Boxes: The maximum weight is 4 pounds. Refer to Notice 123, *Price List*, for the applicable retail, commercial base, or commercial plus price.

Flat Rate Boxes — Medium and Large: The maximum weight is 20 pounds, or the limit set by the individual country, whichever is less. Refer to Notice 123, *Price List*, for the retail, commercial base, or commercial plus price.

Insurance (232.92)
Available for **Priority Mail International merchandise parcels** only (see 323.72 for markings)

Insured Amount not over	Fee
$50	$2.45
100	3.60
200	4.75
300	5.90
400	7.05
500	8.20
535 max.	9.35

Size Limits (231.22)
Maximum length: 42 inches
Maximum length and girth combined: 79 inches

First-Class Mail International (240) Price Group 9
For the prices and maximum weights for letters, large envelopes (flats), packages (small packets), and postcards, see Notice 123, *Price List*.

Size Limits
Letters: See 241.212
Postcards: See 241.221
Large Envelopes (Flats): See 241.232
Packages (Small Packets): See 241.242 and 241.243

Airmail M-bags (260) — Direct Sack to One Addressee Price Group 9

Refer to Notice 123, *Price List*, for the applicable retail, commercial base, or commercial plus price.
Weight Limit: 66 lbs.

Matter for the Blind (270)
Free when sent as First-Class Mail International, including Priority Mail International Flat Rate Envelopes and Small Flat Rate Priced Boxes. Weight limit: 4 pounds.
Free when sent as Priority Mail International. Weight limit: 15 pounds.

Extra Services

Certificate of Mailing (313)

Individual Pieces	Fee
Individual article (PS Form 3817)	$1.15
Firm mailing books (PS Form 3877), per article listed (minimum 3)	0.44
Duplicate copy of PS Form 3817 or PS Form 3877 (per page)	1.15
Bulk Quantities	**Fee**
First 1,000 pieces (or fraction thereof)	$6.70
Each additional 1,000 pieces (or fraction thereof)	0.80
Duplicate copy of PS Form 3606	1.15

COD and Certified

NOT for International Mail

International Business Reply Service (382)

Fee: Envelopes up to 2 ounces $1.50; Cards $1.00

International Postal Money Order (371)

NOT Available

International Reply Coupons (381)

Fee: $2.20

Registered Mail (330)

Fee: $11.75

Maximum Indemnity: $47.33
Available for First-Class Mail International, including postcards and Flat Rate Envelopes and Small Flat Rate Priced Boxes, and matter for the blind or other physically handicapped persons. Not applicable to M-bags.

Restricted Delivery (350)

Fee: $4.55

Available for registered mail with a return receipt.
Endorsements: A remettre en main propre.

Return Receipt (340)

Fee: $2.35

Available for registered mail and insured Priority Mail International parcels only.

Swaziland

Country Conditions for Mailing

Prohibitions (130)
Arms; ammunition, and fuses for firearms.
Butane gas cigarette lighters.
Cigarettes exceeding 2 kg per thousand pieces.
Coins, banknotes; currency notes (paper money); securities of any kind payable to bearer; traveler's checks; platinum, gold, and silver (manufactured or not); precious stones; jewelry; and other valuable articles.
Diamonds or gems (mounted or not), metallic currency, and gold in powder or in nuggets.
Honey and preparations of honey including "royal jelly," preserves sweetened with honey, and flypaper.
Perishable infectious biological substances.
Prison-made goods.
Radioactive materials.

Restrictions
No list furnished.

Observations
None

Customs Forms Required (123)
First-Class Mail International items and Priority Mail International Flat Rate Envelopes and Small Flat Rate Priced Boxes:
PS Form 2976 (see 123.61)
Priority Mail International parcels:
PS Form 2976-A inside 2976-E (envelope)

Global Express Guaranteed (210) Price Group 4

Refer to Notice 123, *Price List*, for the applicable retail, commercial base, or commercial plus price.
Weight Limit: 70 lbs.

Insurance (212.5)

Insured Amount not over	Fee	Insured Amount not over	Fee
$100	No Fee	For document reconstruction insurance or non-document insurance coverage above $800, add $1.00 per $100 or fraction thereof, up to a maximum of $2,499 per shipment.	
200	$1.00		
300	2.00		
400	3.00		
500	4.00		
600	5.00		
700	6.00		
800	7.00	$2,499 max.	$24.00

Value Limit (212.1)
The maximum value of a GXG shipment to this country is $2,499 or a lesser amount if limited by content or value.

Size Limits (211.22)
The surface area of the address side of the item to be mailed must be large enough to completely contain the Global Express Guaranteed Air Waybill/Shipping Invoice (shipping label), postage, endorsement, and any applicable markings. The shipping label is approximately 5.5 inches high and 9.5 inches long.
Maximum length: 46 inches
Maximum width: 35 inches
Maximum height: 46 inches
Maximum length and girth combined: 108 inches

General Conditions for Mailing
See Publication 141, *Global Express Guaranteed Service Guide,* for information about areas served in the destination country, allowable contents, packaging and labeling requirements, tracking and tracing, service standards, and other conditions for mailing.

Express Mail International (220) Price Group 7

Refer to Notice 123, *Price List*, for the applicable retail, commercial base, or commercial plus price.
Weight Limit: 66 lbs.

Express Mail International — Flat Rate Envelope and Flat Rate Boxes

The maximum weight for the Express Mail International Flat Rate Envelope and the Express Mail International Flat Rate Boxes is 20 pounds. Refer to Notice 123, *Price List*, for the applicable retail, commercial base, or commercial plus price.

Insurance (222.8)
Available for **Express Mail International merchandise shipments** only

Insured Amount not over	Fee	Insured Amount not over	Fee
$100	No Fee	For insurance coverage above $2,000, add $1.50 for each $500 or fraction thereof, up to a maximum of $5,000 per shipment.	
200	$0.85		
500	2.35		
1,000	3.85		
1,500	5.35		
2,000	6.85	$5,000 max.	$15.85

Articles Admitted	Required Customs Form/Endorsement
Correspondence, business papers, and documents.	PS Form 2976, *Customs — CN 22 and Sender's Declaration.* Endorse item clearly next to mailing label as BUSINESS PAPERS.
Merchandise samples without commercial value.	PS Form 2976, *Customs — CN 22 and Sender's Declaration.*
Merchandise and all articles subject to customs duty.	PS Form 2976-A, *Customs Declaration and Dispatch Note CP 72,* inside a PS Form 2976-E, *Customs Declaration Envelope CP 91.*

Size Limits (221.52)
Maximum length: 36 inches
Maximum length and girth combined: 79 inches

Note:
Coins; banknotes; currency notes, including paper money; securities of any kind payable to bearer; traveler's checks; platinum, gold, and silver; precious stones; jewelry; watches; and other valuable articles are prohibited in Express Mail International shipments to Swaziland.

Reciprocal Service Name: Priority Mail Service

Country Code: SZ

Areas Served:

Manzini
Mbabane
Mhlume
Nhlangano
Simunye
Siteki
Tshaneni

Priority Mail International (230) Price Group 7

Refer to Notice 123, *Price List*, for the applicable retail, commercial base, or commercial plus price.
Weight Limit: 44 lbs.

Note: *Ordinary Priority Mail International includes indemnity at no cost based on weight. (See 230.)*

Priority Mail International — Flat Rate
Flat Rate Envelopes or Small Flat Rate Priced Boxes: The maximum weight is 4 pounds. Refer to Notice 123, *Price List*, for the applicable retail, commercial base, or commercial plus price.

Flat Rate Boxes — Medium and Large: The maximum weight is 20 pounds, or the limit set by the individual country, whichever is less. Refer to Notice 123, *Price List*, for the retail, commercial base, or commercial plus price.

Insurance (232.92)
Available for **Priority Mail International merchandise parcels** only (see 323.72 for markings)

Insured Amount not over	Fee
$50	$2.45
100	3.60
200	4.75
300	5.90
400	7.05
500	8.20
560 max.	9.35

Size Limits (231.22)
Maximum length: 42 inches
Maximum length and girth combined: 79 inches

First-Class Mail International (240) Price Group 7
For the prices and maximum weights for letters, large envelopes (flats), packages (small packets), and postcards, see Notice 123, *Price List*.

Size Limits
Letters: See 241.212
Postcards: See 241.221
Large Envelopes (Flats): See 241.232
Packages (Small Packets): See 241.242 and 241.243

Airmail M-bags (260) — Direct Sack to One Addressee Price Group 7

Refer to Notice 123, *Price List*, for the applicable retail, commercial base, or commercial plus price.
Weight Limit: 66 lbs.

Matter for the Blind (270)
Free when sent as First-Class Mail International, including Priority Mail International Flat Rate Envelopes and Small Flat Rate Priced Boxes. Weight limit: 4 pounds.
Free when sent as Priority Mail International. Weight limit: 15 pounds.

Extra Services

Certificate of Mailing (313)

Individual Pieces	Fee
Individual article (PS Form 3817)	$1.15
Firm mailing books (PS Form 3877), per article listed (minimum 3)	0.44
Duplicate copy of PS Form 3817 or PS Form 3877 (per page)	1.15
Bulk Quantities	**Fee**
First 1,000 pieces (or fraction thereof)	$6.70
Each additional 1,000 pieces (or fraction thereof)	0.80
Duplicate copy of PS Form 3606	1.15

COD and Certified **NOT** for International Mail

International Business Reply Service (382)
Fee: Envelopes up to 2 ounces $1.50; Cards $1.00

International Postal Money Order (371)
NOT Available

International Reply Coupons (381) **Fee:** $2.20

Registered Mail (330) **Fee:** $11.75
Maximum Indemnity: $47.33
Available for First-Class Mail International, including postcards and Flat Rate Envelopes and Small Flat Rate Priced Boxes, and matter for the blind or other physically handicapped persons. Not applicable to M-bags.

Restricted Delivery (350) NOT Available

Return Receipt (340) **Fee:** $2.35
Available for registered mail and insured Priority Mail International parcels only.

Sweden

Country Conditions for Mailing

Prohibitions (130)

Arms and weapons.
Daggers and flick knives.
Firing caps and charged metal cartridges for small arms and artillery fuses.
Human remains.
Live plants and animals.
Lottery tickets and advertisements concerning lotteries.
Radioactive materials.

Restrictions

Addressees in Sweden must obtain prior authorization from the Swedish national food administration to import foodstuffs of animal origin such as meat, sausage, fat, and soups.
Articles of gold or silver must comply with Swedish regulations as to fitness.
Banknotes and coins exceeding 100 Swedish crowns in value, and securities require prior authorization of the Bank of Sweden.
Live bees must be sent direct to the Department of Bee Research of the University of Agricultural Sciences, Lantbruksuniversitetet, Forsoksavdelningen for bin, S-750 07 Uppsala, Sweden.
Pharmaceutical drugs are admitted only by authorized importers.

Observations

1. A parcel may be addressed to a street address or to a post office box. A local telephone number for the addressee should be provided when the item is addressed to a street address and must be provided when the item is addressed to a post office box.
2. For parcels, an invoice, in duplicate, is required for all commercial shipments regardless of value and all personal shipments valued at $300 or more. The invoices must be affixed to the outside of the parcel or may be enclosed in PS Form 2976-E with the customs declaration.

Customs Forms Required (123)

First-Class Mail International items and Priority Mail International Flat Rate Envelopes and Small Flat Rate Priced Boxes:
PS Form 2976 (see 123.61)
Priority Mail International parcels:
PS Form 2976-A inside 2976-E (envelope)

Global Express Guaranteed (210) Price Group 5

Refer to Notice 123, *Price List*, for the applicable retail, commercial base, or commercial plus price.
Weight Limit: 70 lbs.

Insurance (212.5)

Insured Amount not over	Fee	Insured Amount not over	Fee
$100	No Fee	For document reconstruction insurance or non-document insurance coverage above $800, add $1.00 per $100 or fraction thereof, up to a maximum of $2,499 per shipment.	
200	$1.00		
300	2.00		
400	3.00		
500	4.00		
600	5.00		
700	6.00		
800	7.00	$2,499 max.	$24.00

Value Limit (212.1)

The maximum value of a GXG shipment to this country is $2,499 or a lesser amount if limited by content or value.

Size Limits (211.22)

The surface area of the address side of the item to be mailed must be large enough to completely contain the Global Express Guaranteed Air Waybill/Shipping Invoice (shipping label), postage, endorsement, and any applicable markings. The shipping label is approximately 5.5 inches high and 9.5 inches long.
Maximum length: 46 inches
Maximum width: 35 inches
Maximum height: 46 inches
Maximum length and girth combined: 108 inches

General Conditions for Mailing

See Publication 141, *Global Express Guaranteed Service Guide,* for information about areas served in the destination country, allowable contents, packaging and labeling requirements, tracking and tracing, service standards, and other conditions for mailing.

Express Mail International (220) Price Group 5

Refer to Notice 123, *Price List*, for the applicable retail, commercial base, or commercial plus price.
Weight Limit: 66 lbs.

Express Mail International — Flat Rate Envelope and Flat Rate Boxes

The maximum weight for the Express Mail International Flat Rate Envelope and the Express Mail International Flat Rate Boxes is 20 pounds. Refer to Notice 123, *Price List*, for the applicable retail, commercial base, or commercial plus price.

Insurance (222.8)

Available for **Express Mail International merchandise shipments** only

Insured Amount not over	Fee
$100	No Fee
200	$0.85
500	2.35
650 max.	3.85

Articles Admitted	Required Customs Form/Endorsement
Business correspondence, commercial papers, and documents.	No form required. Endorse item clearly next to mailing label as BUSINESS PAPERS.
Merchandise samples without commercial value.	PS Form 2976, *Customs — CN 22 and Sender's Declaration.*
Merchandise and all articles subject to customs duty.	PS Form 2976-A, *Customs Declaration and Dispatch Note CP 72,* inside a PS Form 2976-E, *Customs Declaration Envelope CP 91.* An invoice, in duplicate, is required for all commercial shipments regardless of value and all personal shipments valued at $300 or more. The invoices must be either affixed to the outside of the parcel or enclosed in PS Form 2976-E with the customs declaration.

Size Limits (221.52)
Maximum length: 60 inches
Maximum length and girth combined: 108 inches

Notes:
1. An invoice, in duplicate, is required for all commercial shipments regardless of value and for all personal shipments valued at $300 or more. The invoices must be either affixed to the outside of the parcel or enclosed in PS Form 2976-E with the customs declaration.
2. Arms, weapons, and human remains are prohibited.
3. Coins; banknotes; currency notes, including paper money; securities of any kind payable to bearer; traveler's checks; platinum, gold, and silver; precious stones; jewelry; watches; and other valuable articles are prohibited in Express Mail International shipments to Sweden.
4. An Express Mail International shipment may be addressed to a street address or to a post office box. A local telephone number for the addressee should be provided when the item is addressed to a street address and must be provided when the item is addressed to a post office box.

Reciprocal Service Name: There is no reciprocal service.

Country Code: SE

Areas Served: All

Priority Mail International (230) Price Group 5

Refer to Notice 123, *Price List*, for the applicable retail, commercial base, or commercial plus price.
Weight Limit: 66 lbs.

Note: *Ordinary Priority Mail International includes indemnity at no cost based on weight. (See 230.)*

Priority Mail International — Flat Rate
Flat Rate Envelopes or Small Flat Rate Priced Boxes: The maximum weight is 4 pounds. Refer to Notice 123, *Price List*, for the applicable retail, commercial base, or commercial plus price.

Flat Rate Boxes — Medium and Large: The maximum weight is 20 pounds, or the limit set by the individual country, whichever is less. Refer to Notice 123, *Price List*, for the retail, commercial base, or commercial plus price.

Insurance (232.92)
Available for **Priority Mail International merchandise parcels** only (see 323.72 for markings)

Insured Amount not over	Fee
$50	$2.45
100	3.60
200	4.75
300	5.90
400	7.05
500	8.20
600	9.35
650 max.	10.50

Size Limits (231.22)
Maximum length: 60 inches
Maximum length and girth combined: 108 inches

First-Class Mail International (240) Price Group 5
For the prices and maximum weights for letters, large envelopes (flats), packages (small packets), and postcards, see Notice 123, *Price List*.

Size Limits
Letters: See 241.212
Postcards: See 241.221
Large Envelopes (Flats): See 241.232
Packages (Small Packets): See 241.242 and 241.243

Airmail M-bags (260) — Direct Sack to One Addressee Price Group 5

Refer to Notice 123, *Price List*, for the applicable retail, commercial base, or commercial plus price.
Weight Limit: 66 lbs.

Matter for the Blind (270)
Free when sent as First-Class Mail International, including Priority Mail International Flat Rate Envelopes and Small Flat Rate Priced Boxes. Weight limit: 4 pounds.
Free when sent as Priority Mail International. Weight limit: 15 pounds.

Extra Services

Certificate of Mailing (313)

Individual Pieces	Fee
Individual article (PS Form 3817)	$1.15
Firm mailing books (PS Form 3877), per article listed (minimum 3)	0.44
Duplicate copy of PS Form 3817 or PS Form 3877 (per page)	1.15
Bulk Quantities	**Fee**
First 1,000 pieces (or fraction thereof)	$6.70
Each additional 1,000 pieces (or fraction thereof)	0.80
Duplicate copy of PS Form 3606	1.15

COD and Certified **NOT** for International Mail

International Business Reply Service (382)
Fee: Envelopes up to 2 ounces $1.50; Cards $1.00

International Postal Money Order (371)
NOT Available

International Reply Coupons (381) **Fee:** $2.20

Registered Mail (330) **Fee:** $11.75
Maximum Indemnity: $47.33
Available for First-Class Mail International, including postcards and Flat Rate Envelopes and Small Flat Rate Priced Boxes, and matter for the blind or other physically handicapped persons. Not applicable to M-bags.

Restricted Delivery (350) **Fee:** $4.55
Available for registered mail with a return receipt.
Endorsements: A remettre en main propre.
Deliver to addressee in person.

Return Receipt (340) **Fee:** $2.35
Available for registered mail and insured Priority Mail International parcels only.

Switzerland

Country Conditions for Mailing

Prohibitions (130)

Arms and weapons.
Firing caps and loaded metal cartridges for portable firearms, nonexplosive parts of artillery fuses, flammable films, or articles made of celluloid.
Human remains.
Live plants and animals.
Lottery tickets and advertisements for lotteries.
Mini-spies (miniature wireless transmitters).
Radar detectors.

Restrictions

No list furnished.

Observations

1. A parcel may be addressed to a street address or to a post office box. A local telephone number for the addressee should be provided when the item is addressed to a street address and must be provided when the item is addressed to a post office box.
2. For parcels, an invoice, in duplicate, is required for all commercial shipments regardless of value and all personal shipments valued at $300 or more. The invoices must be affixed to the outside of the parcel or may be enclosed in PS Form 2976-E with the customs declaration.
3. A letter or card fully prepaid and bearing the same address as that of a Priority Mail International parcel may be tied to or otherwise securely attached to the outside of the parcel in such manner as to prevent its separation therefrom and not to interfere with the address of the parcel. Stamps to cover postage on the parcel must be affixed to the wrapper of the parcel. Stamps to pay postage on the letter must be affixed to the envelope thereof, or in the case of a postcard, to the address side of the card, preferably the upper-right portion. Priority Mail International parcels to which such letters or cards are attached are treated as parcel post.

Customs Forms Required (123)

First-Class Mail International items and Priority Mail International Flat Rate Envelopes and Small Flat Rate Priced Boxes:
PS Form 2976 (see 123.61)
Priority Mail International parcels:
PS Form 2976-A inside 2976-E (envelope)

Global Express Guaranteed (210) Price Group 5

Refer to Notice 123, *Price List*, for the applicable retail, commercial base, or commercial plus price.
Weight Limit: 70 lbs.

Insurance (212.5)

Insured Amount not over	Fee	Insured Amount not over	Fee
$100	No Fee	For document reconstruction insurance or non-document insurance coverage above $800, add $1.00 per $100 or fraction thereof, up to a maximum of $2,499 per shipment.	
200	$1.00		
300	2.00		
400	3.00		
500	4.00		
600	5.00		
700	6.00		
800	7.00	$2,499 max.	$24.00

Value Limit (212.1)

The maximum value of a GXG shipment to this country is $2,499 or a lesser amount if limited by content or value.

Size Limits (211.22)

The surface area of the address side of the item to be mailed must be large enough to completely contain the Global Express Guaranteed Air Waybill/Shipping Invoice (shipping label), postage, endorsement, and any applicable markings. The shipping label is approximately 5.5 inches high and 9.5 inches long.
Maximum length: 46 inches
Maximum width: 35 inches
Maximum height: 46 inches
Maximum length and girth combined: 108 inches

General Conditions for Mailing

See Publication 141, *Global Express Guaranteed Service Guide,* for information about areas served in the destination country, allowable contents, packaging and labeling requirements, tracking and tracing, service standards, and other conditions for mailing.

Express Mail International (220) Price Group 5

Refer to Notice 123, *Price List*, for the applicable retail, commercial base, or commercial plus price.
Weight Limit: 66 lbs.

Express Mail International — Flat Rate Envelope and Flat Rate Boxes

The maximum weight for the Express Mail International Flat Rate Envelope and the Express Mail International Flat Rate Boxes is 20 pounds. Refer to Notice 123, *Price List*, for the applicable retail, commercial base, or commercial plus price.

Insurance (222.8)

Available for **Express Mail International merchandise shipments** only

Insured Amount not over	Fee
$100	No Fee
200	$0.85
500	2.35
650 max.	3.85

Articles Admitted	Required Customs Form/Endorsement
Business correspondence and commercial papers/documents.	No form required. Endorse item clearly next to mailing label as BUSINESS PAPERS.
Merchandise samples without commercial value.	PS Form 2976, *Customs — CN 22 and Sender's Declaration.*
Merchandise and all articles subject to customs duty.	PS Form 2976-A, *Customs Declaration and Dispatch Note CP 72,* inside a PS Form 2976-E, *Customs Declaration Envelope CP 91.* An invoice, in duplicate, is required for all commercial shipments regardless of value and all personal shipments valued at $300 or more. The invoices must be either affixed to the outside of the parcel or enclosed in PS Form 2976-E with the customs declaration.

Size Limits (221.52)
Maximum length: 60 inches
Maximum length and girth combined: 108 inches

Notes:
1. An invoice, in duplicate, is required for all commercial shipments regardless of value and for all personal shipments valued at $300 or more. The invoices must be either affixed to the outside of the parcel or enclosed in PS Form 2976-E with the customs declaration.
2. Arms, weapons, and human remains are prohibited.
3. Coins; banknotes; currency notes, including paper money; securities of any kind payable to bearer; traveler's checks; platinum, gold, and silver; precious stones; jewelry; watches; and other valuable articles are prohibited in Express Mail International shipments to Switzerland.
4. An Express Mail International shipment may be addressed to a street address or to a post office box. A local telephone number for the addressee should be provided when the item is addressed to a street address and must be provided when the item is addressed to a post office box.

Reciprocal Service Name: There is no reciprocal service.

Country Code: CH

Areas Served: All points in Switzerland and Liechtenstein.

Priority Mail International (230) Price Group 5

Refer to Notice 123, *Price List*, for the applicable retail, commercial base, or commercial plus price.
Weight Limit: 66 lbs.

Note: *Ordinary Priority Mail International includes indemnity at no cost based on weight. (See 230.)*

Priority Mail International — Flat Rate
Flat Rate Envelopes or Small Flat Rate Priced Boxes: The maximum weight is 4 pounds. Refer to Notice 123, *Price List*, for the applicable retail, commercial base, or commercial plus price.

Flat Rate Boxes — Medium and Large: The maximum weight is 20 pounds, or the limit set by the individual country, whichever is less. Refer to Notice 123, *Price List*, for the retail, commercial base, or commercial plus price.

Insurance (232.92)
Available for **Priority Mail International merchandise parcels** only (see 323.72 for markings)

Insured Amount not over	Fee
$50	$2.45
100	3.60
200	4.75
300	5.90
400	7.05
500	8.20
600	9.35
650 max.	10.50

Size Limits (231.22)
Maximum length: 60 inches
Maximum length and girth combined: 108 inches

First-Class Mail International (240) Price Group 5
For the prices and maximum weights for letters, large envelopes (flats), packages (small packets), and postcards, see Notice 123, *Price List*.

Size Limits
Letters: See 241.212
Postcards: See 241.221
Large Envelopes (Flats): See 241.232
Packages (Small Packets): See 241.242 and 241.243

Airmail M-bags (260) — Direct Sack to One Addressee Price Group 5

Refer to Notice 123, *Price List*, for the applicable retail, commercial base, or commercial plus price.
Weight Limit: 66 lbs.

Matter for the Blind (270)
Free when sent as First-Class Mail International, including Priority Mail International Flat Rate Envelopes and Small Flat Rate Priced Boxes. Weight limit: 4 pounds.
Free when sent as Priority Mail International. Weight limit: 15 pounds.

Extra Services

Certificate of Mailing (313)

Individual Pieces	Fee
Individual article (PS Form 3817)	$1.15
Firm mailing books (PS Form 3877), per article listed (minimum 3)	0.44
Duplicate copy of PS Form 3817 or PS Form 3877 (per page)	1.15
Bulk Quantities	**Fee**
First 1,000 pieces (or fraction thereof)	$6.70
Each additional 1,000 pieces (or fraction thereof)	0.80
Duplicate copy of PS Form 3606	1.15

COD and Certified **NOT** for International Mail

International Business Reply Service (382)
Fee: Envelopes up to 2 ounces $1.50; Cards $1.00

International Postal Money Order (371)
NOT Available

International Reply Coupons (381) **Fee:** $2.20

Registered Mail (330) **Fee:** $11.75
Maximum Indemnity: $47.33
Available for First-Class Mail International, including postcards and Flat Rate Envelopes and Small Flat Rate Priced Boxes, and matter for the blind or other physically handicapped persons. Not applicable to M-bags.

Restricted Delivery (350) **Fee:** $4.55
Available for registered mail with a return receipt.
Endorsements: A remettre en main propre.

Return Receipt (340) **Fee:** $2.35
Available for registered mail and insured Priority Mail International parcels only.

Syrian Arab Republic (Syria)

Country Conditions for Mailing

Prohibitions (130)

Butane gas lighters and refills.
Cigarette paper and machines for manufacturing tobacco or cigarettes.
Coins; banknotes; currency notes (paper money); securities of any kind payable to bearer; traveler's checks; platinum, gold, and silver (manufactured or not); precious stones; jewelry; and other valuable articles.
Footwear of all kinds and parts thereof.
High-frequency radio receivers (above 100 megacycles).
Margarine and other kinds of artificial butter and materials for its manufacture.
Perishable infectious biological substances.
Perishable noninfectious biological substances.
Radioactive materials.
Salt.
Soap, except shaving soap.
Stockings of all kinds except wool stockings.
Television equipment.
Used articles of military clothing.
Used clothes made of silk or cotton.

Restrictions

None

Observations

1. Mail may be addressed "Syrian Arab Republic" or "Syria."
2. The post office of destination should be written in Arabic if possible, as well as in English.
3. Addressees are required to obtain import licenses for gift shipments exceeding 250 Syrian pounds in value, and for all commercial shipments.

Customs Forms Required (123)

First-Class Mail International items and Priority Mail International Flat Rate Envelopes and Small Flat Rate Priced Boxes:
PS Form 2976 (see 123.61)
Priority Mail International parcels:
PS Form 2976-A inside 2976-E (envelope)

Global Express Guaranteed (210)

Not Available

Express Mail International (220) Price Group 8

Refer to Notice 123, *Price List*, for the applicable retail, commercial base, or commercial plus price.
Weight Limit: 44 lbs.

Express Mail International — Flat Rate Envelope and Flat Rate Boxes

The maximum weight for the Express Mail International Flat Rate Envelope and the Express Mail International Flat Rate Boxes is 20 pounds. Refer to Notice 123, *Price List*, for the applicable retail, commercial base, or commercial plus price.

Insurance (222.8)

Available for **Express Mail International merchandise shipments** only

Insured Amount not over	**Fee**	**Insured Amount** not over	**Fee**
$100	No Fee	For insurance coverage above $2,000, add $1.50 for each $500 or fraction thereof, up to a maximum of $5,000 per shipment.	
200	$0.85		
500	2.35		
1,000	3.85		
1,500	5.35		
2,000	6.85	$5,000 max.	$15.85

Articles Admitted	Required Customs Form/Endorsement
Correspondence and business papers.	PS Form 2976, *Customs — CN 22 and Sender's Declaration.* Endorse item clearly next to mailing label as BUSINESS PAPERS.
Merchandise samples without commercial value and not subject to customs duty.	PS Form 2976-A, *Customs Declaration and Dispatch Note CP 72,* inside a PS Form 2976-E, *Customs Declaration Envelope CP 91.*
Merchandise and all articles subject to customs duty.	PS Form 2976-A, *Customs Declaration and Dispatch Note CP 72,* inside a PS Form 2976-E, *Customs Declaration Envelope CP 91.*

Size Limits (221.52)

Maximum length: 36 inches
Maximum length and girth combined: 79 inches

Note:

Coins; banknotes; currency notes, including paper money; securities of any kind payable to bearer; traveler's checks; platinum, gold, and silver; precious stones; jewelry; watches; and other valuable articles are prohibited in Express Mail International shipments to the Syrian Arab Republic.

Reciprocal Service Name: EMS

Country Code: SY

Areas Served: All

Priority Mail International (230) Price Group 8

Refer to Notice 123, *Price List*, for the applicable retail, commercial base, or commercial plus price.
Weight Limit: 70 lbs.

Note: *Ordinary Priority Mail International includes indemnity at no cost based on weight. (See 230.)*

Priority Mail International — Flat Rate

Flat Rate Envelopes or Small Flat Rate Priced Boxes: The maximum weight is 4 pounds. Refer to Notice 123, *Price List*, for the applicable retail, commercial base, or commercial plus price.

Flat Rate Boxes — Medium and Large: The maximum weight is 20 pounds, or the limit set by the individual country, whichever is less. Refer to Notice 123, *Price List*, for the retail, commercial base, or commercial plus price.

Insurance (232.92) NOT Available

Size Limits (231.22)
Maximum length: 42 inches
Maximum length and girth combined: 79 inches

First-Class Mail International (240) Price Group 8
For the prices and maximum weights for letters, large envelopes (flats), packages (small packets), and postcards, see Notice 123, *Price List*.

Size Limits
Letters: See 241.212
Postcards: See 241.221
Large Envelopes (Flats): See 241.232
Packages (Small Packets): See 241.242 and 241.243

Airmail M-bags (260) — Direct Sack to One Addressee Price Group 8

Refer to Notice 123, *Price List*, for the applicable retail, commercial base, or commercial plus price.
Weight Limit: 66 lbs.

Matter for the Blind (270)
Free when sent as First-Class Mail International, including Priority Mail International Flat Rate Envelopes and Small Flat Rate Priced Boxes. Weight limit: 4 pounds.
Free when sent as Priority Mail International. Weight limit: 15 pounds.

Extra Services

Certificate of Mailing (313)

Individual Pieces	Fee
Individual article (PS Form 3817)	$1.15
Firm mailing books (PS Form 3877), per article listed (minimum 3)	0.44
Duplicate copy of PS Form 3817 or PS Form 3877 (per page)	1.15
Bulk Quantities	**Fee**
First 1,000 pieces (or fraction thereof)	$6.70
Each additional 1,000 pieces (or fraction thereof)	0.80
Duplicate copy of PS Form 3606	1.15

COD and Certified **NOT** for International Mail

International Business Reply Service (382)
Fee: Envelopes up to 2 ounces $1.50; Cards $1.00

International Postal Money Order (371)
NOT Available

International Reply Coupons (381) **Fee:** $2.20

Registered Mail (330) **Fee:** $11.75
Maximum Indemnity: $47.33
Available for First-Class Mail International, including postcards and Flat Rate Envelopes and Small Flat Rate Priced Boxes, and matter for the blind or other physically handicapped persons. Not applicable to M-bags.

Restricted Delivery (350) NOT Available

Return Receipt (340) **Fee:** $2.35
Available for registered mail only.

Taiwan

Country Conditions for Mailing

Prohibitions (130)
Banknotes in "new Taiwan dollars."
Cigars, cigarettes, and prepared tobacco.
Coins over one hundred years old.
Extracts, essences, and concentrates of tea.
Radioactive materials.
Sugar, molasses, saccharine, and other sweetening substances.

Restrictions
Addressees must obtain import licenses for all items except (1) gifts not exceeding $1000 in value for personal or family use, and (2) printed books not exceeding $1000.

Observations
1. First-Class Mail International items containing dutiable articles must be registered.
2. Addresses must be complete and written when possible in Chinese characters in addition to English.
3. The Chinese postal authorities recommend the addition of Via Taiwan in the address of articles intended for the Quemoy and Matsu Islands.

Customs Forms Required (123)
First-Class Mail International items and Priority Mail International Flat Rate Envelopes and Small Flat Rate Priced Boxes:
PS Form 2976 (see 123.61)
Priority Mail International parcels:
PS Form 2976-A inside 2976-E (envelope)

Global Express Guaranteed (210) Price Group 3

Refer to Notice 123, *Price List*, for the applicable retail, commercial base, or commercial plus price.
Weight Limit: 70 lbs.

Insurance (212.5)

Insured Amount not over	Fee	Insured Amount not over	Fee
$100	No Fee	For document reconstruction insurance or non-document insurance coverage above $800, add $1.00 per $100 or fraction thereof, up to a maximum of $2,499 per shipment.	
200	$1.00		
300	2.00		
400	3.00		
500	4.00		
600	5.00		
700	6.00		
800	7.00	$2,499 max.	$24.00

Value Limit (212.1)
The maximum value of a GXG shipment to this country is $2,499 or a lesser amount if limited by content or value.

Size Limits (211.22)
The surface area of the address side of the item to be mailed must be large enough to completely contain the Global Express Guaranteed Air Waybill/Shipping Invoice (shipping label), postage, endorsement, and any applicable markings. The shipping label is approximately 5.5 inches high and 9.5 inches long.
Maximum length: 46 inches
Maximum width: 35 inches
Maximum height: 46 inches
Maximum length and girth combined: 108 inches

General Conditions for Mailing
See Publication 141, *Global Express Guaranteed Service Guide,* for information about areas served in the destination country, allowable contents, packaging and labeling requirements, tracking and tracing, service standards, and other conditions for mailing.

Express Mail International (220) Price Group 6

Refer to Notice 123, *Price List*, for the applicable retail, commercial base, or commercial plus price.
Weight Limit: 33 lbs.

Express Mail International — Flat Rate Envelope and Flat Rate Boxes
The maximum weight for the Express Mail International Flat Rate Envelope and the Express Mail International Flat Rate Boxes is 20 pounds. Refer to Notice 123, *Price List*, for the applicable retail, commercial base, or commercial plus price.

Insurance (222.8)
Available for **Express Mail International merchandise shipments** only

Insured Amount not over	Fee	Insured Amount not over	Fee
$100	No Fee	For insurance coverage above $2,000, add $1.50 for each $500 or fraction thereof, up to a maximum of $5,000 per shipment.	
200	$0.85		
500	2.35		
1,000	3.85		
1,500	5.35		
2,000	6.85	$5,000 max.	$15.85

Articles Admitted	Required Customs Form/Endorsement
Business correspondence, commercial papers, and documents.	No form required. Endorse item clearly next to mailing label as BUSINESS PAPERS.
Merchandise samples without commercial value.	PS Form 2976, *Customs — CN 22 and Sender's Declaration.*
Merchandise and all articles subject to customs duty.	PS Form 2976-A, *Customs Declaration and Dispatch Note CP 72,* inside a PS Form 2976-E, *Customs Declaration Envelope CP 91.*

Size Limits (221.52)
Maximum length: 36 inches
Maximum length and girth combined: 79 inches

Note:
Coins; banknotes; currency notes, including paper money; securities of any kind payable to bearer; traveler's checks; platinum, gold, and silver; precious stones; jewelry; watches; and other valuable articles are prohibited in Express Mail International shipments to Taiwan.

Reciprocal Service Name: Speedpost

Country Code: TW

Areas Served: All

Priority Mail International (230) Price Group 6

Refer to Notice 123, *Price List*, for the applicable retail, commercial base, or commercial plus price.
Weight Limit: 44 lbs.

Note: *Ordinary Priority Mail International includes indemnity at no cost based on weight. (See 230.)*

Priority Mail International — Flat Rate

Flat Rate Envelopes or Small Flat Rate Priced Boxes: The maximum weight is 4 pounds. Refer to Notice 123, *Price List*, for the applicable retail, commercial base, or commercial plus price.

Flat Rate Boxes — Medium and Large: The maximum weight is 20 pounds, or the limit set by the individual country, whichever is less. Refer to Notice 123, *Price List*, for the retail, commercial base, or commercial plus price.

Insurance (232.92)

Available for **Priority Mail International merchandise parcels** only (see 323.72 for markings)

Insured Amount not over	Fee	Insured Amount not over	Fee
$50	$2.45		
100	3.60	Add $1.15 for each additional $100 or fraction of insurance coverage.	
200	4.75		
300	5.90		
400	7.05		
500	8.20	$1,350 max.	$18.55

Size Limits (231.22)

Maximum length: 42 inches
Maximum length and girth combined: 79 inches

First-Class Mail International (240) Price Group 6

For the prices and maximum weights for letters, large envelopes (flats), packages (small packets), and postcards, see Notice 123, *Price List*.

Size Limits

Letters: See 241.212
Postcards: See 241.221
Large Envelopes (Flats): See 241.232
Packages (Small Packets): See 241.242 and 241.243

Airmail M-bags (260) — Direct Sack to One Addressee Price Group 6

Refer to Notice 123, *Price List*, for the applicable retail, commercial base, or commercial plus price.
Weight Limit: 66 lbs.

Matter for the Blind (270)

Free when sent as First-Class Mail International, including Priority Mail International Flat Rate Envelopes and Small Flat Rate Priced Boxes. Weight limit: 4 pounds.
Free when sent as Priority Mail International. Weight limit: 15 pounds.

Extra Services

Certificate of Mailing (313)

Individual Pieces	Fee
Individual article (PS Form 3817)	$1.15
Firm mailing books (PS Form 3877), per article listed (minimum 3)	0.44
Duplicate copy of PS Form 3817 or PS Form 3877 (per page)	1.15
Bulk Quantities	**Fee**
First 1,000 pieces (or fraction thereof)	$6.70
Each additional 1,000 pieces (or fraction thereof)	0.80
Duplicate copy of PS Form 3606	1.15

COD and Certified

NOT for International Mail

International Business Reply Service (382)

Fee: Envelopes up to 2 ounces $1.50; Cards $1.00

International Postal Money Order (371)

NOT Available

International Reply Coupons (381)

Fee: $2.20

Registered Mail (330)

Fee: $11.75

Maximum Indemnity: $47.33
Available for First-Class Mail International, including postcards and Flat Rate Envelopes and Small Flat Rate Priced Boxes, and matter for the blind or other physically handicapped persons. Not applicable to M-bags.

Restricted Delivery (350)

Fee: $4.55

Available for registered mail with a return receipt.
Endorsements: A remettre en main propre. Equivalent in Chinese.

Return Receipt (340)

Fee: $2.35

Available for registered mail and insured Priority Mail International parcels only.

Tajikistan

Country Conditions for Mailing

Prohibitions (130)

Coins; bank notes; currency notes (paper money); securities of any kind payable to bearer; traveler's checks; platinum, gold, or silver (manufactured or not); precious stones, jewelry; and other valuable articles.
Perishable infectious biological substances.
Perishable noninfectious biological substances.
Radioactive materials.

Restrictions Restrictions

None furnished.

Observations

None

Customs Forms Required (123)

First-Class Mail International items and Priority Mail International Flat Rate Envelopes and Small Flat Rate Priced Boxes:
PS Form 2976 (see 123.61)
Priority Mail International parcels:
PS Form 2976-A inside 2976-E (envelope)

Global Express Guaranteed (210)

Not Available

Express Mail International (220) **Price Group 6**

Refer to Notice 123, *Price List*, for the applicable retail, commercial base, or commercial plus price.
Weight Limit: 66 lbs.

Express Mail International — Flat Rate Envelope and Flat Rate Boxes

The maximum weight for the Express Mail International Flat Rate Envelope and the Express Mail International Flat Rate Boxes is 20 pounds. Refer to Notice 123, *Price List*, for the applicable retail, commercial base, or commercial plus price.

Insurance (222.8)

Available for **Express Mail International merchandise shipments** only

Insured Amount not over	**Fee**	**Insured Amount** not over	**Fee**
$100	No Fee	For insurance coverage above $2,000, add $1.50 for each $500 or fraction thereof, up to a maximum of $5,000 per shipment.	
200	$0.85		
500	2.35		
1,000	3.85		
1,500	5.35		
2,000	6.85	$5,000 max.	$15.85

Articles Admitted	Required Customs Form/Endorsement
Correspondence, business papers, and documents.	PS Form 2976, *Customs — CN 22 and Sender's Declaration.* Endorse item clearly next to mailing label as BUSINESS PAPERS.
Merchandise samples without commercial value.	PS Form 2976-A, *Customs Declaration and Dispatch Note CP 72,* inside a PS Form 2976-E, *Customs Declaration Envelope CP 91.*
Merchandise and all articles subject to customs duty.	PS Form 2976-A, *Customs Declaration and Dispatch Note CP 72,* inside a PS Form 2976-E, *Customs Declaration Envelope CP 91.*

Size Limits (221.52)

Maximum length: 36 inches
Maximum length and girth combined: 79 inches

Notes:

1. Addressees are required to obtain import licenses/permits to receive most goods.
2. Coins; banknotes; currency notes, including paper money; securities of any kind payable to bearer; traveler's checks; platinum, gold, and silver; precious stones; jewelry; watches; and other valuable articles are prohibited in Express Mail International shipments to Tajikistan.

Reciprocal Service Name: EMS

Country Code: TJ

Areas Served

Express Mail International is available ***only*** to the following locations:

Dushanbe
Khojend
Khorog
Kurgan-Tyube

Priority Mail International (230) **Price Group 6**

Refer to Notice 123, *Price List*, for the applicable retail, commercial base, or commercial plus price.
Weight Limit: 66 lbs.

Note: *Ordinary Priority Mail International includes indemnity at no cost based on weight. (See 230.)*

Priority Mail International — Flat Rate

Flat Rate Envelopes or Small Flat Rate Priced Boxes: The maximum weight is 4 pounds. Refer to Notice 123, *Price List*, for the applicable retail, commercial base, or commercial plus price.

Flat Rate Boxes — Medium and Large: The maximum weight is 20 pounds, or the limit set by the individual country, whichever is less. Refer to Notice 123, *Price List*, for the retail, commercial base, or commercial plus price.

Insurance (232.92)
Available for **Priority Mail International merchandise parcels** only (see 323.72 for markings)

Insured Amount not over	Fee	Insured Amount not over	Fee
$50	$2.45		
100	3.60	Add $1.15 for each additional $100 or fraction of insurance coverage.	
200	4.75		
300	5.90		
400	7.05		
500	8.20	$5,000 max.	$59.95

Size Limits (231.22)
Maximum length: 42 inches
Maximum length and girth combined: 79 inches

First-Class Mail International (240) Price Group 6
For the prices and maximum weights for letters, large envelopes (flats), packages (small packets), and postcards, see Notice 123, *Price List*.

Size Limits
Letters: See 241.212
Postcards: See 241.221
Large Envelopes (Flats): See 241.232
Packages (Small Packets): See 241.242 and 241.243

Airmail M-bags (260) — Direct Sack to One Addressee Price Group 6

Refer to Notice 123, *Price List*, for the applicable retail, commercial base, or commercial plus price.
Weight Limit: 66 lbs.

Matter for the Blind (270)
Free when sent as First-Class Mail International, including Priority Mail International Flat Rate Envelopes and Small Flat Rate Priced Boxes. Weight limit: 4 pounds.
Free when sent as Priority Mail International. Weight limit: 15 pounds.

Extra Services

Certificate of Mailing (313)

Individual Pieces	Fee
Individual article (PS Form 3817)	$1.15
Firm mailing books (PS Form 3877), per article listed (minimum 3)	0.44
Duplicate copy of PS Form 3817 or PS Form 3877 (per page)	1.15
Bulk Quantities	**Fee**
First 1,000 pieces (or fraction thereof)	$6.70
Each additional 1,000 pieces (or fraction thereof)	0.80
Duplicate copy of PS Form 3606	1.15

COD and Certified **NOT** for International Mail

International Business Reply Service (382)
Fee: Envelopes up to 2 ounces $1.50; Cards $1.00

International Postal Money Order (371)
NOT Available

International Reply Coupons (381) **Fee:** $2.20

Registered Mail (330) **Fee:** $11.75
Maximum Indemnity: $47.33
Available for First-Class Mail International, including postcards and Flat Rate Envelopes and Small Flat Rate Priced Boxes, and matter for the blind or other physically handicapped persons. Not applicable to M-bags.

Restricted Delivery (350) **Fee:** $4.55
Available for registered mail with a return receipt.
Endorsements: A remettre en main propre.

Return Receipt (340) **Fee:** $2.35
Available for registered mail and insured Priority Mail International parcels only.

Tanzania

Country Conditions for Mailing

Prohibitions (130)

Coins; banknotes; currency notes (paper money); securities of any kind payable to bearer; traveler's checks; platinum, gold, and silver (manufactured or not); precious stones; jewelry; and other valuable articles.
Firearms and ammunition of all types except under license.
Japanese shaving brushes.
Lottery tickets and advertisements concerning lotteries.
Perishable infectious biological substances.
Radioactive materials.

Restrictions

Coins must not exceed 100 shillings in value and must be sent in registered First-Class Mail International shipments.

Observations

1. Many types of merchandise intended for resale require authorization to import from the Ministry of Commerce and Cooperatives at Dar es Salaam.
2. Mailers should be assured that the addressees have such a permit or can obtain one if needed.

Customs Forms Required (123)

First-Class Mail International items and Priority Mail International Flat Rate Envelopes and Small Flat Rate Priced Boxes:
PS Form 2976 (see 123.61)
Priority Mail International parcels:
PS Form 2976-A inside 2976-E (envelope)

Global Express Guaranteed (210) Price Group 4

Refer to Notice 123, *Price List*, for the applicable retail, commercial base, or commercial plus price.
Weight Limit: 70 lbs.

Insurance (212.5)

Insured Amount not over	Fee	Insured Amount not over	Fee
$100	No Fee	For document reconstruction insurance or non-document insurance coverage above $800, add $1.00 per $100 or fraction thereof, up to a maximum of $2,499 per shipment.	
200	$1.00		
300	2.00		
400	3.00		
500	4.00		
600	5.00		
700	6.00		
800	7.00	$2,499 max.	$24.00

Value Limit (212.1)

The maximum value of a GXG shipment to this country is $2,499 or a lesser amount if limited by content or value.

Size Limits (211.22)

The surface area of the address side of the item to be mailed must be large enough to completely contain the Global Express Guaranteed Air Waybill/Shipping Invoice (shipping label), postage, endorsement, and any applicable markings. The shipping label is approximately 5.5 inches high and 9.5 inches long.
Maximum length: 46 inches
Maximum width: 35 inches
Maximum height: 46 inches
Maximum length and girth combined: 108 inches

General Conditions for Mailing

See Publication 141, *Global Express Guaranteed Service Guide,* for information about areas served in the destination country, allowable contents, packaging and labeling requirements, tracking and tracing, service standards, and other conditions for mailing.

Express Mail International (220) Price Group 7

Refer to Notice 123, *Price List*, for the applicable retail, commercial base, or commercial plus price.
Weight Limit: 66 lbs.

Express Mail International — Flat Rate Envelope and Flat Rate Boxes

The maximum weight for the Express Mail International Flat Rate Envelope and the Express Mail International Flat Rate Boxes is 20 pounds. Refer to Notice 123, *Price List*, for the applicable retail, commercial base, or commercial plus price.

Insurance (222.8)

Available for **Express Mail International merchandise shipments** only

Insured Amount not over	Fee	Insured Amount not over	Fee
$100	No Fee	For insurance coverage above $2,000, add $1.50 for each $500 or fraction thereof, up to a maximum of $5,000 per shipment.	
200	$0.85		
500	2.35		
1,000	3.85		
1,500	5.35		
2,000	6.85	$5,000 max.	$15.85

Articles Admitted	Required Customs Form/Endorsement
Correspondence, business papers, and documents.	No form required. Endorse item clearly next to mailing label as BUSINESS PAPERS.
Merchandise samples without commercial value.	PS Form 2976-A, *Customs Declaration and Dispatch Note CP 72,* inside a PS Form 2976-E, *Customs Declaration Envelope CP 91.*
Merchandise and all articles subject to customs duty.	PS Form 2976-A, *Customs Declaration and Dispatch Note CP 72,* inside a PS Form 2976-E, *Customs Declaration Envelope CP 91.*

Size Limits (221.52)

Maximum length: 36 inches
Maximum length and girth combined: 79 inches

Note:
Coins; banknotes; currency notes, including paper money; securities of any kind payable to bearer; traveler's checks; platinum, gold, and silver; precious stones; jewelry; watches; and other valuable articles are prohibited in Express Mail International shipments to Tanzania.

Reciprocal Service Name: EMS

Country Code: TZ

Areas Served:

Arusha	Moshi
Bukoba	Musoma
Dar es Salaam	Mwanza
Dodoma	Shinyanga
Iringa	Songea
Mbeya	Tanga
Morogoro	Zanzibar

Priority Mail International (230) Price Group 7

Refer to Notice 123, *Price List*, for the applicable retail, commercial base, or commercial plus price.
Weight Limit: 66 lbs.

Note: *Ordinary Priority Mail International includes indemnity at no cost based on weight. (See 230.)*

Priority Mail International — Flat Rate
Flat Rate Envelopes or Small Flat Rate Priced Boxes: The maximum weight is 4 pounds. Refer to Notice 123, *Price List*, for the applicable retail, commercial base, or commercial plus price.

Flat Rate Boxes — Medium and Large: The maximum weight is 20 pounds, or the limit set by the individual country, whichever is less. Refer to Notice 123, *Price List*, for the retail, commercial base, or commercial plus price.

Insurance (232.92)
Available for **Priority Mail International merchandise parcels** only (see 323.72 for markings)

Insured Amount not over	Fee
$50	$2.45
100	3.60
200	4.75
248 max.	5.90

Size Limits (231.22)
Maximum length: 42 inches
Maximum length and girth combined: 79 inches

First-Class Mail International (240) Price Group 7
For the prices and maximum weights for letters, large envelopes (flats), packages (small packets), and postcards, see Notice 123, *Price List*.

Size Limits
Letters: See 241.212
Postcards: See 241.221
Large Envelopes (Flats): See 241.232
Packages (Small Packets): See 241.242 and 241.243

Airmail M-bags (260) — Direct Sack to One Addressee Price Group 7

Refer to Notice 123, *Price List*, for the applicable retail, commercial base, or commercial plus price.
Weight Limit: 66 lbs.

Matter for the Blind (270)
Free when sent as First-Class Mail International, including Priority Mail International Flat Rate Envelopes and Small Flat Rate Priced Boxes. Weight limit: 4 pounds.
Free when sent as Priority Mail International. Weight limit: 15 pounds.

Extra Services

Certificate of Mailing (313)

Individual Pieces	Fee
Individual article (PS Form 3817)	$1.15
Firm mailing books (PS Form 3877), per article listed (minimum 3)	0.44
Duplicate copy of PS Form 3817 or PS Form 3877 (per page)	1.15
Bulk Quantities	**Fee**
First 1,000 pieces (or fraction thereof)	$6.70
Each additional 1,000 pieces (or fraction thereof)	0.80
Duplicate copy of PS Form 3606	1.15

COD and Certified **NOT** for International Mail

International Business Reply Service (382)
Fee: Envelopes up to 2 ounces $1.50; Cards $1.00

International Postal Money Order (371)
NOT Available

International Reply Coupons (381) **Fee:** $2.20

Registered Mail (330) **Fee:** $11.75
Maximum Indemnity: $47.33
Available for First-Class Mail International, including postcards and Flat Rate Envelopes and Small Flat Rate Priced Boxes, and matter for the blind or other physically handicapped persons. Not applicable to M-bags.

Restricted Delivery (350) NOT Available

Return Receipt (340) **Fee:** $2.35
Available for registered mail and insured Priority Mail International parcels only.

Thailand

Country Conditions for Mailing

Prohibitions (130)

Coins; banknotes; currency notes (paper money); traveler's checks; securities payable to bearer; platinum, gold or silver (manufactured or not); precious stones; jewelry; and other valuable articles.

Firing caps and charged metal cartridges for small arms and non-explosive parts of artillery fuses.

Restrictions

Firearms, air guns, and their accessories, require special authorization from the Government; however, toy air guns for children as well as firearms and air guns kept exclusively as curios may be imported without permit.

Observations

Mail can be addressed directly to refugee camps.

Customs Forms Required (123)

First-Class Mail International items and Priority Mail International Flat Rate Envelopes and Small Flat Rate Priced Boxes:
PS Form 2976 (see 123.61)

Priority Mail International parcels:
PS Form 2976-A inside 2976-E (envelope)

Global Express Guaranteed (210) Price Group 6

Refer to Notice 123, *Price List*, for the applicable retail, commercial base, or commercial plus price.
Weight Limit: 70 lbs.

Insurance (212.5)

Insured Amount not over	Fee	Insured Amount not over	Fee
$100	No Fee	For document reconstruction insurance or non-document insurance coverage above $800, add $1.00 per $100 or fraction thereof, up to a maximum of $2,499 per shipment.	
200	$1.00		
300	2.00		
400	3.00		
500	4.00		
600	5.00		
700	6.00		
800	7.00	$2,499 max.	$24.00

Value Limit (212.1)

The maximum value of a GXG shipment to this country is $2,499 or a lesser amount if limited by content or value.

Size Limits (211.22)

The surface area of the address side of the item to be mailed must be large enough to completely contain the Global Express Guaranteed Air Waybill/Shipping Invoice (shipping label), postage, endorsement, and any applicable markings. The shipping label is approximately 5.5 inches high and 9.5 inches long.

Maximum length: 46 inches
Maximum width: 35 inches
Maximum height: 46 inches
Maximum length and girth combined: 108 inches

General Conditions for Mailing

See Publication 141, *Global Express Guaranteed Service Guide,* for information about areas served in the destination country, allowable contents, packaging and labeling requirements, tracking and tracing, service standards, and other conditions for mailing.

Express Mail International (220) Price Group 6

Refer to Notice 123, *Price List*, for the applicable retail, commercial base, or commercial plus price.
Weight Limit: 66 lbs.

Express Mail International — Flat Rate Envelope and Flat Rate Boxes

The maximum weight for the Express Mail International Flat Rate Envelope and the Express Mail International Flat Rate Boxes is 20 pounds. Refer to Notice 123, *Price List*, for the applicable retail, commercial base, or commercial plus price.

Insurance (222.8)

Available for **Express Mail International merchandise shipments** only

Insured Amount not over	Fee	Insured Amount not over	Fee
$100	No Fee	For insurance coverage above $2,000, add $1.50 for each $500 or fraction thereof, up to a maximum of $5,000 per shipment.	
200	$0.85		
500	2.35		
1,000	3.85		
1,500	5.35		
2,000	6.85	$5,000 max.	$15.85

Articles Admitted	Required Customs Form/Endorsement
Business documents and letters, non-negotiable instruments, computer printouts, and cancelled checks.	No form required. Endorse item clearly next to mailing label as BUSINESS PAPERS.
Merchandise samples without commercial value, microfilm, and microfiche.	PS Form 2976, *Customs — CN 22 and Sender's Declaration.* Endorse item clearly next to mailing label as SAMPLES.
Merchandise and all articles subject to customs duty.	PS Form 2976-A, *Customs Declaration and Dispatch Note CP 72,* inside a PS Form 2976-E, *Customs Declaration Envelope CP 91.* Endorse item clearly next to mailing label as MERCHANDISE.

Size Limits (221.52)

Maximum length: 36 inches
Maximum length and girth combined: 79 inches

Note:

Coins; banknotes; currency notes, including paper money; securities of any kind payable to bearer; traveler's checks; platinum, gold, and silver; precious stones; jewelry; watches; and other valuable articles are prohibited in Express Mail International shipments to Thailand.

Reciprocal Service Name: Express Mail Service

Country Code: TH

Areas Served: All

Priority Mail International (230) Price Group 6

Refer to Notice 123, *Price List*, for the applicable retail, commercial base, or commercial plus price.
Weight Limit: 66 lbs.

Note: *Ordinary Priority Mail International includes indemnity at no cost based on weight. (See 230.)*

Priority Mail International — Flat Rate

Flat Rate Envelopes or Small Flat Rate Priced Boxes: The maximum weight is 4 pounds. Refer to Notice 123, *Price List*, for the applicable retail, commercial base, or commercial plus price.

Flat Rate Boxes — Medium and Large: The maximum weight is 20 pounds, or the limit set by the individual country, whichever is less. Refer to Notice 123, *Price List*, for the retail, commercial base, or commercial plus price.

Insurance (232.92)

Available for **Priority Mail International merchandise parcels** only (see 323.72 for markings)

Insured Amount not over	Fee	Insured Amount not over	Fee
$50	$2.45		
100	3.60	Add $1.15 for each additional $100 or fraction of insurance coverage.	
200	4.75		
300	5.90		
400	7.05		
500	8.20	$1,458 max.	$19.70

Size Limits (231.22)

Maximum length: 42 inches
Maximum length and girth combined: 79 inches

First-Class Mail International (240) Price Group 6

For the prices and maximum weights for letters, large envelopes (flats), packages (small packets), and postcards, see Notice 123, *Price List*.

Size Limits

Letters: See 241.212
Postcards: See 241.221
Large Envelopes (Flats): See 241.232
Packages (Small Packets): See 241.242 and 241.243

Airmail M-bags (260) — Direct Sack to One Addressee Price Group 6

Refer to Notice 123, *Price List*, for the applicable retail, commercial base, or commercial plus price.
Weight Limit: 66 lbs.

Matter for the Blind (270)

Free when sent as First-Class Mail International, including Priority Mail International Flat Rate Envelopes and Small Flat Rate Priced Boxes. Weight limit: 4 pounds.
Free when sent as Priority Mail International. Weight limit: 15 pounds.

Extra Services

Certificate of Mailing (313)

Individual Pieces	Fee
Individual article (PS Form 3817)	$1.15
Firm mailing books (PS Form 3877), per article listed (minimum 3)	0.44
Duplicate copy of PS Form 3817 or PS Form 3877 (per page)	1.15
Bulk Quantities	**Fee**
First 1,000 pieces (or fraction thereof)	$6.70
Each additional 1,000 pieces (or fraction thereof)	0.80
Duplicate copy of PS Form 3606	1.15

COD and Certified

NOT for International Mail

International Business Reply Service (382)

Fee: Envelopes up to 2 ounces $1.50; Cards $1.00

International Postal Money Order (371)

NOT Available

International Reply Coupons (381)

Fee: $2.20

Registered Mail (330)

Fee: $11.75

Maximum Indemnity: $47.33
Available for First-Class Mail International, including postcards and Flat Rate Envelopes and Small Flat Rate Priced Boxes, and matter for the blind or other physically handicapped persons. Not applicable to M-bags.

Restricted Delivery (350)

NOT Available

Return Receipt (340)

Fee: $2.35

Available for registered mail and insured Priority Mail International parcels only.

Togo

Country Conditions for Mailing

Prohibitions (130)

Arms, munitions, and war material.
Articles or advertisements relating to lotteries.
Banknotes; currency notes; securities payable to bearer; traveler's checks; may only be sent in registered First-Class Mail International shipments.
Coins; platinum, gold, or silver (manufactured or not); precious stones, jewelry; and other valuable articles.
Foreign silver coins.
Poniards, sword-canes, loaded canes, brass knuckles, blackjacks, and all other arms for offense.
Saccharine and similar products.
Weights and measures other than those of the decimal metric system.

Restrictions

Hunting arms require prior authorization.
Medical thermometers must bear the stamp of the Laboratory of Arts and Crafts.

Observations

None

Customs Forms Required (123)

First-Class Mail International items and Priority Mail International Flat Rate Envelopes and Small Flat Rate Priced Boxes:
PS Form 2976 (see 123.61)
Priority Mail International parcels:
PS Form 2976-A inside 2976-E (envelope)

Global Express Guaranteed (210) Price Group 4

Refer to Notice 123, *Price List*, for the applicable retail, commercial base, or commercial plus price.
Weight Limit: 70 lbs.

Insurance (212.5)

Insured Amount not over	Fee	Insured Amount not over	Fee
$100	No Fee	For document reconstruction insurance or non-document insurance coverage above $800, add $1.00 per $100 or fraction thereof, up to a maximum of $2,499 per shipment.	
200	$1.00		
300	2.00		
400	3.00		
500	4.00		
600	5.00		
700	6.00		
800	7.00	$2,499 max.	$24.00

Value Limit (212.1)

The maximum value of a GXG shipment to this country is $2,499 or a lesser amount if limited by content or value.

Size Limits (211.22)

The surface area of the address side of the item to be mailed must be large enough to completely contain the Global Express Guaranteed Air Waybill/Shipping Invoice (shipping label), postage, endorsement, and any applicable markings. The shipping label is approximately 5.5 inches high and 9.5 inches long.
Maximum length: 46 inches
Maximum width: 35 inches
Maximum height: 46 inches
Maximum length and girth combined: 108 inches

General Conditions for Mailing

See Publication 141, *Global Express Guaranteed Service Guide,* for information about areas served in the destination country, allowable contents, packaging and labeling requirements, tracking and tracing, service standards, and other conditions for mailing.

Express Mail International (220) Price Group 7

Refer to Notice 123, *Price List*, for the applicable retail, commercial base, or commercial plus price.
Weight Limit: 66 lbs.

Express Mail International — Flat Rate Envelope and Flat Rate Boxes

The maximum weight for the Express Mail International Flat Rate Envelope and the Express Mail International Flat Rate Boxes is 20 pounds. Refer to Notice 123, *Price List*, for the applicable retail, commercial base, or commercial plus price.

Insurance (222.8)

Available for **Express Mail International merchandise shipments** only

Insured Amount not over	Fee	Insured Amount not over	Fee
$100	No Fee	For insurance coverage above $2,000, add $1.50 for each $500 or fraction thereof, up to a maximum of $5,000 per shipment.	
200	$0.85		
500	2.35		
1,000	3.85		
1,500	5.35		
2,000	6.85	$5,000 max.	$15.85

Articles Admitted	Required Customs Form/Endorsement
Correspondence and business papers.	PS Form 2976, *Customs — CN 22 and Sender's Declaration.* Endorse item clearly next to mailing label as BUSINESS PAPERS.
Merchandise samples without commercial value	PS Form 2976, *Customs — CN 22 and Sender's Declaration.*
Merchandise and all articles subject to customs duty.	PS Form 2976-A, *Customs Declaration and Dispatch Note CP 72,* inside a PS Form 2976-E, *Customs Declaration Envelope CP 91.* A commercial invoice should be included with all commercial shipments.

Size Limits (221.52)

Maximum length: 36 inches
Maximum length and girth combined: 79 inches

Note:

Coins; banknotes; currency notes, including paper money; securities of any kind payable to bearer; traveler's checks; platinum, gold, and silver; precious stones; jewelry; watches; and other valuable articles are prohibited in Express Mail International shipments to Togo.

Reciprocal Service Name: EMS POSTEXPRESS

Country Code: TG

Areas Served: All

Priority Mail International (230) Price Group 7

Refer to Notice 123, *Price List*, for the applicable retail, commercial base, or commercial plus price.
Weight Limit: 70 lbs.

Note: *Ordinary Priority Mail International includes indemnity at no cost based on weight. (See 230.)*

Priority Mail International — Flat Rate

Flat Rate Envelopes or Small Flat Rate Priced Boxes: The maximum weight is 4 pounds. Refer to Notice 123, *Price List*, for the applicable retail, commercial base, or commercial plus price.

Flat Rate Boxes — Medium and Large: The maximum weight is 20 pounds, or the limit set by the individual country, whichever is less. Refer to Notice 123, *Price List*, for the retail, commercial base, or commercial plus price.

Insurance (232.92) NOT Available

Size Limits (231.22)

Maximum length: 42 inches
Maximum length and girth combined: 79 inches

First-Class Mail International (240) Price Group 7

For the prices and maximum weights for letters, large envelopes (flats), packages (small packets), and postcards, see Notice 123, *Price List*.

Size Limits

Letters: See 241.212
Postcards: See 241.221
Large Envelopes (Flats): See 241.232
Packages (Small Packets): See 241.242 and 241.243

Airmail M-bags (260) — Direct Sack to One Addressee Price Group 7

Refer to Notice 123, *Price List*, for the applicable retail, commercial base, or commercial plus price.
Weight Limit: 66 lbs.

Matter for the Blind (270) NOT Available

Extra Services

Certificate of Mailing (313)

Individual Pieces	Fee
Individual article (PS Form 3817)	$1.15
Firm mailing books (PS Form 3877), per article listed (minimum 3)	0.44
Duplicate copy of PS Form 3817 or PS Form 3877 (per page)	1.15
Bulk Quantities	**Fee**
First 1,000 pieces (or fraction thereof)	$6.70
Each additional 1,000 pieces (or fraction thereof)	0.80
Duplicate copy of PS Form 3606	1.15

COD and Certified **NOT** for International Mail

International Business Reply Service (382)

Fee: Envelopes up to 2 ounces $1.50; Cards $1.00

International Postal Money Order (371)

NOT Available

International Reply Coupons (381) **Fee:** $2.20

Registered Mail (330) **Fee:** $11.75

Maximum Indemnity: $47.33
Available for First-Class Mail International, including postcards and Flat Rate Envelopes and Small Flat Rate Priced Boxes, and matter for the blind or other physically handicapped persons. Not applicable to M-bags.

Restricted Delivery (350) NOT Available

Return Receipt (340) **Fee:** $2.35

Available for registered mail only.

Tonga

Country Conditions for Mailing

Prohibitions (130)

Firing caps and cartridges for small arms, components of non-explosive artillery fuses.
Perishable infectious biological substances.
Tobacco, cigars, cigarettes, and snuff packages over 11 lbs. or packed with other goods.

Restrictions

No list furnished.

Observations

None

Customs Forms Required (123)

First-Class Mail International items and Priority Mail International Flat Rate Envelopes and Small Flat Rate Priced Boxes:
PS Form 2976 (see 123.61)
Priority Mail International parcels:
PS Form 2976-A inside 2976-E (envelope)

Global Express Guaranteed (210) Price Group 4

Refer to Notice 123, *Price List*, for the applicable retail, commercial base, or commercial plus price.
Weight Limit: 70 lbs.

Insurance (212.5)

Insured Amount not over	Fee	Insured Amount not over	Fee
$100	No Fee	For document reconstruction insurance or non-document insurance coverage above $800, add $1.00 per $100 or fraction thereof, up to a maximum of $2,499 per shipment.	
200	$1.00		
300	2.00		
400	3.00		
500	4.00		
600	5.00		
700	6.00		
800	7.00	$2,499 max.	$24.00

Value Limit (212.1)

The maximum value of a GXG shipment to this country is $2,499 or a lesser amount if limited by content or value.

Size Limits (211.22)

The surface area of the address side of the item to be mailed must be large enough to completely contain the Global Express Guaranteed Air Waybill/Shipping Invoice (shipping label), postage, endorsement, and any applicable markings. The shipping label is approximately 5.5 inches high and 9.5 inches long.
Maximum length: 46 inches
Maximum width: 35 inches
Maximum height: 46 inches
Maximum length and girth combined: 108 inches

General Conditions for Mailing

See Publication 141, *Global Express Guaranteed Service Guide,* for information about areas served in the destination country, allowable contents, packaging and labeling requirements, tracking and tracing, service standards, and other conditions for mailing.

Express Mail International (220) Price Group 6

Refer to Notice 123, *Price List*, for the applicable retail, commercial base, or commercial plus price.
Weight Limit: 66 lbs.

Express Mail International — Flat Rate Envelope and Flat Rate Boxes

The maximum weight for the Express Mail International Flat Rate Envelope and the Express Mail International Flat Rate Boxes is 20 pounds. Refer to Notice 123, *Price List*, for the applicable retail, commercial base, or commercial plus price.

Insurance (222.8)

Available for **Express Mail International merchandise shipments** only

Insured Amount not over	Fee	Insured Amount not over	Fee
$100	No Fee	For insurance coverage above $2,000, add $1.50 for each $500 or fraction thereof, up to a maximum of $5,000 per shipment.	
200	$0.85		
500	2.35		
1,000	3.85		
1,500	5.35		
2,000	6.85	$5,000 max.	$15.85

Articles Admitted	Required Customs Form/Endorsement
Correspondence, business papers.	PS Form 2976, *Customs — CN 22 and Sender's Declaration.* Endorse item clearly next to mailing label as BUSINESS PAPERS.
Merchandise samples without commercial value, microfilm, microfiche, and magnetic tapes and discs.	PS Form 2976, *Customs — CN 22 and Sender's Declaration.*
Merchandise and all articles subject to customs duty.	PS Form 2976-A, *Customs Declaration and Dispatch Note CP 72,* inside a PS Form 2976-E, *Customs Declaration Envelope CP 91.*

Size Limits (221.52)

Maximum length: 36 inches
Maximum length and girth combined: 79 inches

Note:

Coins; banknotes; currency notes, including paper money; securities of any kind payable to bearer; traveler's checks; platinum, gold, and silver; precious stones; jewelry; watches; and other valuable articles are prohibited in Express Mail International shipments to Tonga.

Reciprocal Service Name: EMS

Country Code: TO

Areas Served: All

Priority Mail International (230) Price Group 6

Refer to Notice 123, *Price List*, for the applicable retail, commercial base, or commercial plus price.
Weight Limit: 44 lbs.

Note: *Ordinary Priority Mail International includes indemnity at no cost based on weight. (See 230.)*

Priority Mail International — Flat Rate

Flat Rate Envelopes or Small Flat Rate Priced Boxes: The maximum weight is 4 pounds. Refer to Notice 123, *Price List*, for the applicable retail, commercial base, or commercial plus price.

Flat Rate Boxes — Medium and Large: The maximum weight is 20 pounds, or the limit set by the individual country, whichever is less. Refer to Notice 123, *Price List*, for the retail, commercial base, or commercial plus price.

Insurance (232.92)

Available for **Priority Mail International merchandise parcels** only (see 323.72 for markings)

Insured Amount not over	Fee
$50	$2.45
100	3.60
200	4.75
300	5.90
400	7.05
500	8.20
515 max.	9.35

Size Limits (231.22)

Maximum length: 42 inches
Maximum length and girth combined: 79 inches

First-Class Mail International (240) Price Group 6

For the prices and maximum weights for letters, large envelopes (flats), packages (small packets), and postcards, see Notice 123, *Price List*.

Size Limits

Letters: See 241.212
Postcards: See 241.221
Large Envelopes (Flats): See 241.232
Packages (Small Packets): See 241.242 and 241.243

Airmail M-bags (260) — Direct Sack to One Addressee Price Group 6

Refer to Notice 123, *Price List*, for the applicable retail, commercial base, or commercial plus price.
Weight Limit: 66 lbs.

Matter for the Blind (270)

Free when sent as First-Class Mail International, including Priority Mail International Flat Rate Envelopes and Small Flat Rate Priced Boxes. Weight limit: 4 pounds.
Free when sent as Priority Mail International. Weight limit: 15 pounds.

Extra Services

Certificate of Mailing (313)

Individual Pieces	Fee
Individual article (PS Form 3817)	$1.15
Firm mailing books (PS Form 3877), per article listed (minimum 3)	0.44
Duplicate copy of PS Form 3817 or PS Form 3877 (per page)	1.15
Bulk Quantities	**Fee**
First 1,000 pieces (or fraction thereof)	$6.70
Each additional 1,000 pieces (or fraction thereof)	0.80
Duplicate copy of PS Form 3606	1.15

COD and Certified **NOT** for International Mail

International Business Reply Service (382)

Fee: Envelopes up to 2 ounces $1.50; Cards $1.00

International Postal Money Order (371)

NOT Available

International Reply Coupons (381) **Fee:** $2.20

Registered Mail (330) **Fee:** $11.75

Maximum Indemnity: $47.33
Available for First-Class Mail International, including postcards and Flat Rate Envelopes and Small Flat Rate Priced Boxes, and matter for the blind or other physically handicapped persons. Not applicable to M-bags.

Restricted Delivery (350) NOT Available

Return Receipt (340) **Fee:** $2.35

Available for registered mail and insured Priority Mail International parcels only.

Trinidad and Tobago

Country Conditions for Mailing

Prohibitions (130)

Charged metal caps and cartridges for portable firearms and non-explosive parts of artillery shells.
Coins exceeding L5 in value, except old coins intended as ornaments.
Firearms, switchblade knives, and sword-canes.
Honey.
Lottery tickets or articles relating to lotteries.
Perishable infectious biological substances.
Radioactive materials.

Restrictions

Arms not prohibited, require the permission of the Trinidad police authorities.
Saccharine requires the permission of the Trinidad health authorities.

Observations

None

Customs Forms Required (123)

First-Class Mail International items and Priority Mail International Flat Rate Envelopes and Small Flat Rate Priced Boxes:
PS Form 2976 (see 123.61)
Priority Mail International parcels:
PS Form 2976-A inside 2976-E (envelope)

Global Express Guaranteed (210) Price Group 7

Refer to Notice 123, *Price List*, for the applicable retail, commercial base, or commercial plus price.
Weight Limit: 70 lbs.

Insurance (212.5)

Insured Amount not over	Fee	Insured Amount not over	Fee
$100	No Fee	For document reconstruction insurance or non-document insurance coverage above $800, add $1.00 per $100 or fraction thereof, up to a maximum of $2,499 per shipment.	
200	$1.00		
300	2.00		
400	3.00		
500	4.00		
600	5.00		
700	6.00		
800	7.00	$2,499 max.	$24.00

Value Limit (212.1)

The maximum value of a GXG shipment to this country is $2,499 or a lesser amount if limited by content or value.

Size Limits (211.22)

The surface area of the address side of the item to be mailed must be large enough to completely contain the Global Express Guaranteed Air Waybill/Shipping Invoice (shipping label), postage, endorsement, and any applicable markings. The shipping label is approximately 5.5 inches high and 9.5 inches long.
Maximum length: 46 inches
Maximum width: 35 inches
Maximum height: 46 inches
Maximum length and girth combined: 108 inches

General Conditions for Mailing

See Publication 141, *Global Express Guaranteed Service Guide,* for information about areas served in the destination country, allowable contents, packaging and labeling requirements, tracking and tracing, service standards, and other conditions for mailing.

Express Mail International (220) Price Group 9

Refer to Notice 123, *Price List*, for the applicable retail, commercial base, or commercial plus price.
Weight Limit: 66 lbs.

Express Mail International — Flat Rate Envelope and Flat Rate Boxes

The maximum weight for the Express Mail International Flat Rate Envelope and the Express Mail International Flat Rate Boxes is 20 pounds. Refer to Notice 123, *Price List*, for the applicable retail, commercial base, or commercial plus price.

Insurance (222.8)

Available for **Express Mail International merchandise shipments** only

Insured Amount not over	Fee	Insured Amount not over	Fee
$100	No Fee	For insurance coverage above $2,000, add $1.50 for each $500 or fraction thereof, up to a maximum of $5,000 per shipment.	
200	$0.85		
500	2.35		
1,000	3.85		
1,500	5.35		
2,000	6.85	$5,000 max.	$15.85

Articles Admitted	Required Customs Form/Endorsement
Correspondence, business papers, computer data, and advertising materials.	PS Form 2976, *Customs — CN 22 and Sender's Declaration.* Endorse item clearly next to mailing label as BUSINESS PAPERS.
Merchandise samples without commercial value.	PS Form 2976-A, *Customs Declaration and Dispatch Note CP 72,* inside a PS Form 2976-E, *Customs Declaration Envelope CP 91.*
Merchandise and all articles subject to customs duty.	PS Form 2976-A, *Customs Declaration and Dispatch Note CP 72,* inside a PS Form 2976-E, *Customs Declaration Envelope CP 91.*

Size Limits (221.52)

Maximum length: 36 inches
Maximum length and girth combined: 79 inches

Note:
Coins; banknotes; currency notes, including paper money; securities of any kind payable to bearer; traveler's checks; platinum, gold, and silver; precious stones; jewelry; watches; and other valuable articles are prohibited in Express Mail International shipments to Trinidad and Tobago.

Reciprocal Service Name: Express Mail Service (EMS)

Country Code: TT

Areas Served: All

Priority Mail International (230) Price Group 9

Refer to Notice 123, *Price List*, for the applicable retail, commercial base, or commercial plus price.
Weight Limit: 44 lbs.

Note: *Ordinary Priority Mail International includes indemnity at no cost based on weight. (See 230.)*

Priority Mail International — Flat Rate
Flat Rate Envelopes or Small Flat Rate Priced Boxes: The maximum weight is 4 pounds. Refer to Notice 123, *Price List*, for the applicable retail, commercial base, or commercial plus price.

Flat Rate Boxes — Medium and Large: The maximum weight is 20 pounds, or the limit set by the individual country, whichever is less. Refer to Notice 123, *Price List*, for the retail, commercial base, or commercial plus price.

Insurance (232.92) NOT Available

Size Limits (231.22)
Maximum length: 42 inches
Maximum length and girth combined: 79 inches

First-Class Mail International (240) Price Group 9
For the prices and maximum weights for letters, large envelopes (flats), packages (small packets), and postcards, see Notice 123, *Price List*.

Size Limits
Letters: See 241.212
Postcards: See 241.221
Large Envelopes (Flats): See 241.232
Packages (Small Packets): See 241.242 and 241.243

Airmail M-bags (260) — Direct Sack to One Addressee Price Group 9

Refer to Notice 123, *Price List*, for the applicable retail, commercial base, or commercial plus price.
Weight Limit: 66 lbs.

Matter for the Blind (270)
Free when sent as First-Class Mail International, including Priority Mail International Flat Rate Envelopes and Small Flat Rate Priced Boxes. Weight limit: 4 pounds.
Free when sent as Priority Mail International. Weight limit: 15 pounds.

Extra Services

Certificate of Mailing (313)

Individual Pieces	Fee
Individual article (PS Form 3817)	$1.15
Firm mailing books (PS Form 3877), per article listed (minimum 3)	0.44
Duplicate copy of PS Form 3817 or PS Form 3877 (per page)	1.15
Bulk Quantities	**Fee**
First 1,000 pieces (or fraction thereof)	$6.70
Each additional 1,000 pieces (or fraction thereof)	0.80
Duplicate copy of PS Form 3606	1.15

COD and Certified **NOT** for International Mail

International Business Reply Service (382)
Fee: Envelopes up to 2 ounces $1.50; Cards $1.00

International Postal Money Order (371)
Use MO Form MP1
Maximum Amount Available: $700 **Fee:** $4.45
Money Order Inquiry: **Fee:** $5.50

International Reply Coupons (381) **Fee:** $2.20

Registered Mail (330) **Fee:** $11.75
Maximum Indemnity: $47.33
Available for First-Class Mail International, including postcards and Flat Rate Envelopes and Small Flat Rate Priced Boxes, and matter for the blind or other physically handicapped persons. Not applicable to M-bags.

Restricted Delivery (350) NOT Available

Return Receipt (340) **Fee:** $2.35
Available for registered mail only.

Tristan da Cunha

Country Conditions for Mailing

Prohibitions (130)
Perishable infectious biological substances.
Perishable noninfectious biological substances.

Restrictions
No list furnished.

Observations
None

Customs Forms Required (123)
First-Class Mail International items and Priority Mail International Flat Rate Envelopes and Small Flat Rate Priced Boxes:
PS Form 2976 (see 123.61)
Priority Mail International parcels:
PS Form 2976-A inside 2976-E (envelope)

Global Express Guaranteed (210)
Not Available

Express Mail International (220)
Not Available

Priority Mail International (230) Price Group 7

Refer to Notice 123, *Price List*, for the applicable retail, commercial base, or commercial plus price.
Weight Limit: 22 lbs.

Note: *Ordinary Priority Mail International includes indemnity at no cost based on weight. (See 230.)*

Priority Mail International — Flat Rate
Flat Rate Envelopes or Small Flat Rate Priced Boxes: The maximum weight is 4 pounds. Refer to Notice 123, *Price List*, for the applicable retail, commercial base, or commercial plus price.

Flat Rate Boxes — Medium and Large: The maximum weight is 20 pounds, or the limit set by the individual country, whichever is less. Refer to Notice 123, *Price List*, for the retail, commercial base, or commercial plus price.

Insurance (232.92) NOT Available

Size Limits (231.22)
Maximum length: 42 inches
Maximum length and girth combined: 79 inches

First-Class Mail International (240) Price Group 7
For the prices and maximum weights for letters, large envelopes (flats), packages (small packets), and postcards, see Notice 123, *Price List*.

Size Limits
Letters: See 241.212
Postcards: See 241.221
Large Envelopes (Flats): See 241.232
Packages (Small Packets): See 241.242 and 241.243

Airmail M-bags (260) — Direct Sack to One Addressee Price Group 7

Refer to Notice 123, *Price List*, for the applicable retail, commercial base, or commercial plus price.
Weight Limit: 66 lbs.

Matter for the Blind (270)
Free when sent as First-Class Mail International, including Priority Mail International Flat Rate Envelopes and Small Flat Rate Priced Boxes. Weight limit: 4 pounds.
Free when sent as Priority Mail International. Weight limit: 15 pounds.

Extra Services

Certificate of Mailing (313)

Individual Pieces	Fee
Individual article (PS Form 3817)	$1.15
Firm mailing books (PS Form 3877), per article listed (minimum 3)	0.44
Duplicate copy of PS Form 3817 or PS Form 3877 (per page)	1.15
Bulk Quantities	**Fee**
First 1,000 pieces (or fraction thereof)	$6.70
Each additional 1,000 pieces (or fraction thereof)	0.80
Duplicate copy of PS Form 3606	1.15

COD and Certified **NOT** for International Mail

International Business Reply Service (382)
Fee: Envelopes up to 2 ounces $1.50; Cards $1.00

International Postal Money Order (371)
NOT Available

International Reply Coupons (381) **Fee:** $2.20

Registered Mail (330) **Fee:** $11.75
Maximum Indemnity: $47.33
Available for First-Class Mail International, including postcards and Flat Rate Envelopes and Small Flat Rate Priced Boxes, and matter for the blind or other physically handicapped persons. Not applicable to M-bags.

Restricted Delivery (350) NOT Available

Return Receipt (340) **Fee:** $2.35
Available for registered mail only.

Tunisia

Country Conditions for Mailing

Prohibitions (130)

Arms of all kinds.
Aspirin, sulfa drugs, and vitamin compounds; chalk; pencils; soap; and detergents containing it; leather and articles of artificial leather; carpets, tapestries, and bed coverings; footwear of rubber or plastic; hosiery of cotton or synthetic fibers, except women's stockings; jewelry made of precious metal or plated with it; household articles of galvanized iron, galvanized steel or aluminum; and nonelectric cooking and heating appliances for household use.
Coins; currency notes (paper money); traveler's checks; securities payable to bearer; platinum, gold or silver, manufactured or not; precious stones; jewelry; and other valuable articles.
Copper coins and obsolete silver coins.
Lottery tickets and advertisements relating to lotteries.
Nursing bottles, nipples, and pacifiers that are not made of pure rubber and marked accordingly, and vulcanized by heat.
Perishable infectious biological substances.
Perishable noninfectious biological substances.
Playing cards.
Radioactive materials.
Saccharine and similar products, except in very small amounts imported as remedies by pharmacies or physicians.

Restrictions

Banknotes require a permit issued by the Tunisian exchange authorities unless imported by a bank.
Hunting and commercial arms may be imported with authorization of the Director of Public Safety.
Manufactured tobaccos, cigars, and cigarettes for personal use of the importer may be admitted up to 10 kilograms per year, subject to authorization of the Tunisian revenue authorities.

Observations

None

Customs Forms Required (123)

First-Class Mail International items and Priority Mail International Flat Rate Envelopes and Small Flat Rate Priced Boxes:
PS Form 2976 (see 123.61)
Priority Mail International parcels:
PS Form 2976-A inside 2976-E (envelope)

Global Express Guaranteed (210) Price Group 4

Refer to Notice 123, *Price List*, for the applicable retail, commercial base, or commercial plus price.
Weight Limit: 70 lbs.

Insurance (212.5)

Insured Amount not over	Fee	Insured Amount not over	Fee
$100	No Fee	For document reconstruction insurance or non-document insurance coverage above $800, add $1.00 per $100 or fraction thereof, up to a maximum of $2,499 per shipment.	
200	$1.00		
300	2.00		
400	3.00		
500	4.00		
600	5.00		
700	6.00		
800	7.00	$2,499 max.	$24.00

Value Limit (212.1)

The maximum value of a GXG shipment to this country is $2,499 or a lesser amount if limited by content or value.

Size Limits (211.22)

The surface area of the address side of the item to be mailed must be large enough to completely contain the Global Express Guaranteed Air Waybill/Shipping Invoice (shipping label), postage, endorsement, and any applicable markings. The shipping label is approximately 5.5 inches high and 9.5 inches long.
Maximum length: 46 inches
Maximum width: 35 inches
Maximum height: 46 inches
Maximum length and girth combined: 108 inches

General Conditions for Mailing

See Publication 141, *Global Express Guaranteed Service Guide,* for information about areas served in the destination country, allowable contents, packaging and labeling requirements, tracking and tracing, service standards, and other conditions for mailing.

Express Mail International (220) Price Group 8

Refer to Notice 123, *Price List*, for the applicable retail, commercial base, or commercial plus price.
Weight Limit: 66 lbs.

Express Mail International — Flat Rate Envelope and Flat Rate Boxes

The maximum weight for the Express Mail International Flat Rate Envelope and the Express Mail International Flat Rate Boxes is 20 pounds. Refer to Notice 123, *Price List*, for the applicable retail, commercial base, or commercial plus price.

Insurance (222.8)

Available for **Express Mail International merchandise shipments** only

Insured Amount not over	Fee	Insured Amount not over	Fee
$100	No Fee	For insurance coverage above $2,000, add $1.50 for each $500 or fraction thereof, up to a maximum of $5,000 per shipment.	
200	$0.85		
500	2.35		
1,000	3.85		
1,500	5.35		
2,000	6.85	$5,000 max.	$15.85

Articles Admitted	Required Customs Form/Endorsement
Business correspondence, commercial papers, and documents.	No form required. Endorse item clearly next to mailing label as BUSINESS PAPERS.
Merchandise samples without commercial value.	PS Form 2976, *Customs — CN 22 and Sender's Declaration.*
Merchandise and all articles subject to customs duty.	PS Form 2976-A, *Customs Declaration and Dispatch Note CP 72,* inside a PS Form 2976-E, *Customs Declaration Envelope CP 91.*

Size Limits (221.52)

Maximum length: 36 inches
Maximum length and girth combined: 79 inches

Note:

Coins; banknotes; currency notes, including paper money; securities of any kind payable to bearer; traveler's checks; platinum, gold, and silver; precious stones; jewelry; watches; and other valuable articles are prohibited in Express Mail International shipments to Tunisia.

Reciprocal Service Name: Rapid Post

Country Code: TN

Areas Served:

City	Foreign Postal Code	City	Foreign Postal Code
Ariana	2080	Manouba (la)	2010
Bardo (le)	2000	Marsa (la)	2070
Beja		Medenine	
Ben Arous	2013	Megrine	2033
Ben Arous Sud	2043	Mergrine Chaker	2024
Bizerte		Megrine Riadh	2014
Carthage	2016	Menzah (El)	1004
Cebalat B. Ammar	2032	Monastir	
Cebalat du Mornag	2090	Nabeul	
Cite el Khadra	1003	Oued Ellil	2021
Cite Ettadhamen	2041	Ouerdia (El)	1009
Cite Ettahrir	2042	Omrand (El)	1005
Cite Ezzouhour	2052	Rades 2040	
Den Den	2011	Salambo	2025
Erricala	2044	Sfax	
Essaida	2031	Sidi Bou Said	2026
Ezzahra	2034	Sidi Daoud	2046
Ezzahrouni	2051	Sidi Fathallah	2023
Gabes		Siliana	
Gafsa		Soukra (la)	2036
Goulette (la)	2060	Sousse	
Habibia (El)	2012	Tataouine	
Hammamet		Tozeur	
Hammam Lif	2050	Tunis RP	1000
Jendouba		Tunis Bab Menara	1008
Jerba		Tunis Bab Souika	1006
Kabaria	2053	Tunis Belvedere	1002
Kairouan		Tunis Carthage	2035
Kalaat el Andleus	2022	Tunis el Hafsia	1059
Kasserine		Tunis Hached	1049
Kebili		Tunis Halles	1079
Kef		Tunis Jabbari	1007
Kram (le)	2015	Tunis Reque	1001
Kram Ouest	2089	Tunis Tri Tri	1060
Mahdia		Zaghouan	

Priority Mail International (230) Price Group 8

Refer to Notice 123, *Price List*, for the applicable retail, commercial base, or commercial plus price.
Weight Limit: 66 lbs.

Note: *Ordinary Priority Mail International includes indemnity at no cost based on weight. (See 230.)*

Priority Mail International — Flat Rate

Flat Rate Envelopes or Small Flat Rate Priced Boxes: The maximum weight is 4 pounds. Refer to Notice 123, *Price List*, for the applicable retail, commercial base, or commercial plus price.

Flat Rate Boxes — Medium and Large: The maximum weight is 20 pounds, or the limit set by the individual country, whichever is less. Refer to Notice 123, *Price List*, for the retail, commercial base, or commercial plus price.

Insurance (232.92)

Available for **Priority Mail International merchandise parcels** only (see 323.72 for markings)

Insured Amount not over	Fee	Insured Amount not over	Fee
$50	$2.45	Add $1.15 for each additional $100 or fraction of insurance coverage.	
100	3.60		
200	4.75		
300	5.90		
400	7.05		
500	8.20	$3,834 max.	$47.30

Size Limits (231.22)

Maximum length: 42 inches
Maximum length and girth combined: 79 inches

First-Class Mail International (240) Price Group 8

For the prices and maximum weights for letters, large envelopes (flats), packages (small packets), and postcards, see Notice 123, *Price List*.

Size Limits

Letters: See 241.212
Postcards: See 241.221
Large Envelopes (Flats): See 241.232
Packages (Small Packets): See 241.242 and 241.243

Airmail M-bags (260) — Direct Sack to One Addressee Price Group 8

Refer to Notice 123, *Price List*, for the applicable retail, commercial base, or commercial plus price.
Weight Limit: 66 lbs.

Matter for the Blind (270) NOT Available

Extra Services

Certificate of Mailing (313)

Individual Pieces	Fee
Individual article (PS Form 3817)	$1.15
Firm mailing books (PS Form 3877), per article listed (minimum 3)	0.44
Duplicate copy of PS Form 3817 or PS Form 3877 (per page)	1.15
Bulk Quantities	**Fee**
First 1,000 pieces (or fraction thereof)	$6.70
Each additional 1,000 pieces (or fraction thereof)	0.80
Duplicate copy of PS Form 3606	1.15

COD and Certified

NOT for International Mail

International Business Reply Service (382)

Fee: Envelopes up to 2 ounces $1.50; Cards $1.00

International Postal Money Order (371)

NOT Available

International Reply Coupons (381)

Fee: $2.20

Registered Mail (330)

Fee: $11.75

Maximum Indemnity: $47.33
Available for First-Class Mail International, including postcards and Flat Rate Envelopes and Small Flat Rate Priced Boxes, and matter for the blind or other physically handicapped persons. Not applicable to M-bags.

Restricted Delivery (350)

NOT Available

Return Receipt (340)

Fee: $2.35

Available for registered mail and insured Priority Mail International parcels only.

Turkey

Country Conditions for Mailing

Prohibitions (130)

Arms and munitions of war and their accessories.
Coins; banknotes; traveler's checks; securities payable to bearer; platinum, gold or silver, manufactured or not; precious stones; jewelry; and other valuable articles except in insured Priority Mail International service. Currency notes (paper money) are permitted in insured Priority Mail International or with Registered Mail service.
Cosmetic products.
Fish items, canned animal products, cured spiced beef and sausage, edible fresh and dried fruits and vegetables, and other animal and vegetable products.
Lottery tickets and advertisements relating to lotteries.
Narcotic substances of all kinds and products containing bonsai (JWH-018) as defined in the "World Drug Report 2011" from the United Nations Office on Drugs and Crime.
Perishable infectious biological substances.
Perishable noninfectious biological substances.
Silver coins and all foreign coins (except gold coins and ancient coins for collections).

Restrictions

Clinical thermometers must be accompanied by an official certificate of inspection.
Food supplements and foods for athletes may be sent to Turkey only when a medical report, prescription, or national sportsperson's certificate is enclosed with the item by the addressee.
Stocks, bonds, and coupons, unless addressed to the Central Bank of the Turkish Republic, require the authorization from the Turkish exchange control authorities.
The following may be imported only by the Monopoly Administration:
The permission of the Turkish authorities is required for the importation of pharmaceutical specialties, except small quantities for medical or veterinary use or samples by physicians.
The value of gift shipments must not exceed 500 DM.
Tobacco and its products; cigarette paper and apparatus for making cigarettes; tobacco seed; tea; and playing cards other than children's games.
Turkish money, as well as checks and drafts expressed in Turkish money, require authorization from the ministry of Finance. If imported without advance permission, such remittances are liable to confiscation.
Used bedding, linens, clothing, carpets, empty sacks, etc., must be accompanied by a certificate of disinfection.

Observations

1. The value and net weight of each kind of article or goods must be shown on the customs declarations, also the country of origin of the merchandise.
2. Each commercial shipment for Turkey must have enclosed a combined certificate of origin and consular invoice, which must be certified by a chamber of commerce or other trade organization or by a notary public, and be legalized by a Turkish consul.
3. Each commercial shipment of printed matter, such as books, newspapers, or magazines, must likewise be accompanied by an invoice and, except in the case of daily newspapers, by a certificate of origin also.
4. Import license must be obtained for many types of merchandise, and others are subject to import quotas.

Customs Forms Required (123)

First-Class Mail International items and Priority Mail International Flat Rate Envelopes and Small Flat Rate Priced Boxes:
PS Form 2976 (see 123.61)
Priority Mail International parcels:
PS Form 2976-A inside 2976-E (envelope)

Global Express Guaranteed (210) Price Group 6

Refer to Notice 123, *Price List*, for the applicable retail, commercial base, or commercial plus price.
Weight Limit: 70 lbs.

Insurance (212.5)

Insured Amount not over	Fee	Insured Amount not over	Fee
$100	No Fee	For document reconstruction insurance or non-document insurance coverage above $800, add $1.00 per $100 or fraction thereof, up to a maximum of $2,499 per shipment.	
200	$1.00		
300	2.00		
400	3.00		
500	4.00		
600	5.00		
700	6.00		
800	7.00	$2,499 max.	$24.00

Value Limit (212.1)

The maximum value of a GXG shipment to this country is $2,499 or a lesser amount if limited by content or value.

Size Limits (211.22)

The surface area of the address side of the item to be mailed must be large enough to completely contain the Global Express Guaranteed Air Waybill/Shipping Invoice (shipping label), postage, endorsement, and any applicable markings. The shipping label is approximately 5.5 inches high and 9.5 inches long.
Maximum length: 46 inches
Maximum width: 35 inches
Maximum height: 46 inches
Maximum length and girth combined: 108 inches

General Conditions for Mailing

See Publication 141, *Global Express Guaranteed Service Guide,* for information about areas served in the destination country, allowable contents, packaging and labeling requirements, tracking and tracing, service standards, and other conditions for mailing.

Express Mail International (220) Price Group 4

Refer to Notice 123, *Price List*, for the applicable retail, commercial base, or commercial plus price.
Weight Limit: 66 lbs.

Express Mail International — Flat Rate Envelope and Flat Rate Boxes

The maximum weight for the Express Mail International Flat Rate Envelope and the Express Mail International Flat Rate Boxes is 20 pounds. Refer to Notice 123, *Price List*, for the applicable retail, commercial base, or commercial plus price.

Insurance (222.8)

Available for **Express Mail International merchandise shipments** only

Insured Amount not over	Fee	Insured Amount not over	Fee
$100	No Fee	For insurance coverage above $2,000, add $1.50 for each $500 or fraction thereof, up to a maximum of $5,000 per shipment.	
200	$0.85		
500	2.35		
1,000	3.85		
1,500	5.35		
2,000	6.85	$5,000 max.	$15.85

Articles Admitted	Required Customs Form/Endorsement
Business papers and documents.	No form required. Endorse item clearly next to mailing label as BUSINESS PAPERS.
Merchandise samples without commercial value, computer data, and other non-duitable articles.	PS Form 2976, *Customs — CN 22 and Sender's Declaration.*
Merchandise, advertising materials, or any articles subject to customs duty.	PS Form 2976-A, *Customs Declaration and Dispatch Note CP 72,* inside a PS Form 2976-E, *Customs Declaration Envelope CP 91.*

Size Limits (221.52)

Maximum length: 36 inches
Maximum length and girth combined: 79 inches

Notes:

1. A commercial invoice should be included with all commercial shipments.
2. Coins; banknotes; currency notes, including paper money; securities of any kind payable to bearer; traveler's checks; platinum, gold, and silver; precious stones; jewelry; watches; and other valuable articles are prohibited in Express Mail International shipments to Turkey.

Reciprocal Service Name: Acele Posta Servisi or APS

Country Code: TR

Areas Served: All

Priority Mail International (230) Price Group 4

Refer to Notice 123, *Price List*, for the applicable retail, commercial base, or commercial plus price.
Weight Limit: 66 lbs.

Note: *Ordinary Priority Mail International includes indemnity at no cost based on weight. (See 230.)*

Priority Mail International — Flat Rate

Flat Rate Envelopes or Small Flat Rate Priced Boxes: The maximum weight is 4 pounds. Refer to Notice 123, *Price List*, for the applicable retail, commercial base, or commercial plus price.

Flat Rate Boxes — Medium and Large: The maximum weight is 20 pounds, or the limit set by the individual country, whichever is less. Refer to Notice 123, *Price List*, for the retail, commercial base, or commercial plus price.

Insurance (232.92)

Available for **Priority Mail International merchandise parcels** only (see 323.72 for markings)

Insured Amount not over	Fee	Insured Amount not over	Fee
$50	$2.45		
100	3.60	Add $1.15 for each additional $100 or fraction of insurance coverage.	
200	4.75		
300	5.90		
400	7.05		
500	8.20	$952 max.	$13.95

Size Limits (231.22)

Maximum length: 42 inches
Maximum length and girth combined: 79 inches

First-Class Mail International (240) Price Group 4

For the prices and maximum weights for letters, large envelopes (flats), packages (small packets), and postcards, see Notice 123, *Price List*.

Size Limits

Letters: See 241.212
Postcards: See 241.221
Large Envelopes (Flats): See 241.232
Packages (Small Packets): See 241.242 and 241.243

Airmail M-bags (260) — Direct Sack to One Addressee Price Group 4

Refer to Notice 123, *Price List*, for the applicable retail, commercial base, or commercial plus price.
Weight Limit: 66 lbs.

Matter for the Blind (270)

Free when sent as First-Class Mail International, including Priority Mail International Flat Rate Envelopes and Small Flat Rate Priced Boxes. Weight limit: 4 pounds.
Free when sent as Priority Mail International. Weight limit: 15 pounds.

Extra Services

Certificate of Mailing (313)

Individual Pieces	Fee
Individual article (PS Form 3817)	$1.15
Firm mailing books (PS Form 3877), per article listed (minimum 3)	0.44
Duplicate copy of PS Form 3817 or PS Form 3877 (per page)	1.15
Bulk Quantities	**Fee**
First 1,000 pieces (or fraction thereof)	$6.70
Each additional 1,000 pieces (or fraction thereof)	0.80
Duplicate copy of PS Form 3606	1.15

COD and Certified

NOT for International Mail

International Business Reply Service (382)

Fee: Envelopes up to 2 ounces $1.50; Cards $1.00

International Postal Money Order (371)

NOT Available

International Reply Coupons (381)

Fee: $2.20

Registered Mail (330)

Fee: $11.75

Maximum Indemnity: $47.33
Available for First-Class Mail International, including postcards and Flat Rate Envelopes and Small Flat Rate Priced Boxes, and matter for the blind or other physically handicapped persons. Not applicable to M-bags.

Restricted Delivery (350)

Fee: $4.55

Available for registered mail with a return receipt.
Endorsements: A remettre en main propre.
Alicinin kendisine verilecek.

Return Receipt (340)

Fee: $2.35

Available for registered mail and insured Priority Mail International parcels only.

Turkmenistan

Country Conditions for Mailing

Prohibitions (130)

ll foodstuffs if the time left until the "use-by" date is less than 70% (calculated from the date of manufacture).
Coins; bank notes; currency notes (paper money); securities of any kind payable to bearer; traveler's checks; platinum, gold, and silver (manufactured or not); precious stones; jewelry; and other valuable articles are prohibited in all classes of mail, including Express Mail International shipments, that are mailed to Turkmenistan.
Foodstuffs that are manufactured using genetically modified organisms (GMOs).
Perishable infectious biological substances.
Perishable noninfectious biological substances.
Products or alcoholic beverages that contain more than 18% ethyl alcohol (finished products, polystyrene, "Tetrapak" packaging).
Radioactive materials.
Firearms and ammunition, explosives, combat weapons.
Printed materials, plates, negatives, developed films, photographs, movies, video recordings, magnetic computer information storage media, manuscripts, records and other sound recordings, drawings and other printed materials, and forms of plastic art politically or economically damaging to Turkmenistan.
Pornographic, vulgar, and erotic materials.
Soviet and foreign currency, government securities and Soviet lottery tickets, Soviet Vnieshposyltorg and Vniesheconombanque checks.
Eurocheck system forms and access cards.
Undeveloped movies and photographic films, photographic plates and paper.
Eggs, honey, pollen, wax, honeycomb.
High-frequency radio-electronic devices (transmitters and receivers) regardless of strength, high frequency ultrasound equipment, and generators for industrial, scientific, and medical use, and location detection devices used to measure transportation speed.
Copying/reproduction equipment (with the exception of typewriters).

Restrictions

Hunting weapons require prior authority of the Ministry of the Interior.
Seeds, plants, root tubers, bulbs and other plant parts, fruits, legumes, and fresh vegetables are admitted as authorized by the State Quarantine Inspectorate Agroindustrial Committee. Seeds and plants must be accompanied by plant health certificates and import/export permits.
Medicines and vitamins are admitted as authorized by the Bureau for Registration of Medicines and Pharmaceuticals.
Canceled or uncanceled postage stamps are admitted within the framework of organized philatelic exchanges.
The following articles may be mailed provided the specific quantity is observed and the articles are for the personal use of the addressee:

Description of Articles	Unit of Measurement	Maximum Quantity Allowed
1. Clothing (coats, overcoats, jackets)	piece/pair	3 of each
2. Fabric	meter	10
3. Standard electronic radio and video equipment, spare parts, and accessories	piece	1 of each
4. Cameras, VCRs and movie cameras, lenses, spare parts and accessories	piece	1 of each
5. Electronic music equipment and electronic musical instruments (keyboards, synthesizers, etc.), accessories and spare parts	piece	1 of each
6. All types of sound recording devices (cassettes, reels, laser disks)	piece	10
7. All types of video recording devices (cassettes, reels, disks, etc.)	piece	
8. Personal computers and peripheral equipment	set	1
9. Personal computer information storage media. Information storage media with prerecorded information are admissible only with information from the sender on the type of microcomputer and operating system used to record the information in question	piece	total of 15
10. Phonograph records	piece/set	15/2

Except for articles whose import is expressly prohibited, items not subject to the above limits will be admitted, without restrictions, provided that they are for the personal use of the addressee.

Observations

1. First-Class Mail International items must not contain any articles other than written personal messages, documents, receipts, invoices, statements, and personal photographs.
2. Postal items containing admitted articles in the quantities specified are delivered to the addressee upon payment of customs duty. No duty is collected when the aggregate value of the contents does not exceed the equivalent of a retail price of 30 Russian roubles (approximately $18US).
3. If prohibited articles are sent in postal items, one of the following three procedures is followed:
   a. Confiscation of the entire item.
   b. Confiscation of the prohibited articles, the rest of the contents delivered to the addressee.
   c. Return of the item to the country of origin.
4. Return Receipts (Advice of Delivery) are initialed or signed by a postal official to indicate delivery. The addressee will not sign the receipt.
5. All customs declaration forms must list the contents in English and include an interline translation in French, Russian, or a language used in the country. If additional space is necessary to list the contents, a second customs form should be used and the original form annotated to that effect.

6. Books, newspapers, magazines, and other printed materials are admitted without restriction with the exception of printed materials that are referred to above under Prohibitions.
7. Commercial shipments must be accompanied by the necessary invoices and permits.

Customs Forms Required (123)

First-Class Mail International items and Priority Mail International Flat Rate Envelopes and Small Flat Rate Priced Boxes:
PS Form 2976 (see 123.61)
Priority Mail International parcels:
PS Form 2976-A inside 2976-E (envelope)

Global Express Guaranteed (210)

Not Available

Express Mail International (220) Price Group 6

Refer to Notice 123, *Price List*, for the applicable retail, commercial base, or commercial plus price.
Weight Limit: 66 lbs.

Express Mail International — Flat Rate Envelope and Flat Rate Boxes

The maximum weight for the Express Mail International Flat Rate Envelope and the Express Mail International Flat Rate Boxes is 20 pounds. Refer to Notice 123, *Price List*, for the applicable retail, commercial base, or commercial plus price.

Insurance (222.8)

Available for **Express Mail International merchandise shipments** only

Insured Amount not over	Fee	Insured Amount not over	Fee
$100	No Fee	For insurance coverage above $2,000, add $1.50 for each $500 or fraction thereof, up to a maximum of $5,000 per shipment.	
200	$0.85		
500	2.35		
1,000	3.85		
1,500	5.35		
2,000	6.85	$5,000 max.	$15.85

Articles Admitted	Required Customs Form/Endorsement
Correspondence, business papers, and documents.	PS Form 2976, *Customs — CN 22 and Sender's Declaration.* Endorse item clearly next to mailing label as BUSINESS PAPERS.
Merchandise samples without commercial value and not subject to customs duty.	PS Form 2976-A, *Customs Declaration and Dispatch Note CP 72,* inside a PS Form 2976-E, *Customs Declaration Envelope CP 91.*
Merchandise and all articles subject to customs duty.	PS Form 2976-A, *Customs Declaration and Dispatch Note CP 72,* inside a PS Form 2976-E, *Customs Declaration Envelope CP 91.*

Size Limits (221.52)

Maximum length: 36 inches
Maximum length and girth combined: 79 inches

Notes:

1. Addressees are required to obtain import licenses/permits to receive most goods.
2. Coins; banknotes; currency notes, including paper money; securities of any kind payable to bearer; traveler's checks; platinum, gold, and silver; precious stones; jewelry; watches; and other valuable articles are prohibited in Express Mail International shipments to Turkmenistan.

Reciprocal Service Name: EMS

Country Code: TM

Areas Served:

Express Mail International is available ***only*** to the following location:
744000 Ashkhabad

Priority Mail International (230) Price Group 6

Refer to Notice 123, *Price List*, for the applicable retail, commercial base, or commercial plus price.
Weight Limit: 44 lbs.

Note: *Ordinary Priority Mail International includes indemnity at no cost based on weight. (See 230.)*

Priority Mail International — Flat Rate

Flat Rate Envelopes or Small Flat Rate Priced Boxes: The maximum weight is 4 pounds. Refer to Notice 123, *Price List*, for the applicable retail, commercial base, or commercial plus price.

Flat Rate Boxes — Medium and Large: The maximum weight is 20 pounds, or the limit set by the individual country, whichever is less. Refer to Notice 123, *Price List*, for the retail, commercial base, or commercial plus price.

Insurance (232.92)

Available for **Priority Mail International merchandise parcels** only (see 323.72 for markings)

Insured Amount not over	Fee	Insured Amount not over	Fee
$50	$2.45	Add $1.15 for each additional $100 or fraction of insurance coverage.	
100	3.60		
200	4.75		
300	5.90		
400	7.05		
500	8.20	$729 max.	$11.65

Size Limits (231.22)

Maximum length: 42 inches
Maximum length and girth combined: 79 inches

First-Class Mail International (240) Price Group 6

For the prices and maximum weights for letters, large envelopes (flats), packages (small packets), and postcards, see Notice 123, *Price List*.

Size Limits

Letters: See 241.212
Postcards: See 241.221
Large Envelopes (Flats): See 241.232
Packages (Small Packets): See 241.242 and 241.243

Airmail M-bags (260) — Direct Sack to One Addressee Price Group 6

Refer to Notice 123, *Price List*, for the applicable retail, commercial base, or commercial plus price.
Weight Limit: 66 lbs.

Matter for the Blind (270)

Free when sent as First-Class Mail International, including Priority Mail International Flat Rate Envelopes and Small Flat Rate Priced Boxes. Weight limit: 4 pounds.
Free when sent as Priority Mail International. Weight limit: 15 pounds.

Extra Services

Certificate of Mailing (313)

Individual Pieces	Fee
Individual article (PS Form 3817)	$1.15
Firm mailing books (PS Form 3877), per article listed (minimum 3)	0.44
Duplicate copy of PS Form 3817 or PS Form 3877 (per page)	1.15
Bulk Quantities	**Fee**
First 1,000 pieces (or fraction thereof)	$6.70
Each additional 1,000 pieces (or fraction thereof)	0.80
Duplicate copy of PS Form 3606	1.15

COD and Certified

NOT for International Mail

International Business Reply Service (382)

Fee: Envelopes up to 2 ounces $1.50; Cards $1.00

International Postal Money Order (371)

NOT Available

International Reply Coupons (381)

Fee: $2.20

Registered Mail (330)

Fee: $11.75

Maximum Indemnity: $47.33
Available for First-Class Mail International, including postcards and Flat Rate Envelopes and Small Flat Rate Priced Boxes, and matter for the blind or other physically handicapped persons. Not applicable to M-bags.

Restricted Delivery (350)

Fee: $4.55

Available for registered mail with a return receipt.
Endorsements: A remettre en main propre.

Return Receipt (340)

Fee: $2.35

Available for registered mail and insured Priority Mail International parcels only.

Turks and Caicos Islands

Country Conditions for Mailing

Prohibitions (130)
Coins; banknotes; currency notes (paper money); traveler's checks; securities payable to bearer; platinum, gold or silver, manufactured or not; precious stones; jewelry; and other valuable articles.
Perishable infectious biological substances.
Perishable noninfectious biological substances.

Restrictions
The importation of firearms requires a permit.

Observations
None

Customs Forms Required (123)
First-Class Mail International items and Priority Mail International Flat Rate Envelopes and Small Flat Rate Priced Boxes:
PS Form 2976 (see 123.61)
Priority Mail International parcels:
PS Form 2976-A inside 2976-E (envelope)

Global Express Guaranteed (210) Price Group 7

Refer to Notice 123, *Price List*, for the applicable retail, commercial base, or commercial plus price.
Weight Limit: 70 lbs.

Insurance (212.5)

Insured Amount not over	Fee	Insured Amount not over	Fee
$100	No Fee	For document reconstruction insurance or non-document insurance coverage above $800, add $1.00 per $100 or fraction thereof, up to a maximum of $2,499 per shipment.	
200	$1.00		
300	2.00		
400	3.00		
500	4.00		
600	5.00		
700	6.00		
800	7.00	$2,499 max.	$24.00

Value Limit (212.1)
The maximum value of a GXG shipment to this country is $2,499 or a lesser amount if limited by content or value.

Size Limits (211.22)
The surface area of the address side of the item to be mailed must be large enough to completely contain the Global Express Guaranteed Air Waybill/Shipping Invoice (shipping label), postage, endorsement, and any applicable markings. The shipping label is approximately 5.5 inches high and 9.5 inches long.
Maximum length: 46 inches
Maximum width: 35 inches
Maximum height: 46 inches
Maximum length and girth combined: 108 inches

General Conditions for Mailing
See Publication 141, *Global Express Guaranteed Service Guide,* for information about areas served in the destination country, allowable contents, packaging and labeling requirements, tracking and tracing, service standards, and other conditions for mailing.

Express Mail International (220) Price Group 9

Refer to Notice 123, *Price List*, for the applicable retail, commercial base, or commercial plus price.
Weight Limit: 66 lbs.

Express Mail International — Flat Rate Envelope and Flat Rate Boxes
The maximum weight for the Express Mail International Flat Rate Envelope and the Express Mail International Flat Rate Boxes is 20 pounds. Refer to Notice 123, *Price List*, for the applicable retail, commercial base, or commercial plus price.

Insurance (222.8)
Available for **Express Mail International merchandise shipments** only

Insured Amount not over	Fee
$100	No Fee
200	$0.85
500	2.35
650 max.	3.85

Articles Admitted	Required Customs Form/Endorsement
Business correspondence, commercial papers, and documents.	No form required. Endorse item clearly next to mailing label as BUSINESS PAPERS.
Merchandise samples without commercial value.	PS Form 2976, *Customs — CN 22 and Sender's Declaration*.
Merchandise and all articles subject to customs duty.	PS Form 2976-A, *Customs Declaration and Dispatch Note CP 72*, inside a PS Form 2976-E, *Customs Declaration Envelope*.

Size Limits (221.52)
Maximum length: 42 inches
Maximum length and girth combined: 79 inches

Note:
None provided.

Reciprocal Service Name: None provided.

Country Code: TC

Areas Served: All except Bambarra, Belfour, Bottle Creek, Cockburn Harbour, Conch Bar, Kew, Lorimmers, Sandy Point, and Whitby. Alternative service delivery is provided to these locations.

Priority Mail International (230) Price Group 9

Refer to Notice 123, *Price List*, for the applicable retail, commercial base, or commercial plus price.
Weight Limit: 44 lbs.

Note: *Ordinary Priority Mail International includes indemnity at no cost based on weight. (See 230.)*

Priority Mail International — Flat Rate

Flat Rate Envelopes or Small Flat Rate Priced Boxes: The maximum weight is 4 pounds. Refer to Notice 123, *Price List*, for the applicable retail, commercial base, or commercial plus price.

Flat Rate Boxes — Medium and Large: The maximum weight is 20 pounds, or the limit set by the individual country, whichever is less. Refer to Notice 123, *Price List*, for the retail, commercial base, or commercial plus price.

Insurance (232.92) NOT Available

Size Limits (231.22)

Maximum length: 42 inches
Maximum length and girth combined: 79 inches

First-Class Mail International (240) Price Group 9

For the prices and maximum weights for letters, large envelopes (flats), packages (small packets), and postcards, see Notice 123, *Price List*.

Size Limits

Letters: See 241.212
Postcards: See 241.221
Large Envelopes (Flats): See 241.232
Packages (Small Packets): See 241.242 and 241.243

Airmail M-bags (260) — Direct Sack to One Addressee Price Group 9

Refer to Notice 123, *Price List*, for the applicable retail, commercial base, or commercial plus price.
Weight Limit: 66 lbs.

Matter for the Blind (270)

Free when sent as First-Class Mail International, including Priority Mail International Flat Rate Envelopes and Small Flat Rate Priced Boxes. Weight limit: 4 pounds.
Free when sent as Priority Mail International. Weight limit: 15 pounds.

Extra Services

Certificate of Mailing (313)

Individual Pieces	**Fee**
Individual article (PS Form 3817)	$1.15
Firm mailing books (PS Form 3877), per article listed (minimum 3)	0.44
Duplicate copy of PS Form 3817 or PS Form 3877 (per page)	1.15
Bulk Quantities	**Fee**
First 1,000 pieces (or fraction thereof)	$6.70
Each additional 1,000 pieces (or fraction thereof)	0.80
Duplicate copy of PS Form 3606	1.15

COD and Certified **NOT** for International Mail

International Business Reply Service (382)

Fee: Envelopes up to 2 ounces $1.50; Cards $1.00

International Postal Money Order (371)

NOT Available

International Reply Coupons (381) **Fee:** $2.20

Registered Mail (330) **Fee:** $11.75

Maximum Indemnity: $47.33
Available for First-Class Mail International, including postcards and Flat Rate Envelopes and Small Flat Rate Priced Boxes, and matter for the blind or other physically handicapped persons. Not applicable to M-bags.

Restricted Delivery (350) **Fee:** $4.55

Available for registered mail with a return receipt.
Endorsements: Deliver to addressee in person.

Return Receipt (340) **Fee:** $2.35

Available for registered mail only.

Tuvalu

Country Conditions for Mailing

Prohibitions (130)
Radioactive materials.

Restrictions
No list furnished.

Observations
None

Customs Forms Required (123)
First-Class Mail International items and Priority Mail International Flat Rate Envelopes and Small Flat Rate Priced Boxes:
PS Form 2976 (see 123.61)
Priority Mail International parcels:
PS Form 2976-A inside 2976-E (envelope)

Global Express Guaranteed (210)
Not Available

Express Mail International (220)
Not Available

Priority Mail International (230) Price Group 6

Refer to Notice 123, *Price List*, for the applicable retail, commercial base, or commercial plus price.
Weight Limit: 55 lbs.

Note: *Ordinary Priority Mail International includes indemnity at no cost based on weight. (See 230.)*

Priority Mail International — Flat Rate
Flat Rate Envelopes or Small Flat Rate Priced Boxes: The maximum weight is 4 pounds. Refer to Notice 123, *Price List*, for the applicable retail, commercial base, or commercial plus price.

Flat Rate Boxes — Medium and Large: The maximum weight is 20 pounds, or the limit set by the individual country, whichever is less. Refer to Notice 123, *Price List*, for the retail, commercial base, or commercial plus price.

Insurance (232.92)
Available for **Priority Mail International merchandise parcels** only (see 323.72 for markings)

Insured Amount not over	Fee
$50	$2.45
100	3.60
200	4.75
300	5.90
400	7.05
500	8.20
600	9.35
675 max.	10.50

Size Limits (231.22)
Maximum length: 42 inches
Maximum length and girth combined: 79 inches

First-Class Mail International (240) Price Group 6
For the prices and maximum weights for letters, large envelopes (flats), packages (small packets), and postcards, see Notice 123, *Price List*.

Size Limits
Letters: See 241.212
Postcards: See 241.221
Large Envelopes (Flats): See 241.232
Packages (Small Packets): See 241.242 and 241.243

Airmail M-bags (260) — Direct Sack to One Addressee Price Group 6

Refer to Notice 123, *Price List*, for the applicable retail, commercial base, or commercial plus price.
Weight Limit: 66 lbs.

Matter for the Blind (270)
Free when sent as First-Class Mail International, including Priority Mail International Flat Rate Envelopes and Small Flat Rate Priced Boxes. Weight limit: 4 pounds.
Free when sent as Priority Mail International. Weight limit: 15 pounds.

Extra Services

Certificate of Mailing (313)

Individual Pieces	Fee
Individual article (PS Form 3817)	$1.15
Firm mailing books (PS Form 3877), per article listed (minimum 3)	0.44
Duplicate copy of PS Form 3817 or PS Form 3877 (per page)	1.15
Bulk Quantities	**Fee**
First 1,000 pieces (or fraction thereof)	$6.70
Each additional 1,000 pieces (or fraction thereof)	0.80
Duplicate copy of PS Form 3606	1.15

COD and Certified **NOT** for International Mail

International Business Reply Service (382)
Fee: Envelopes up to 2 ounces $1.50; Cards $1.00

International Postal Money Order (371)
NOT Available

International Reply Coupons (381) **Fee:** $2.20

Registered Mail (330) **Fee:** $11.75
Maximum Indemnity: $47.33
Available for First-Class Mail International, including postcards and Flat Rate Envelopes and Small Flat Rate Priced Boxes, and matter for the blind or other physically handicapped persons. Not applicable to M-bags.

Restricted Delivery (350) **Fee:** $4.55
Available for registered mail with a return receipt.
Endorsements: A remettre en main propre.

Return Receipt (340) **Fee:** $2.35
Available for registered mail and insured Priority Mail International parcels only.

Uganda

Country Conditions for Mailing

Prohibitions (130)
Firearms and ammunition except under permit.
Japanese shaving brushes.
Lottery tickets and advertisements concerning lotteries.
Radioactive materials.
Switchblade knives.

Restrictions
Coins; banknotes; currency notes (paper money); securities payable to bearer; traveler checks; platinum, gold or silver, manufactured or not; precious stones, jewelry; and other valuable articles, may only be sent in registered First-Class Mail International shipments.
Used clothing, bedding, and similar articles for sale must be accompanied by a certificate of disinfection.

Observations
1. Many types of merchandise require authorization to import, which the addressee must obtain from the Ministry of Commerce and Industry at Kampala.
2. Mailers should be assured that the addressees have such permits or can obtain them if needed.

Customs Forms Required (123)
First-Class Mail International items and Priority Mail International Flat Rate Envelopes and Small Flat Rate Priced Boxes:
PS Form 2976 (see 123.61)
Priority Mail International parcels:
PS Form 2976-A inside 2976-E (envelope)

Global Express Guaranteed (210) Price Group 4

Refer to Notice 123, *Price List*, for the applicable retail, commercial base, or commercial plus price.
Weight Limit: 70 lbs.

Insurance (212.5)

Insured Amount not over	Fee	Insured Amount not over	Fee
$100	No Fee	For document reconstruction insurance or non-document insurance coverage above $800, add $1.00 per $100 or fraction thereof, up to a maximum of $2,499 per shipment.	
200	$1.00		
300	2.00		
400	3.00		
500	4.00		
600	5.00		
700	6.00		
800	7.00	$2,499 max.	$24.00

Value Limit (212.1)
The maximum value of a GXG shipment to this country is $2,499 or a lesser amount if limited by content or value.

Size Limits (211.22)
The surface area of the address side of the item to be mailed must be large enough to completely contain the Global Express Guaranteed Air Waybill/Shipping Invoice (shipping label), postage, endorsement, and any applicable markings. The shipping label is approximately 5.5 inches high and 9.5 inches long.
Maximum length: 46 inches
Maximum width: 35 inches
Maximum height: 46 inches
Maximum length and girth combined: 108 inches

General Conditions for Mailing
See Publication 141, *Global Express Guaranteed Service Guide,* for information about areas served in the destination country, allowable contents, packaging and labeling requirements, tracking and tracing, service standards, and other conditions for mailing.

Express Mail International (220) Price Group 7

Refer to Notice 123, *Price List*, for the applicable retail, commercial base, or commercial plus price.
Weight Limit: 66 lbs.

Express Mail International — Flat Rate Envelope and Flat Rate Boxes
The maximum weight for the Express Mail International Flat Rate Envelope and the Express Mail International Flat Rate Boxes is 20 pounds. Refer to Notice 123, *Price List*, for the applicable retail, commercial base, or commercial plus price.

Insurance (222.8)
Available for **Express Mail International merchandise shipments** only

Insured Amount not over	Fee	Insured Amount not over	Fee
$100	No Fee	For insurance coverage above $2,000, add $1.50 for each $500 or fraction thereof, up to a maximum of $5,000 per shipment.	
200	$0.85		
500	2.35		
1,000	3.85		
1,500	5.35		
2,000	6.85	$5,000 max.	$15.85

Articles Admitted	Required Customs Form/Endorsement
Correspondence and business papers.	PS Form 2976, *Customs — CN 22 and Sender's Declaration.* Endorse item clearly next to mailing label as BUSINESS PAPERS.
Merchandise samples without commercial value.	PS Form 2976, *Customs — CN 22 and Sender's Declaration.*
Merchandise and all articles subject to customs duty.	PS Form 2976-A, *Customs Declaration and Dispatch Note CP 72,* inside a PS Form 2976-E, *Customs Declaration Envelope CP 91. A* commercial invoice should be enclosed in each item.

Size Limits (221.52)
Maximum length: 36 inches
Maximum length and girth combined: 79 inches

Note:
Coins; banknotes; currency notes, including paper money; securities of any kind payable to bearer; traveler's checks; platinum, gold, and silver; precious stones; jewelry; watches; and other valuable articles are prohibited in Express Mail International shipments to Uganda.

Reciprocal Service Name: EMS Speedpost

Country Code: UG

Areas Served:

Arua	Jinja	Masindi
Bushenji	Kabale	Mbale
Busia	Kamuli	Mbarara
Entebbe	Kampala	Mubende
Fort-Portal	Kasese	Rukungiri
Gulu	Lira	Tororo
Hoima	Malaba	
Iganga	Masaka	

Priority Mail International (230) Price Group 7

Refer to Notice 123, *Price List*, for the applicable retail, commercial base, or commercial plus price.
Weight Limit: 66 lbs.

Note: *Ordinary Priority Mail International includes indemnity at no cost based on weight. (See 230.)*

Priority Mail International — Flat Rate

Flat Rate Envelopes or Small Flat Rate Priced Boxes: The maximum weight is 4 pounds. Refer to Notice 123, *Price List*, for the applicable retail, commercial base, or commercial plus price.

Flat Rate Boxes — Medium and Large: The maximum weight is 20 pounds, or the limit set by the individual country, whichever is less. Refer to Notice 123, *Price List*, for the retail, commercial base, or commercial plus price.

Insurance (232.92) NOT Available

Size Limits (231.22)

Maximum length: 42 inches
Maximum length and girth combined: 79 inches

First-Class Mail International (240) Price Group 7

For the prices and maximum weights for letters, large envelopes (flats), packages (small packets), and postcards, see Notice 123, *Price List*.

Size Limits

Letters: See 241.212
Postcards: See 241.221
Large Envelopes (Flats): See 241.232
Packages (Small Packets): See 241.242 and 241.243

Airmail M-bags (260) — Direct Sack to One Addressee Price Group 7

Refer to Notice 123, *Price List*, for the applicable retail, commercial base, or commercial plus price.
Weight Limit: 66 lbs.

Matter for the Blind (270)

Free when sent as First-Class Mail International, including Priority Mail International Flat Rate Envelopes and Small Flat Rate Priced Boxes. Weight limit: 4 pounds.
Free when sent as Priority Mail International. Weight limit: 15 pounds.

Extra Services

Certificate of Mailing (313)

Individual Pieces	Fee
Individual article (PS Form 3817)	$1.15
Firm mailing books (PS Form 3877), per article listed (minimum 3)	0.44
Duplicate copy of PS Form 3817 or PS Form 3877 (per page)	1.15
Bulk Quantities	**Fee**
First 1,000 pieces (or fraction thereof)	$6.70
Each additional 1,000 pieces (or fraction thereof)	0.80
Duplicate copy of PS Form 3606	1.15

COD and Certified **NOT** for International Mail

International Business Reply Service (382)

Fee: Envelopes up to 2 ounces $1.50; Cards $1.00

International Postal Money Order (371)

NOT Available

International Reply Coupons (381) **Fee:** $2.20

Registered Mail (330) **Fee:** $11.75

Maximum Indemnity: $47.33
Available for First-Class Mail International, including postcards and Flat Rate Envelopes and Small Flat Rate Priced Boxes, and matter for the blind or other physically handicapped persons. Not applicable to M-bags.

Restricted Delivery (350) NOT Available

Return Receipt (340) **Fee:** $2.35

Available for registered mail only.

Ukraine

Country Conditions for Mailing

Prohibitions (130)

Agricultural products.
Articles of cultural value (works of art, collectors' pieces, and antiques).
Coins; banknotes; currency; securities of any kind payable to bearer; traveler's checks; platinum, gold, and silver (manufactured or not); precious stones; jewelry; and other valuable articles are prohibited.
Medicines and medicinal products.
Passports and personal identity cards are prohibited entry in all classes of mail, including Express Mail International shipments.
Prescription narcotics and psychotropic drugs which have potentially addictive or hallucinogenic effects.
Tobacco products and manufactured tobacco substitutes.

Restrictions

1. In order to be admissible, the food items listed below must (a) be packed by the manufacturer; (b) conform to Ukraine's sanitary standards; (c) be accompanied by a certificate of conformity which has been issued by the Ukrainian State Committee for Standardization and Measures or by a comparable regulatory authority in the country of origin; (d) be addressed to an individual who is a resident of Ukraine; (e) be shipped in quantities not to exceed 2 kilograms (4 pounds) when enclosed in a First-Class Mail International shipment; or (f) be shipped in quantities not to exceed 10 kilograms (22 pounds) when enclosed in a Priority Mail International parcel or an Express Mail International item.
   Meats, fish, shell fish, milk and dairy products, birds' eggs, natural honey, fruits and nuts, coffee, tea, spices, vegetables, grains, cereals, flour, fats and oils, animal and vegetable by-products, sugar, cocoa, and other processed foodstuffs.
2. Radios and mobile telephones for personal use may be sent to Ukraine, provided that the addressee has obtained prior authorization from the Ukrainian State Center of Radio Frequencies and Telecommunications Supervision. The Center is responsible for assigning radio frequencies and registering official authorization for the design, manufacture, and use of radio-electronic equipment. Customers who require additional information about the mailing of radio-electronic equipment to Ukraine should send their inquiries directly to the Center's headquarters in Kiev. The applicable fax number is 011-38-044-450-2765.
3. Prescription medicines for personal use may be sent to Ukraine in quantities that are necessary for a complete course of treatment, provided that the addressee has obtained prior authorization from the Ukrainian Ministry of Health.
4. Funeral urns admitted for import are authorized only upon presentation of the following documentation to Customs authorities: A death certificate or any other document confirming death, issued by a competent body; or a certificate declaring that the urn does not contain other articles that may not be imported into Ukraine.

Observations

No list furnished

Customs Forms Required (123)

First-Class Mail International items and Priority Mail International Flat Rate Envelopes and Small Flat Rate Priced Boxes:
PS Form 2976 (see 123.61)
Priority Mail International parcels:
PS Form 2976-A inside 2976-E (envelope)

Global Express Guaranteed (210) Price Group 4

Refer to Notice 123, *Price List*, for the applicable retail, commercial base, or commercial plus price.
Weight Limit: 70 lbs.

Insurance (212.5)

Insured Amount not over	Fee	Insured Amount not over	Fee
$100	No Fee	For document reconstruction insurance or non-document insurance coverage above $800, add $1.00 per $100 or fraction thereof, up to a maximum of $2,499 per shipment.	
200	$1.00		
300	2.00		
400	3.00		
500	4.00		
600	5.00		
700	6.00		
800	7.00	$2,499 max.	$24.00

Value Limit (212.1)

The maximum value of a GXG shipment to this country is $2,499 or a lesser amount if limited by content or value.

Size Limits (211.22)

The surface area of the address side of the item to be mailed must be large enough to completely contain the Global Express Guaranteed Air Waybill/Shipping Invoice (shipping label), postage, endorsement, and any applicable markings. The shipping label is approximately 5.5 inches high and 9.5 inches long.
Maximum length: 46 inches
Maximum width: 35 inches
Maximum height: 46 inches
Maximum length and girth combined: 108 inches

General Conditions for Mailing

See Publication 141, *Global Express Guaranteed Service Guide,* for information about areas served in the destination country, allowable contents, packaging and labeling requirements, tracking and tracing, service standards, and other conditions for mailing.

Express Mail International (220) Price Group 4

Refer to Notice 123, *Price List*, for the applicable retail, commercial base, or commercial plus price.
Weight Limit: 44 lbs.

Express Mail International — Flat Rate Envelope and Flat Rate Boxes

The maximum weight for the Express Mail International Flat Rate Envelope and the Express Mail International Flat Rate Boxes is 20 pounds. Refer to Notice 123, *Price List*, for the applicable retail, commercial base, or commercial plus price.

Insurance (222.8)

Available for **Express Mail International merchandise shipments** only

Insured Amount not over	Fee	Insured Amount not over	Fee
$100	No Fee	For insurance coverage above $2,000, add $1.50 for each $500 or fraction thereof, up to a maximum of $5,000 per shipment.	
200	$0.85		
500	2.35		
1,000	3.85		
1,500	5.35		
2,000	6.85	$5,000 max.	$15.85

Articles Admitted	Required Customs Form/Endorsement
Correspondence, business papers, and documents.	PS Form 2976, *Customs — CN 22 and Sender's Declaration.* Endorse item clearly next to mailing label as BUSINESS PAPERS.
Merchandise samples without commercial value.	PS Form 2976-A, *Customs Declaration and Dispatch Note CP 72,* inside a PS Form 2976-E, *Customs Declaration Envelope CP 91.*
Merchandise and all articles subject to customs duty.	PS Form 2976-A, *Customs Declaration and Dispatch Note CP 72,* inside a PS Form 2976-E, *Customs Declaration Envelope CP 91.*

Size Limits (221.52)

Maximum length: 36 inches
Maximum length and girth combined: 79 inches

Notes:

1. Addressees are required to obtain import licenses/permits to receive most goods.
2. Coins; banknotes; currency notes, including paper money; securities of any kind payable to bearer; traveler's checks; platinum, gold, and silver; precious stones; jewelry; watches; and other valuable articles are prohibited in Express Mail International shipments to Ukraine.
3. Passports and personal identity cards are prohibited entry in Express Mail International shipments to Ukraine.
4. Agricultural products are prohibited entry in Express Mail International shipments to Ukraine.

Reciprocal Service Name: EMS

Country Code: UA

Areas Served:

Express Mail International is available ***only*** to the following locations:

City	Postal Code
BelayaTserkov	348000
Cherkassy	257000
Chernigov	250000
Chernovsty	274000
Dnepropetrovsk	320000
Donetsk	340000
Ivano-Frankovsk	284000
Kharkov	310000
Kherson	325000
Khmelnitskiy	280000
Kiev	252000
Kirovograd	316000
Lugansk	348000
Lutsk	263000
Lvov	290000
Nikolaev	327000
Odessa	270000
Poltava	314000
Rovno	266000
Sevastopol	335000
Simferopol	333000
Sumy	244000
Ternopol	282000
Uzhgorod	294000
Vinnitsa	286000
Zaporozhiye	330000
Zhitomir	262000

Priority Mail International (230) Price Group 4

Refer to Notice 123, *Price List*, for the applicable retail, commercial base, or commercial plus price.
Weight Limit: 66 lbs.

Note: *Ordinary Priority Mail International includes indemnity at no cost based on weight. (See 230.)*

Priority Mail International — Flat Rate

Flat Rate Envelopes or Small Flat Rate Priced Boxes: The maximum weight is 4 pounds. Refer to Notice 123, *Price List*, for the applicable retail, commercial base, or commercial plus price.

Flat Rate Boxes — Medium and Large: The maximum weight is 20 pounds, or the limit set by the individual country, whichever is less. Refer to Notice 123, *Price List*, for the retail, commercial base, or commercial plus price.

Insurance (232.92)

Available for **Priority Mail International merchandise parcels** only (see 323.72 for markings)

Insured Amount not over	Fee	Insured Amount not over	Fee
$50	$2.45	Add $1.15 for each additional $100 or fraction of insurance coverage.	
100	3.60		
200	4.75		
300	5.90		
400	7.05		
500	8.20	$5,000 max.	$59.95

Size Limits (231.22)

Maximum length: 42 inches
Maximum length and girth combined: 79 inches

First-Class Mail International (240) Price Group 4

For the prices and maximum weights for letters, large envelopes (flats), packages (small packets), and postcards, see Notice 123, *Price List*.

Size Limits

Letters: See 241.212
Postcards: See 241.221
Large Envelopes (Flats): See 241.232
Packages (Small Packets): See 241.242 and 241.243

Airmail M-bags (260) — Direct Sack to One Addressee Price Group 4

Refer to Notice 123, *Price List*, for the applicable retail, commercial base, or commercial plus price.
Weight Limit: 66 lbs.

Matter for the Blind (270)

Free when sent as First-Class Mail International, including Priority Mail International Flat Rate Envelopes and Small Flat Rate Priced Boxes. Weight limit: 4 pounds.
Free when sent as Priority Mail International. Weight limit: 15 pounds.

Extra Services

Certificate of Mailing (313)

Individual Pieces	**Fee**
Individual article (PS Form 3817)	$1.15
Firm mailing books (PS Form 3877), per article listed (minimum 3)	0.44
Duplicate copy of PS Form 3817 or PS Form 3877 (per page)	1.15
Bulk Quantities	**Fee**
First 1,000 pieces (or fraction thereof)	$6.70
Each additional 1,000 pieces (or fraction thereof)	0.80
Duplicate copy of PS Form 3606	1.15

COD and Certified **NOT** for International Mail

International Business Reply Service (382)

Fee: Envelopes up to 2 ounces $1.50; Cards $1.00

International Postal Money Order (371)

NOT Available

International Reply Coupons (381) **Fee:** $2.20

Registered Mail (330) **Fee:** $11.75

Maximum Indemnity: $47.33
Available for First-Class Mail International, including postcards and Flat Rate Envelopes and Small Flat Rate Priced Boxes, and matter for the blind or other physically handicapped persons. Not applicable to M-bags.

Restricted Delivery (350) **Fee:** $4.55

Available for registered mail with a return receipt.
Endorsements: A remettre en main propre.

Return Receipt (340) **Fee:** $2.35

Available for registered mail and insured Priority Mail International parcels only.

United Arab Emirates

Country Conditions for Mailing

Prohibitions (130)

Aerosol products.
Butane gas lighters and refills.
Firearms, ammunition, and their components.
Gold, jewels, platinum, precious stones, and silver except in insured parcels.
Perishable infectious biological substances.
Perishable noninfectious biological substances.
Polished, whitened, artificial, or imitation pearls.
Pork products.
Printed matter offensive to Arabs and Muslims.
Radioactive materials.
Radio transmitters and receivers except under permit.

Restrictions

Medicines require prior authorization.

Observations

1. Shipments, whose value does not exceed 500 dirhams and parcels that are not commercial and contain personal effects are generally exempt from all customs measures.
2. Shipments that exceed 500 dirhams in value and are commercial shipments must be accompanied by (a) the original invoices authenticated by the Consulates of the UAE; (b) authenticated certificate of origin; (c) list of the contents of the package; and (d) the certificate of exemption from duty, if applicable.

Customs Forms Required (123)

First-Class Mail International items and Priority Mail International Flat Rate Envelopes and Small Flat Rate Priced Boxes:
PS Form 2976 (see 123.61)
Priority Mail International parcels:
PS Form 2976-A inside 2976-E (envelope)

Global Express Guaranteed (210) Price Group 6

Refer to Notice 123, *Price List*, for the applicable retail, commercial base, or commercial plus price.
Weight Limit: 70 lbs.

Insurance (212.5)

Insured Amount not over	Fee	Insured Amount not over	Fee
$100	No Fee	For document reconstruction insurance or non-document insurance coverage above $800, add $1.00 per $100 or fraction thereof, up to a maximum of $2,499 per shipment.	
200	$1.00		
300	2.00		
400	3.00		
500	4.00		
600	5.00		
700	6.00		
800	7.00	$2,499 max.	$24.00

Value Limit (212.1)

The maximum value of a GXG shipment to this country is $2,499 or a lesser amount if limited by content or value.

Size Limits (211.22)

The surface area of the address side of the item to be mailed must be large enough to completely contain the Global Express Guaranteed Air Waybill/Shipping Invoice (shipping label), postage, endorsement, and any applicable markings. The shipping label is approximately 5.5 inches high and 9.5 inches long.
Maximum length: 46 inches
Maximum width: 35 inches
Maximum height: 46 inches
Maximum length and girth combined: 108 inches

General Conditions for Mailing

See Publication 141, *Global Express Guaranteed Service Guide,* for information about areas served in the destination country, allowable contents, packaging and labeling requirements, tracking and tracing, service standards, and other conditions for mailing.

Express Mail International (220) Price Group 8

Refer to Notice 123, *Price List*, for the applicable retail, commercial base, or commercial plus price.
Weight Limit: 70 lbs.

Express Mail International — Flat Rate Envelope and Flat Rate Boxes

The maximum weight for the Express Mail International Flat Rate Envelope and the Express Mail International Flat Rate Boxes is 20 pounds. Refer to Notice 123, *Price List*, for the applicable retail, commercial base, or commercial plus price.

Insurance (222.8)

Available for **Express Mail International merchandise shipments** only

Insured Amount not over	Fee	Insured Amount not over	Fee
$100	No Fee	For insurance coverage above $2,000, add $1.50 for each $500 or fraction thereof, up to a maximum of $5,000 per shipment.	
200	$0.85		
500	2.35		
1,000	3.85		
1,500	5.35		
2,000	6.85	$5,000 max.	$15.85

Articles Admitted	Required Customs Form/Endorsement
Business papers and documents.	PS Form 2976, *Customs — CN 22 and Sender's Declaration.*
Merchandise samples without commercial value and all articles not subject to customs duty.	PS Form 2976, *Customs — CN 22 and Sender's Declaration.*
Merchandise, advertising materials, or any dutiable articles.	PS Form 2976-A, *Customs Declaration and Dispatch Note CP 72,* inside a PS Form 2976-E, *Customs Declaration Envelope CP 91.*

Size Limits (221.52)

Maximum length: 36 inches
Maximum length and girth combined: 79 inches

Notes:

1. A commercial invoice must be included with all commercial shipments.
2. Coins; banknotes; currency notes, including paper money; securities of any kind payable to bearer; traveler's checks; platinum, gold, and silver; precious stones; jewelry; watches; and other valuable articles are prohibited in Express Mail International shipments to the United Arab Emirates.

Reciprocal Service Name: Mumtaz Post

Country Code: AE

Areas Served: All

Priority Mail International (230) Price Group 8

Refer to Notice 123, *Price List*, for the applicable retail, commercial base, or commercial plus price.
Weight Limit: 70 lbs.

Note: *Ordinary Priority Mail International includes indemnity at no cost based on weight. (See 230.)*

Priority Mail International — Flat Rate

Flat Rate Envelopes or Small Flat Rate Priced Boxes: The maximum weight is 4 pounds. Refer to Notice 123, *Price List*, for the applicable retail, commercial base, or commercial plus price.

Flat Rate Boxes — Medium and Large: The maximum weight is 20 pounds, or the limit set by the individual country, whichever is less. Refer to Notice 123, *Price List*, for the retail, commercial base, or commercial plus price.

Insurance (232.92)

Available for **Priority Mail International merchandise parcels** only (see 323.72 for markings)

Insured Amount not over	Fee	Insured Amount not over	Fee
$50	$2.45		
100	3.60	Add $1.15 for each additional $100 or fraction of insurance coverage.	
200	4.75		
300	5.90		
400	7.05		
500	8.20	$5,000 max.	$59.95

Size Limits (231.22)

Maximum length: 42 inches
Maximum length and girth combined: 79 inches

First-Class Mail International (240) Price Group 8

For the prices and maximum weights for letters, large envelopes (flats), packages (small packets), and postcards, see Notice 123, *Price List*.

Size Limits

Letters: See 241.212
Postcards: See 241.221
Large Envelopes (Flats): See 241.232
Packages (Small Packets): See 241.242 and 241.243

Airmail M-bags (260) — Direct Sack to One Addressee Price Group 8

Refer to Notice 123, *Price List*, for the applicable retail, commercial base, or commercial plus price.
Weight Limit: 66 lbs.

Matter for the Blind (270)

Free when sent as First-Class Mail International, including Priority Mail International Flat Rate Envelopes and Small Flat Rate Priced Boxes. Weight limit: 4 pounds.
Free when sent as Priority Mail International. Weight limit: 15 pounds.

Extra Services

Certificate of Mailing (313)

Individual Pieces	Fee
Individual article (PS Form 3817)	$1.15
Firm mailing books (PS Form 3877), per article listed (minimum 3)	0.44
Duplicate copy of PS Form 3817 or PS Form 3877 (per page)	1.15
Bulk Quantities	**Fee**
First 1,000 pieces (or fraction thereof)	$6.70
Each additional 1,000 pieces (or fraction thereof)	0.80
Duplicate copy of PS Form 3606	1.15

COD and Certified **NOT** for International Mail

International Business Reply Service (382)

Fee: Envelopes up to 2 ounces $1.50; Cards $1.00

International Postal Money Order (371)

NOT Available

International Reply Coupons (381) **Fee:** $2.20

Registered Mail (330) **Fee:** $11.75

Maximum Indemnity: $47.33
Available for First-Class Mail International, including postcards and Flat Rate Envelopes and Small Flat Rate Priced Boxes, and matter for the blind or other physically handicapped persons. Not applicable to M-bags.

Restricted Delivery (350) NOT Available

Return Receipt (340) **Fee:** $2.35

Available for registered mail and insured Priority Mail International parcels only.

Uruguay

Country Conditions for Mailing

Prohibitions (130)

Coins; banknotes; currency notes (paper money); securities payable to bearer; precious stones; jewelry; and other valuable articles. However, old coins intended for collections are admitted up to the maximum of 10 per package.
Firearms.
Lottery tickets.
Perishable infectious biological substances.
Perishable noninfectious biological substances.
Radioactive materials.

Restrictions

Plants or parts of plants must be accompanied by a health certificate.

Observations

1. Certificate of origins and detailed invoices are required for commercial shipments.
2. Applicable customs regulations on articles received in Uruguay are as follows:
   a. Up to $10 U.S., exemption.
   b. Up to $50 U.S., exemption when it can be proved that item is a gift, sent by a member of the family or containing clothes for personal use.
   c. Up to $100 U.S., exemption for the portion between 0-50, while the portion between 51-100 is subject to customs duty on importation.
   d. Over $100 U.S.: the intervention of a customs representative is obligatory.

Customs Forms Required (123)

First-Class Mail International items and Priority Mail International Flat Rate Envelopes and Small Flat Rate Priced Boxes:
PS Form 2976 (see 123.61)
Priority Mail International parcels:
PS Form 2976-A inside 2976-E (envelope)

Global Express Guaranteed (210) Price Group 8

Refer to Notice 123, *Price List*, for the applicable retail, commercial base, or commercial plus price.
Weight Limit: 70 lbs.

Insurance (212.5)

Insured Amount not over	Fee	Insured Amount not over	Fee
$100	No Fee	For document reconstruction insurance or non-document insurance coverage above $800, add $1.00 per $100 or fraction thereof, up to a maximum of $2,499 per shipment.	
200	$1.00		
300	2.00		
400	3.00		
500	4.00		
600	5.00		
700	6.00		
800	7.00	$2,499 max.	$24.00

Value Limit (212.1)

The maximum value of a GXG shipment to this country is $2,499 or a lesser amount if limited by content or value.

Size Limits (211.22)

The surface area of the address side of the item to be mailed must be large enough to completely contain the Global Express Guaranteed Air Waybill/Shipping Invoice (shipping label), postage, endorsement, and any applicable markings. The shipping label is approximately 5.5 inches high and 9.5 inches long.
Maximum length: 46 inches
Maximum width: 35 inches
Maximum height: 46 inches
Maximum length and girth combined: 108 inches

General Conditions for Mailing

See Publication 141, *Global Express Guaranteed Service Guide,* for information about areas served in the destination country, allowable contents, packaging and labeling requirements, tracking and tracing, service standards, and other conditions for mailing.

Express Mail International (220) Price Group 9

Refer to Notice 123, *Price List*, for the applicable retail, commercial base, or commercial plus price.
Weight Limit: 44 lbs.

Express Mail International — Flat Rate Envelope and Flat Rate Boxes

The maximum weight for the Express Mail International Flat Rate Envelope and the Express Mail International Flat Rate Boxes is 20 pounds. Refer to Notice 123, *Price List*, for the applicable retail, commercial base, or commercial plus price.

Insurance (222.8)

Available for **Express Mail International merchandise shipments** only

Insured Amount not over	Fee	Insured Amount not over	Fee
$100	No Fee	For insurance coverage above $2,000, add $1.50 for each $500 or fraction thereof, up to a maximum of $5,000 per shipment.	
200	$0.85		
500	2.35		
1,000	3.85		
1,500	5.35		
2,000	6.85	$5,000 max.	$15.85

Articles Admitted	Required Customs Form/Endorsement
Business papers and documents.	No form required. Endorse item clearly next to mailing label as BUSINESS PAPERS.
Merchandise samples without commercial value, microfilm, and microfiche.	PS Form 2976, *Customs — CN 22 and Sender's Declaration.*
Merchandise and all articles subject to customs duty.	PS Form 2976-A, *Customs Declaration and Dispatch Note CP 72,* inside a PS Form 2976-E, *Customs Declaration Envelope CP 91*.

Size Limits (221.52)

Maximum length: 36 inches
Maximum length and girth combined: 79 inches

Note:
Coins; banknotes; currency notes, including paper money; securities of any kind payable to bearer; traveler's checks; platinum, gold, and silver; precious stones; jewelry; watches; and other valuable articles are prohibited in Express Mail International shipments to Uruguay.

Reciprocal Service Name: CAI

Country Code: UY

Areas Served: All

Priority Mail International (230) Price Group 9

Refer to Notice 123, *Price List*, for the applicable retail, commercial base, or commercial plus price.
Weight Limit: 66 lbs.

Note: *Ordinary Priority Mail International includes indemnity at no cost based on weight. (See 230.)*

Priority Mail International — Flat Rate
Flat Rate Envelopes or Small Flat Rate Priced Boxes: The maximum weight is 4 pounds. Refer to Notice 123, *Price List*, for the applicable retail, commercial base, or commercial plus price.

Flat Rate Boxes — Medium and Large: The maximum weight is 20 pounds, or the limit set by the individual country, whichever is less. Refer to Notice 123, *Price List*, for the retail, commercial base, or commercial plus price.

Insurance (232.92) NOT Available

Size Limits (231.22)
Maximum length: 42 inches
Maximum length and girth combined: 79 inches

First-Class Mail International (240) Price Group 9
For the prices and maximum weights for letters, large envelopes (flats), packages (small packets), and postcards, see Notice 123, *Price List*.

Size Limits
Letters: See 241.212
Postcards: See 241.221
Large Envelopes (Flats): See 241.232
Packages (Small Packets): See 241.242 and 241.243

Airmail M-bags (260) — Direct Sack to One Addressee Price Group 9

Refer to Notice 123, *Price List*, for the applicable retail, commercial base, or commercial plus price.
Weight Limit: 66 lbs.

Matter for the Blind (270)
Free when sent as First-Class Mail International, including Priority Mail International Flat Rate Envelopes and Small Flat Rate Priced Boxes. Weight limit: 4 pounds.
Free when sent as Priority Mail International. Weight limit: 15 pounds.

Extra Services

Certificate of Mailing (313)

Individual Pieces	Fee
Individual article (PS Form 3817)	$1.15
Firm mailing books (PS Form 3877), per article listed (minimum 3)	0.44
Duplicate copy of PS Form 3817 or PS Form 3877 (per page)	1.15
Bulk Quantities	**Fee**
First 1,000 pieces (or fraction thereof)	$6.70
Each additional 1,000 pieces (or fraction thereof)	0.80
Duplicate copy of PS Form 3606	1.15

COD and Certified **NOT** for International Mail

International Business Reply Service (382)
Fee: Envelopes up to 2 ounces $1.50; Cards $1.00

International Postal Money Order (371)
NOT Available

International Reply Coupons (381) **Fee:** $2.20

Registered Mail (330) **Fee:** $11.75
Maximum Indemnity: $47.33
Available for First-Class Mail International, including postcards and Flat Rate Envelopes and Small Flat Rate Priced Boxes, and matter for the blind or other physically handicapped persons. Not applicable to M-bags.

Restricted Delivery (350) NOT Available

Return Receipt (340) **Fee:** $2.35
Available for registered mail only.

Uzbekistan

Country Conditions for Mailing

Prohibitions (130)

Coins, bank notes in circulation, checks, postage stamps, currency, securities of any kind payable to bearer, or foreign currency. Uzbekistan will not accept liability in cases of loss or damage to such items if they are accepted.
Perishable infectious biological substances.
Perishable noninfectious biological substances.
Press publications, manuscripts, cliches, drawings, films, negatives, cinematographic films, video recordings, audio recordings, gramophone records that are designed to undermine the State and social system and to violate the territorial integrity, the political independence and the foundations of the State, advocating war, terrorism, violence, nationalism and religious hate, fascism in all its forms, and materials with pornographic content.
Radioactive materials.
The government of Uzbekistan has instituted a temporary prohibition against mailing meats and meat products, milk and dairy products, and seeds to Uzbekistan.

Restrictions

Cinematographic films, video recordings, and audio recordings may be imported with the authorization of the Ministry of Culture.
Many items are admitted as imports under licenses issued by the Ministry of Foreign and Economic Affairs in Uzbekistan.
Seeds and other agricultural products are permitted only under authorization issued by the Head of Quarantine Inspection in Uzbekistan.

Observations

None

Customs Forms Required (123)

First-Class Mail International items and Priority Mail International Flat Rate Envelopes and Small Flat Rate Priced Boxes:
PS Form 2976 (see 123.61)
Priority Mail International parcels:
PS Form 2976-A inside 2976-E (envelope)

Global Express Guaranteed (210) Price Group 4

Refer to Notice 123, *Price List*, for the applicable retail, commercial base, or commercial plus price.
Weight Limit: 70 lbs.

Insurance (212.5)

Insured Amount not over	Fee	Insured Amount not over	Fee
$100	No Fee	For document reconstruction insurance or non-document insurance coverage above $800, add $1.00 per $100 or fraction thereof, up to a maximum of $2,499 per shipment.	
200	$1.00		
300	2.00		
400	3.00		
500	4.00		
600	5.00		
700	6.00		
800	7.00	$2,499 max.	$24.00

Value Limit (212.1)

The maximum value of a GXG shipment to this country is $2,499 or a lesser amount if limited by content or value.

Size Limits (211.22)

The surface area of the address side of the item to be mailed must be large enough to completely contain the Global Express Guaranteed Air Waybill/Shipping Invoice (shipping label), postage, endorsement, and any applicable markings. The shipping label is approximately 5.5 inches high and 9.5 inches long.
Maximum length: 46 inches
Maximum width: 35 inches
Maximum height: 46 inches
Maximum length and girth combined: 108 inches

General Conditions for Mailing

See Publication 141, *Global Express Guaranteed Service Guide,* for information about areas served in the destination country, allowable contents, packaging and labeling requirements, tracking and tracing, service standards, and other conditions for mailing.

Express Mail International (220) Price Group 6

Refer to Notice 123, *Price List*, for the applicable retail, commercial base, or commercial plus price.
Weight Limit: 66 lbs.

Express Mail International — Flat Rate Envelope and Flat Rate Boxes

The maximum weight for the Express Mail International Flat Rate Envelope and the Express Mail International Flat Rate Boxes is 20 pounds. Refer to Notice 123, *Price List*, for the applicable retail, commercial base, or commercial plus price.

Insurance (222.8)

Available for **Express Mail International merchandise shipments** only

Insured Amount not over	Fee	Insured Amount not over	Fee
$100	No Fee	For insurance coverage above $2,000, add $1.50 for each $500 or fraction thereof, up to a maximum of $5,000 per shipment.	
200	$0.85		
500	2.35		
1,000	3.85		
1,500	5.35		
2,000	6.85	$5,000 max.	$15.85

Articles Admitted	Required Customs Form/Endorsement
Personal correspondence, business papers, and documents.	PS Form 2976, *Customs — CN 22 and Sender's Declaration*.
Merchandise samples without commercial value.	PS Form 2976-A, *Customs Declaration and Dispatch Note CP 72*, inside a PS Form 2976-E, *Customs Declaration Envelope CP 91*.
Merchandise and all articles subject to customs duty.	PS Form 2976-A, *Customs Declaration and Dispatch Note CP 72*, inside a PS Form 2976-E, *Customs Declaration Envelope CP 91.*

Size Limits (221.52)

Maximum length: 60 inches
Maximum length and girth combined: 108 inches

Note:
Coins; banknotes; currency notes, including paper money; securities of any kind payable to bearer; traveler's checks; platinum, gold, and silver; precious stones; jewelry; watches; and other valuable articles are prohibited in Express Mail International shipments to Uzbekistan.

Reciprocal Service Name: emsUzbekistan

Country Code: UZ

Areas Served: All

Priority Mail International (230) Price Group 6

Refer to Notice 123, *Price List*, for the applicable retail, commercial base, or commercial plus price.
Weight Limit: 70 lbs.

Note: *Ordinary Priority Mail International includes indemnity at no cost based on weight. (See 230.)*

Priority Mail International — Flat Rate
Flat Rate Envelopes or Small Flat Rate Priced Boxes: The maximum weight is 4 pounds. Refer to Notice 123, *Price List*, for the applicable retail, commercial base, or commercial plus price.

Flat Rate Boxes — Medium and Large: The maximum weight is 20 pounds, or the limit set by the individual country, whichever is less. Refer to Notice 123, *Price List*, for the retail, commercial base, or commercial plus price.

Insurance (232.92)
Available for **Priority Mail International merchandise parcels** only (see 323.72 for markings)

Insured Amount not over	Fee	Insured Amount not over	Fee
$50	$2.45		
100	3.60	Add $1.15 for each additional $100 or fraction of insurance coverage.	
200	4.75		
300	5.90		
400	7.05		
500	8.20	$5,000 max.	$59.95

Size Limits (231.22)
Maximum length: 42 inches
Maximum length and girth combined: 79 inches

First-Class Mail International (240) Price Group 6
For the prices and maximum weights for letters, large envelopes (flats), packages (small packets), and postcards, see Notice 123, *Price List*.

Size Limits
Letters: See 241.212
Postcards: See 241.221
Large Envelopes (Flats): See 241.232
Packages (Small Packets): See 241.242 and 241.243

Airmail M-bags (260) — Direct Sack to One Addressee Price Group 6

Refer to Notice 123, *Price List*, for the applicable retail, commercial base, or commercial plus price.
Weight Limit: 44 lbs.

Matter for the Blind (270)
Free when sent as First-Class Mail International, including Priority Mail International Flat Rate Envelopes and Small Flat Rate Priced Boxes. Weight limit: 4 pounds.
Free when sent as Priority Mail International. Weight limit: 15 pounds.

Extra Services

Certificate of Mailing (313)

Individual Pieces	Fee
Individual article (PS Form 3817)	$1.15
Firm mailing books (PS Form 3877), per article listed (minimum 3)	0.44
Duplicate copy of PS Form 3817 or PS Form 3877 (per page)	1.15
Bulk Quantities	**Fee**
First 1,000 pieces (or fraction thereof)	$6.70
Each additional 1,000 pieces (or fraction thereof)	0.80
Duplicate copy of PS Form 3606	1.15

COD and Certified **NOT** for International Mail

International Business Reply Service (382)
Fee: Envelopes up to 2 ounces $1.50; Cards $1.00

International Postal Money Order (371)
NOT Available

International Reply Coupons (381) **Fee:** $2.20

Registered Mail (330) **Fee:** $11.75
Maximum Indemnity: $47.33
Available for First-Class Mail International, including postcards and Flat Rate Envelopes and Small Flat Rate Priced Boxes, and matter for the blind or other physically handicapped persons. Not applicable to M-bags.

Restricted Delivery (350) **Fee:** $4.55
Available for registered mail with a return receipt.
Endorsements: A remettre en main propre.

Return Receipt (340) **Fee:** $2.35
Available for registered mail and insured Priority Mail International parcels only.

Vanuatu

Country Conditions for Mailing

Prohibitions (130)
Perishable infectious biological substances.
Radioactive materials.

Restrictions
No list furnished.

Observations
None

Customs Forms Required (123)
First-Class Mail International items and Priority Mail International Flat Rate Envelopes and Small Flat Rate Priced Boxes:
PS Form 2976 (see 123.61)
Priority Mail International parcels:
PS Form 2976-A inside 2976-E (envelope)

Global Express Guaranteed (210) Price Group 8

Refer to Notice 123, *Price List*, for the applicable retail, commercial base, or commercial plus price.
Weight Limit: 70 lbs.

Insurance (212.5)

Insured Amount not over	Fee	Insured Amount not over	Fee
$100	No Fee	For document reconstruction insurance or non-document insurance coverage above $800, add $1.00 per $100 or fraction thereof, up to a maximum of $2,499 per shipment.	
200	$1.00		
300	2.00		
400	3.00		
500	4.00		
600	5.00		
700	6.00		
800	7.00	$2,499 max.	$24.00

Value Limit (212.1)
The maximum value of a GXG shipment to this country is $2,499 or a lesser amount if limited by content or value.

Size Limits (211.22)
The surface area of the address side of the item to be mailed must be large enough to completely contain the Global Express Guaranteed Air Waybill/Shipping Invoice (shipping label), postage, endorsement, and any applicable markings. The shipping label is approximately 5.5 inches high and 9.5 inches long.
Maximum length: 46 inches
Maximum width: 35 inches
Maximum height: 46 inches
Maximum length and girth combined: 108 inches

General Conditions for Mailing
See Publication 141, *Global Express Guaranteed Service Guide,* for information about areas served in the destination country, allowable contents, packaging and labeling requirements, tracking and tracing, service standards, and other conditions for mailing.

Express Mail International (220) Price Group 6

Refer to Notice 123, *Price List*, for the applicable retail, commercial base, or commercial plus price.
Weight Limit: 55 lbs.

Express Mail International — Flat Rate Envelope and Flat Rate Boxes
The maximum weight for the Express Mail International Flat Rate Envelope and the Express Mail International Flat Rate Boxes is 20 pounds. Refer to Notice 123, *Price List*, for the applicable retail, commercial base, or commercial plus price.

Insurance (222.8)
Note: Express Mail International merchandise insurance is not available to this country. Document reconstruction insurance coverage is provided, at no additional cost, to a maximum of $100 per shipment. See 222.72.

Articles Admitted	Required Customs Form/Endorsement
Correspondence and business papers.	PS Form 2976, *Customs — CN 22 and Sender's Declaration.* Endorse item clearly next to mailing label as BUSINESS PAPERS.
Merchandise samples without commercial value.	PS Form 2976, *Customs — CN 22 and Sender's Declaration.*

Size Limits (221.52)
Maximum length: 36 inches
Maximum length and girth combined: 79 inches

Notes:
1. Merchandise and all articles subject to customs duty are prohibited.
2. Coins; banknotes; currency notes, including paper money; securities of any kind payable to bearer; traveler's checks; platinum, gold, and silver; precious stones; jewelry; watches; and other valuable articles are prohibited in Express Mail International shipments to Vanuatu.

Reciprocal Service Name: EMS
(**Note:** Service is available to Vanuatu but not from it.)

Country Code: VU

Areas Served:
Express Mail International is available ***only*** to the following locations:
Port Vila
Santo

Priority Mail International (230) Price Group 6

Refer to Notice 123, *Price List*, for the applicable retail, commercial base, or commercial plus price.
Weight Limit: 44 lbs.

Note: *Ordinary Priority Mail International includes indemnity at no cost based on weight. (See 230.)*

Priority Mail International — Flat Rate
Flat Rate Envelopes or Small Flat Rate Priced Boxes: The maximum weight is 4 pounds. Refer to Notice 123, *Price List*, for the applicable retail, commercial base, or commercial plus price.

Flat Rate Boxes — Medium and Large: The maximum weight is 20 pounds, or the limit set by the individual country, whichever is less. Refer to Notice 123, *Price List*, for the retail, commercial base, or commercial plus price.

Insurance (232.92) NOT Available

Size Limits (231.22)
Maximum length: 42 inches
Maximum length and girth combined: 79 inches

First-Class Mail International (240) Price Group 6
For the prices and maximum weights for letters, large envelopes (flats), packages (small packets), and postcards, see Notice 123, *Price List*.

Size Limits
Letters: See 241.212
Postcards: See 241.221
Large Envelopes (Flats): See 241.232
Packages (Small Packets): See 241.242 and 241.243

Airmail M-bags (260) — Direct Sack to One Addressee Price Group 6

Refer to Notice 123, *Price List*, for the applicable retail, commercial base, or commercial plus price.
Weight Limit: 66 lbs.

Matter for the Blind (270)
Free when sent as First-Class Mail International, including Priority Mail International Flat Rate Envelopes and Small Flat Rate Priced Boxes. Weight limit: 4 pounds.
Free when sent as Priority Mail International. Weight limit: 15 pounds.

Extra Services

Certificate of Mailing (313)

Individual Pieces	Fee
Individual article (PS Form 3817)	$1.15
Firm mailing books (PS Form 3877), per article listed (minimum 3)	0.44
Duplicate copy of PS Form 3817 or PS Form 3877 (per page)	1.15
Bulk Quantities	**Fee**
First 1,000 pieces (or fraction thereof)	$6.70
Each additional 1,000 pieces (or fraction thereof)	0.80
Duplicate copy of PS Form 3606	1.15

COD and Certified **NOT** for International Mail

International Business Reply Service (382)
Fee: Envelopes up to 2 ounces $1.50; Cards $1.00

International Postal Money Order (371)
NOT Available

International Reply Coupons (381) **Fee:** $2.20

Registered Mail (330) **Fee:** $11.75
Maximum Indemnity: $47.33
Available for First-Class Mail International, including postcards and Flat Rate Envelopes and Small Flat Rate Priced Boxes, and matter for the blind or other physically handicapped persons. Not applicable to M-bags.

Restricted Delivery (350) NOT Available

Return Receipt (340) **Fee:** $2.35
Available for registered mail only.

Vatican City

Country Conditions for Mailing

Prohibitions (130)
Arms and weapons.
Human remains.
Live plants and animals.
Perishable infectious biological substances.
Perishable noninfectious biological substances.
Radioactive materials.
Same as Italy.

Restrictions
No list furnished.

Observations
1. A parcel may be addressed to a street address or to a post office box. A local telephone number for the addressee should be provided when the item is addressed to a street address and must be provided when the item is addressed to a post office box.
2. For parcels, an invoice, in duplicate, is required for all commercial shipments regardless of value and all personal shipments valued at $300 or more. The invoices must be affixed to the outside of the parcel or may be enclosed in PS Form 2976-E with the customs declaration.

Customs Forms Required (123)
First-Class Mail International items and Priority Mail International Flat Rate Envelopes and Small Flat Rate Priced Boxes:
PS Form 2976 (see 123.61)
Priority Mail International parcels:
PS Form 2976-A inside 2976-E (envelope)

Global Express Guaranteed (210) Price Group 3

Refer to Notice 123, *Price List*, for the applicable retail, commercial base, or commercial plus price.
Weight Limit: 70 lbs.

Insurance (212.5)

Insured Amount not over	Fee	Insured Amount not over	Fee
$100	No Fee	For document reconstruction insurance or non-document insurance coverage above $800, add $1.00 per $100 or fraction thereof, up to a maximum of $2,499 per shipment.	
200	$1.00		
300	2.00		
400	3.00		
500	4.00		
600	5.00		
700	6.00		
800	7.00	$2,499 max.	$24.00

Value Limit (212.1)
The maximum value of a GXG shipment to this country is $2,499 or a lesser amount if limited by content or value.

Size Limits (211.22)
The surface area of the address side of the item to be mailed must be large enough to completely contain the Global Express Guaranteed Air Waybill/Shipping Invoice (shipping label), postage, endorsement, and any applicable markings. The shipping label is approximately 5.5 inches high and 9.5 inches long.
Maximum length: 46 inches
Maximum width: 35 inches
Maximum height: 46 inches
Maximum length and girth combined: 108 inches

General Conditions for Mailing
See Publication 141, *Global Express Guaranteed Service Guide,* for information about areas served in the destination country, allowable contents, packaging and labeling requirements, tracking and tracing, service standards, and other conditions for mailing.

Express Mail International (220) Price Group 5

Refer to Notice 123, *Price List*, for the applicable retail, commercial base, or commercial plus price.
Weight Limit: 66 lbs.

Express Mail International — Flat Rate Envelope and Flat Rate Boxes
The maximum weight for the Express Mail International Flat Rate Envelope and the Express Mail International Flat Rate Boxes is 20 pounds. Refer to Notice 123, *Price List*, for the applicable retail, commercial base, or commercial plus price.

Insurance (222.8)
Available for **Express Mail International merchandise shipments** only

Insured Amount not over	Fee	Insured Amount not over	Fee
$100	No Fee	For insurance coverage above $2,000, add $1.50 for each $500 or fraction thereof, up to a maximum of $5,000 per shipment.	
200	$0.85		
500	2.35		
1,000	3.85		
1,500	5.35		
2,000	6.85	$5,000 max.	$15.85

Articles Admitted	Required Customs Form/Endorsement
Any kind of written communications including legal documents, instruments, and manuscripts; computer data, including magnetic tapes, magnetic disks, punch cards, and recording tapes.	PS Form 2976, *Customs — CN 22 and Sender's Declaration.*
Merchandise samples without commercial value.	PS Form 2976-A, *Customs Declaration and Dispatch Note CP 72,* inside a PS Form 2976-E, *Customs Declaration Envelope CP 91.*
Merchandise and all articles subject to customs duty.	PS Form 2976-A, *Customs Declaration and Dispatch Note CP 72,* inside a PS Form 2976-E, *Customs Declaration Envelope CP 91.* An invoice, in duplicate, is required for all commercial shipments regardless of value and all personal shipments valued at $300 or more. The invoices must be either affixed to the outside of the parcel or enclosed in PS Form 2976-E with the customs declaration.

Size Limits (221.52)
Maximum length: 60 inches
Maximum length and girth combined: 108 inches

Notes:
1. An invoice, in duplicate, is required for all commercial shipments regardless of value and for all personal shipments valued at $300 or more. The invoices must be either affixed to the outside of the parcel or enclosed in PS Form 2976-E with the customs declaration.
2. Arms, weapons, and human remains are prohibited.
3. Coins; banknotes; currency notes, including paper money; securities of any kind payable to bearer; traveler's checks; platinum, gold, and silver; precious stones; jewelry; watches; and other valuable articles are prohibited in Express Mail International shipments to Vatican City.
4. An Express Mail International shipment may be addressed to a street address or to a post office box. A local telephone number for the addressee should be provided when the item is addressed to a street address and must be provided when the item is addressed to a post office box.

Reciprocal Service Name: There is no reciprocal service.

Country Code: VA

Areas Served: All

Priority Mail International (230) Price Group 5

Refer to Notice 123, *Price List*, for the applicable retail, commercial base, or commercial plus price.
Weight Limit: 44 lbs.

Note: *Ordinary Priority Mail International includes indemnity at no cost based on weight. (See 230.)*

Priority Mail International — Flat Rate
Flat Rate Envelopes or Small Flat Rate Priced Boxes: The maximum weight is 4 pounds. Refer to Notice 123, *Price List*, for the applicable retail, commercial base, or commercial plus price.

Flat Rate Boxes — Medium and Large: The maximum weight is 20 pounds, or the limit set by the individual country, whichever is less. Refer to Notice 123, *Price List*, for the retail, commercial base, or commercial plus price.

Insurance (232.92)
Available for **Priority Mail International merchandise parcels** only (see 323.72 for markings)

Insured Amount not over	Fee	Insured Amount not over	Fee
$50	$2.45		
100	3.60	Add $1.15 for each additional $100 or fraction of insurance coverage.	
200	4.75		
300	5.90		
400	7.05		
500	8.20	$2,380 max.	$30.05

Size Limits (231.22)
Maximum length: 60 inches
Maximum length and girth combined: 108 inches

First-Class Mail International (240) Price Group 5
For the prices and maximum weights for letters, large envelopes (flats), packages (small packets), and postcards, see Notice 123, *Price List*.

Size Limits
Letters: See 241.212
Postcards: See 241.221
Large Envelopes (Flats): See 241.232
Packages (Small Packets): See 241.242 and 241.243

Airmail M-bags (260) — Direct Sack to One Addressee Price Group 5

Refer to Notice 123, *Price List*, for the applicable retail, commercial base, or commercial plus price.
Weight Limit: 66 lbs.

Matter for the Blind (270)
Free when sent as First-Class Mail International, including Priority Mail International Flat Rate Envelopes and Small Flat Rate Priced Boxes. Weight limit: 4 pounds.
Free when sent as Priority Mail International. Weight limit: 15 pounds.

Extra Services

Certificate of Mailing (313)

Individual Pieces	Fee
Individual article (PS Form 3817)	$1.15
Firm mailing books (PS Form 3877), per article listed (minimum 3)	0.44
Duplicate copy of PS Form 3817 or PS Form 3877 (per page)	1.15
Bulk Quantities	**Fee**
First 1,000 pieces (or fraction thereof)	$6.70
Each additional 1,000 pieces (or fraction thereof)	0.80
Duplicate copy of PS Form 3606	1.15

COD and Certified **NOT** for International Mail

International Business Reply Service (382)
Fee: Envelopes up to 2 ounces $1.50; Cards $1.00

International Postal Money Order (371)
NOT Available

International Reply Coupons (381) **Fee:** $2.20

Registered Mail (330) **Fee:** $11.75
Maximum Indemnity: $47.33
Available for First-Class Mail International, including postcards and Flat Rate Envelopes and Small Flat Rate Priced Boxes, and matter for the blind or other physically handicapped persons. Not applicable to M-bags.

Restricted Delivery (350) **Fee:** $4.55
Available for registered mail with a return receipt.
Endorsements: A remettre en main propre.

Return Receipt (340) **Fee:** $2.35
Available for registered mail and insured Priority Mail International parcels only.

Venezuela

Country Conditions for Mailing

Prohibitions (130)

Cigarette papers.
Coffee, coffee extracts, and similar preparations containing coffee.
Coins; banknotes; currency notes (paper money); traveler's checks; securities payable to bearer; platinum, gold, and silver (manufactured or not); precious stones; jewelry; and other valuable articles.
Credit cards.
Lottery and similar tickets.
Natural and cultivated pearls.
Pension checks.
Perishable infectious biological substances.
Perishable noninfectious biological substances.
Radioactive materials.

Restrictions

Prior authorization of the Venezuelan authorities is required for most foodstuffs, plants and plant parts, and most merchandise.
Pharmaceutical specialties/products must be authorized by the Minister of Health, Agriculture and Boviculture of Venezuela.

Observations

1. First-Class Mail International items may not contain dutiable articles.
2. Import licenses/permits are required for most goods. Therefore, senders should ascertain from the addressee before mailing whether the necessary documents are held.
3. Items containing printed matter must have affixed to the wrapper PS Form 2976, *Customs — CN 22 and Sender's Declaration*.
4. Customs duty is generally assessed on printed matter.

Customs Forms Required (123)

First-Class Mail International items and Priority Mail International Flat Rate Envelopes and Small Flat Rate Priced Boxes:
PS Form 2976 (see 123.61)
Priority Mail International parcels:
PS Form 2976-A inside 2976-E (envelope)

Global Express Guaranteed (210) Price Group 8

Refer to Notice 123, *Price List*, for the applicable retail, commercial base, or commercial plus price.
Weight Limit: 70 lbs.

Insurance (212.5)

Insured Amount not over	Fee	Insured Amount not over	Fee
$100	No Fee	For document reconstruction insurance or non-document insurance coverage above $800, add $1.00 per $100 or fraction thereof, up to a maximum of $2,499 per shipment.	
200	$1.00		
300	2.00		
400	3.00		
500	4.00		
600	5.00		
700	6.00		
800	7.00	$2,499 max.	$24.00

Value Limit (212.1)

The maximum value of a GXG shipment to this country is $2,499 or a lesser amount if limited by content or value.

Size Limits (211.22)

The surface area of the address side of the item to be mailed must be large enough to completely contain the Global Express Guaranteed Air Waybill/Shipping Invoice (shipping label), postage, endorsement, and any applicable markings. The shipping label is approximately 5.5 inches high and 9.5 inches long.
Maximum length: 46 inches
Maximum width: 35 inches
Maximum height: 46 inches
Maximum length and girth combined: 108 inches

General Conditions for Mailing

See Publication 141, *Global Express Guaranteed Service Guide,* for information about areas served in the destination country, allowable contents, packaging and labeling requirements, tracking and tracing, service standards, and other conditions for mailing.

Express Mail International (220) Price Group 9

Refer to Notice 123, *Price List*, for the applicable retail, commercial base, or commercial plus price.
Weight Limit: 66 lbs.

Express Mail International — Flat Rate Envelope and Flat Rate Boxes

The maximum weight for the Express Mail International Flat Rate Envelope and the Express Mail International Flat Rate Boxes is 20 pounds. Refer to Notice 123, *Price List*, for the applicable retail, commercial base, or commercial plus price.

Insurance (222.8)

Note: Express Mail International merchandise insurance is not available to this country. Document reconstruction insurance coverage is provided, at no additional cost, to a maximum of $100 per shipment. See 222.72.

Articles Admitted	Required Customs Form/Endorsement
Business papers and documents.	No form required. Endorse item clearly next to mailing label as BUSINESS PAPERS.
Merchandise samples without commercial value and computer data.	PS Form 2976, *Customs — CN 22 and Sender's Declaration.*

Size Limits (221.52)

Maximum length: 36 inches
Maximum length and girth combined: 79 inches

Notes:

1. Merchandise and all articles subject to customs duty are prohibited in Express Mail International shipments.
2. Coins; banknotes; currency notes, including paper money; securities of any kind payable to bearer; traveler's checks; platinum, gold, and silver; precious stones; jewelry; watches; and other valuable articles are prohibited in Express Mail International shipments to Venezuela.

Reciprocal Service Name: CAI

Country Code: VE

Areas Served: All

Priority Mail International (230) Price Group 9

Refer to Notice 123, *Price List*, for the applicable retail, commercial base, or commercial plus price.
Weight Limit: 66 lbs.

Note: *Ordinary Priority Mail International includes indemnity at no cost based on weight. (See 230.)*

Priority Mail International — Flat Rate

Flat Rate Envelopes or Small Flat Rate Priced Boxes: The maximum weight is 4 pounds. Refer to Notice 123, *Price List*, for the applicable retail, commercial base, or commercial plus price.

Flat Rate Boxes — Medium and Large: The maximum weight is 20 pounds, or the limit set by the individual country, whichever is less. Refer to Notice 123, *Price List*, for the retail, commercial base, or commercial plus price.

Insurance (232.92) NOT Available

Size Limits (231.22)

Maximum length: 42 inches
Maximum length and girth combined: 79 inches

First-Class Mail International (240) Price Group 9

For the prices and maximum weights for letters, large envelopes (flats), packages (small packets), and postcards, see Notice 123, *Price List*.

Size Limits

Letters: See 241.212
Postcards: See 241.221
Large Envelopes (Flats): See 241.232
Packages (Small Packets): See 241.242 and 241.243

Airmail M-bags (260) — Direct Sack to One Addressee Price Group 9

Refer to Notice 123, *Price List*, for the applicable retail, commercial base, or commercial plus price.
Weight Limit: 66 lbs.

Matter for the Blind (270)

Free when sent as First-Class Mail International, including Priority Mail International Flat Rate Envelopes and Small Flat Rate Priced Boxes. Weight limit: 4 pounds.
Free when sent as Priority Mail International. Weight limit: 15 pounds.

Extra Services

Certificate of Mailing (313)

Individual Pieces	Fee
Individual article (PS Form 3817)	$1.15
Firm mailing books (PS Form 3877), per article listed (minimum 3)	0.44
Duplicate copy of PS Form 3817 or PS Form 3877 (per page)	1.15
Bulk Quantities	**Fee**
First 1,000 pieces (or fraction thereof)	$6.70
Each additional 1,000 pieces (or fraction thereof)	0.80
Duplicate copy of PS Form 3606	1.15

COD and Certified **NOT** for International Mail

International Business Reply Service (382)

Fee: Envelopes up to 2 ounces $1.50; Cards $1.00

International Postal Money Order (371)

NOT Available

International Reply Coupons (381) **Fee:** $2.20

Registered Mail (330) **Fee:** $11.75

Maximum Indemnity: $47.33
Available for First-Class Mail International, including postcards and Flat Rate Envelopes and Small Flat Rate Priced Boxes, and matter for the blind or other physically handicapped persons. Not applicable to M-bags.

Restricted Delivery (350) NOT Available

Return Receipt (340) **Fee:** $2.35

Available for registered mail only.

Vietnam

Country Conditions for Mailing

Prohibitions (130)

Arms of all kinds, munitions, war material, and accessories.
Cigarettes and cigars.
Coins; banknotes; currency notes; securities payable to bearer; platinum, gold, or silver (manufactured or not); precious stones; jewelry; and other valuable articles.
Cosmetics, with the exception of Harmonized Systems (HS) Code 3600 (oral and hygiene dental products in individual packaging) and HS Code 3700 (preshave, shaving, or aftershave preparations).
Invisible ink, codes, cyphers, symbols or other types of secret correspondence, and shorthand notes.
Mobile (cellular) telephones.
Perishable infectious biological substances.
Products made from non-Vietnamese tobacco.
Radio transmitters and receivers and radio set accessories of any kind.
Radioactive materials.
Sealed tinned foodstuffs.
Unused postage stamps.
Used clothing, blankets, mosquito nets, and shoes.

Restrictions

Any kind of merchandise of commercial value sent for trade must have the authorization of the Ministry of External Trade of the Socialist Republic of Vietnam.
Currency, postage stamps for sale or exchange, checks, and securities and other financial instruments must be licensed by the U.S. Treasury Department.
Paintings, pictures, books, newspapers, cinema films, photographic films, records, miscellaneous articles for the stage, all other literary and artistic productions, objects of art and of sculpture, all kinds of children's toys must have the authorization of the Ministry of Culture of the Socialist Republic of Vietnam.
The following quantity limits are imposed by Vietnam on the indicated items:

Commodity	Quantity Limit
Coffee	200 g
Tea	500 g
Paddy	1000 g
Rice	1000 g
Beans (all kinds)	1000 g
Dried Manioc	1000 g
Dried sweet potatoes	1000 g
Groundnuts	1000 g
Cooked fat	1000 g
Dried meat	1000 g
Salted meat	1000 g
Dried fish	1000 g
Dried cuttlefish	1000 g

Observations

1. Due to a trade embargo, the U.S. Department of Commerce limits the items mailed to Vietnam to the following:
   a. Printed books, pamphlets and miscellaneous publications, including bound newspapers and periodicals; children's picture and painting books; newspapers and periodicals, unbound; music books, sheet music, calendar blocks, paper; and advertising printed matter exclusively related to developed motion picture films, books, miscellaneous publications, newspapers, and periodicals.
   b. Commercial phonograph records, recorded; and prerecorded records reproducing in whole or in part, the content of printed books, pamphlets and miscellaneous publications, including newspapers and periodicals.
   c. Motion picture film and soundtrack — exposed and developed.
   d. Exposed and developed microfilm reproducing, in whole or in part, the content of printed books, pamphlets and miscellaneous publications including newspapers and periodicals; children's picture and painting books: and music books, sheet music and calendars.
   e. Merchandise shipments other than gifts and gifts valued at $200 and above, are prohibited unless the sender has a validated export license issued by the Office of Export Administration, U.S. Department of Commerce, Washington, D.C. 20230.
2. Gift shipments containing merchandise value at under $200 may be mailed without a validated export license. Mark address side of shipment "GIFT—EXPORT LICENSE NOT REQUIRED."

Customs Forms Required (123)

First-Class Mail International items and Priority Mail International Flat Rate Envelopes and Small Flat Rate Priced Boxes:
PS Form 2976 (see 123.61)
Priority Mail International parcels:
PS Form 2976-A inside 2976-E (envelope)

Global Express Guaranteed (210) Price Group 6

Refer to Notice 123, *Price List*, for the applicable retail, commercial base, or commercial plus price.
Weight Limit: 70 lbs.

Insurance (212.5)

Insured Amount not over	Fee	Insured Amount not over	Fee
$100	No Fee	For document reconstruction insurance or non-document insurance coverage above $800, add $1.00 per $100 or fraction thereof, up to a maximum of $2,499 per shipment.	
200	$1.00		
300	2.00		
400	3.00		
500	4.00		
600	5.00		
700	6.00		
800	7.00	$2,499 max.	$24.00

Value Limit (212.1)

The maximum value of a GXG shipment to this country is $2,499 or a lesser amount if limited by content or value.

Size Limits (211.22)

The surface area of the address side of the item to be mailed must be large enough to completely contain the Global Express Guaranteed Air Waybill/Shipping Invoice (shipping label), postage, endorsement, and any applicable markings. The shipping label is approximately 5.5 inches high and 9.5 inches long.
Maximum length: 46 inches
Maximum width: 35 inches
Maximum height: 46 inches
Maximum length and girth combined: 108 inches

General Conditions for Mailing

See Publication 141, *Global Express Guaranteed Service Guide,* for information about areas served in the destination country, allowable contents, packaging and labeling requirements, tracking and tracing, service standards, and other conditions for mailing.

Express Mail International (220) Price Group 6

Refer to Notice 123, *Price List*, for the applicable retail, commercial base, or commercial plus price.
Weight Limit: 66 lbs.

Express Mail International — Flat Rate Envelope and Flat Rate Boxes

The maximum weight for the Express Mail International Flat Rate Envelope and the Express Mail International Flat Rate Boxes is 20 pounds. Refer to Notice 123, *Price List*, for the applicable retail, commercial base, or commercial plus price.

Insurance (222.8)

Available for **Express Mail International merchandise shipments** only

Insured Amount not over	**Fee**	**Insured Amount** not over	**Fee**
$100	No Fee	For insurance coverage above $2,000, add $1.50 for each $500 or fraction thereof, up to a maximum of $5,000 per shipment.	
200	$0.85		
500	2.35		
1,000	3.85		
1,500	5.35		
2,000	6.85	$5,000 max.	$15.85

Articles Admitted	Required Customs Form/Endorsement
Correspondence and business papers.	PS Form 2976, *Customs — CN 22 and Sender's Declaration.* Endorse item clearly next to mailing label as BUSINESS PAPERS.
Merchandise samples without commercial value and not subject to customs duty.	PS Form 2976, *Customs — CN 22 and Sender's Declaration.*
Merchandise and all articles subject to customs duty.	PS Form 2976-A, *Customs Declaration and Dispatch Note CP 72,* inside a PS Form 2976-E, *Customs Declaration Envelope CP 91.* Include a commercial invoice in each item.

Size Limits (221.52)

Maximum length: 36 inches
Maximum length and girth combined: 79 inches

Note:

Coins; banknotes; currency notes, including paper money; securities of any kind payable to bearer; traveler's checks; platinum, gold, and silver; precious stones; jewelry; watches; and other valuable articles are prohibited in Express Mail International shipments to Vietnam. All items prohibited in regular international mail are also prohibited in Express Mail International to Vietnam.

Reciprocal Service Name: EMS

Country Code: VN

Areas Served:

Bentre Town	Hochiminh City	Tanan Town
Bienhoa Town	Hongai Town	Tayninh Town
Cantho City	Hue Town	Thaibinh Town
Caolanh Town	Longxuyen Town	Thanh Hoa City
Danang City	Mytho City	Thudaumot Town
Hadong Town	Namdinh Town	Travinh Town
Haiduong Town	Nhatrang City	Vinh City
Haiphong City	Phanrang Town	Vinhlong Town
Hanoi City	Soctrang Town	Vungtau City

Priority Mail International (230) Price Group 6

Refer to Notice 123, *Price List*, for the applicable retail, commercial base, or commercial plus price.
Weight Limit: 70 lbs.

Note: *Ordinary Priority Mail International includes indemnity at no cost based on weight. (See 230.)*

Priority Mail International — Flat Rate

Flat Rate Envelopes or Small Flat Rate Priced Boxes: The maximum weight is 4 pounds. Refer to Notice 123, *Price List*, for the applicable retail, commercial base, or commercial plus price.

Flat Rate Boxes — Medium and Large: The maximum weight is 20 pounds, or the limit set by the individual country, whichever is less. Refer to Notice 123, *Price List*, for the retail, commercial base, or commercial plus price.

Insurance (232.92) NOT Available

Size Limits (231.22)

Maximum length: 42 inches
Maximum length and girth combined: 79 inches

First-Class Mail International (240) Price Group 6

For the prices and maximum weights for letters, large envelopes (flats), packages (small packets), and postcards, see Notice 123, *Price List*.

Size Limits

Letters: See 241.212
Postcards: See 241.221
Large Envelopes (Flats): See 241.232
Packages (Small Packets): See 241.242 and 241.243

Airmail M-bags (260) — Direct Sack to One Addressee Price Group 6

Refer to Notice 123, *Price List*, for the applicable retail, commercial base, or commercial plus price.
Weight Limit: 66 lbs.

Matter for the Blind (270)

Free when sent as First-Class Mail International, including Priority Mail International Flat Rate Envelopes and Small Flat Rate Priced Boxes. Weight limit: 4 pounds.
Free when sent as Priority Mail International. Weight limit: 15 pounds.

Extra Services

Certificate of Mailing (313)

Individual Pieces	Fee
Individual article (PS Form 3817)	$1.15
Firm mailing books (PS Form 3877), per article listed (minimum 3)	0.44
Duplicate copy of PS Form 3817 or PS Form 3877 (per page)	1.15
Bulk Quantities	**Fee**
First 1,000 pieces (or fraction thereof)	$6.70
Each additional 1,000 pieces (or fraction thereof)	0.80
Duplicate copy of PS Form 3606	1.15

COD and Certified

NOT for International Mail

International Business Reply Service (382)

Fee: Envelopes up to 2 ounces $1.50; Cards $1.00

International Postal Money Order (371)

NOT Available

International Reply Coupons (381)

Fee: $2.20

Registered Mail (330)

Fee: $11.75

Maximum Indemnity: $47.33
Available for First-Class Mail International, including postcards and Flat Rate Envelopes and Small Flat Rate Priced Boxes, and matter for the blind or other physically handicapped persons. Not applicable to M-bags.

Restricted Delivery (350)

Fee: $4.55

Available for registered mail with a return receipt.
Endorsements: A remettre en main propre.

Return Receipt (340)

Fee: $2.35

Available for registered mail only.

Wallis and Futuna Islands

Country Conditions for Mailing

Prohibitions (130)
Perishable infectious biological substances.
Radioactive materials.
Tobacco leaves or manufactured tobacco.
Weights and measures not of the decimal system.

Restrictions
Restrictions apply to the importation of flowers, fruit plants, products of animal origin, records, and sound recordings.

Observations
1. Import permits and import certificates are required for some types of goods. Therefore, senders should ascertain before mailing whether the necessary documents are held.
2. Import permits are not required for items valued less than 5,000 CFP francs per item.

Customs Forms Required (123)
First-Class Mail International items and Priority Mail International Flat Rate Envelopes and Small Flat Rate Priced Boxes:
PS Form 2976 (see 123.61)
Priority Mail International parcels:
PS Form 2976-A inside 2976-E (envelope)

Global Express Guaranteed (210) Price Group 4

Refer to Notice 123, *Price List*, for the applicable retail, commercial base, or commercial plus price.
Weight Limit: 70 lbs.

Insurance (212.5)

Insured Amount not over	Fee	Insured Amount not over	Fee
$100	No Fee	For document reconstruction insurance or non-document insurance coverage above $800, add $1.00 per $100 or fraction thereof, up to a maximum of $2,499 per shipment.	
200	$1.00		
300	2.00		
400	3.00		
500	4.00		
600	5.00		
700	6.00		
800	7.00	$2,499 max.	$24.00

Value Limit (212.1)
The maximum value of a GXG shipment to this country is $2,499 or a lesser amount if limited by content or value.

Size Limits (211.22)
The surface area of the address side of the item to be mailed must be large enough to completely contain the Global Express Guaranteed Air Waybill/Shipping Invoice (shipping label), postage, endorsement, and any applicable markings. The shipping label is approximately 5.5 inches high and 9.5 inches long.
Maximum length: 46 inches
Maximum width: 35 inches
Maximum height: 46 inches
Maximum length and girth combined: 108 inches

General Conditions for Mailing
See Publication 141, *Global Express Guaranteed Service Guide,* for information about areas served in the destination country, allowable contents, packaging and labeling requirements, tracking and tracing, service standards, and other conditions for mailing.

Express Mail International (220)
Not Available

Priority Mail International (230) Price Group 6

Refer to Notice 123, *Price List*, for the applicable retail, commercial base, or commercial plus price.
Weight Limit: 66 lbs.

Note: *Ordinary Priority Mail International includes indemnity at no cost based on weight. (See 230.)*

Priority Mail International — Flat Rate
Flat Rate Envelopes or Small Flat Rate Priced Boxes: The maximum weight is 4 pounds. Refer to Notice 123, *Price List*, for the applicable retail, commercial base, or commercial plus price.

Flat Rate Boxes — Medium and Large: The maximum weight is 20 pounds, or the limit set by the individual country, whichever is less. Refer to Notice 123, *Price List*, for the retail, commercial base, or commercial plus price.

Insurance (232.92)
Available for **Priority Mail International merchandise parcels** only (see 323.72 for markings)

Insured Amount not over	Fee	Insured Amount not over	Fee
$50	$2.45	Add $1.15 for each additional $100 or fraction of insurance coverage.	
100	3.60		
200	4.75		
300	5.90		
400	7.05		
500	8.20	$1,615 max.	$22.00

Size Limits (231.22)
Maximum length: 42 inches
Maximum length and girth combined: 79 inches

First-Class Mail International (240) Price Group 6
For the prices and maximum weights for letters, large envelopes (flats), packages (small packets), and postcards, see Notice 123, *Price List*.

Size Limits
Letters: See 241.212
Postcards: See 241.221
Large Envelopes (Flats): See 241.232
Packages (Small Packets): See 241.242 and 241.243

Airmail M-bags (260) — Direct Sack to One Addressee Price Group 6

Refer to Notice 123, *Price List*, for the applicable retail, commercial base, or commercial plus price.
Weight Limit: 66 lbs.

Matter for the Blind (270)
Free when sent as First-Class Mail International, including Priority Mail International Flat Rate Envelopes and Small Flat Rate Priced Boxes. Weight limit: 4 pounds.
Free when sent as Priority Mail International. Weight limit: 15 pounds.

Extra Services

Certificate of Mailing (313)

Individual Pieces	Fee
Individual article (PS Form 3817)	$1.15
Firm mailing books (PS Form 3877), per article listed (minimum 3)	0.44
Duplicate copy of PS Form 3817 or PS Form 3877 (per page)	1.15
Bulk Quantities	**Fee**
First 1,000 pieces (or fraction thereof)	$6.70
Each additional 1,000 pieces (or fraction thereof)	0.80
Duplicate copy of PS Form 3606	1.15

COD and Certified

NOT for International Mail

International Business Reply Service (382)

Fee: Envelopes up to 2 ounces $1.50; Cards $1.00

International Postal Money Order (371)

NOT Available

International Reply Coupons (381)

Fee: $2.20

Registered Mail (330)

Fee: $11.75

Maximum Indemnity: $47.33
Available for First-Class Mail International, including postcards and Flat Rate Envelopes and Small Flat Rate Priced Boxes, and matter for the blind or other physically handicapped persons. Not applicable to M-bags.

Restricted Delivery (350)

Fee: $4.55

Available for registered mail with a return receipt.
Endorsements: A remettre en main propre.

Return Receipt (340)

Fee: $2.35

Available for registered mail and insured Priority Mail International parcels only.

Western Samoa

Country Conditions for Mailing

Prohibitions (130)
Same as for New Zealand.

Restrictions
No list furnished.

Observations
None

Customs Forms Required (123)
First-Class Mail International items and Priority Mail International Flat Rate Envelopes and Small Flat Rate Priced Boxes:
PS Form 2976 (see 123.61)
Priority Mail International parcels:
PS Form 2976-A inside 2976-E (envelope)

Global Express Guaranteed (210)

Not Available

Express Mail International (220) Price Group 6

Refer to Notice 123, *Price List*, for the applicable retail, commercial base, or commercial plus price.
Weight Limit: 44 lbs.

Express Mail International — Flat Rate Envelope and Flat Rate Boxes

The maximum weight for the Express Mail International Flat Rate Envelope and the Express Mail International Flat Rate Boxes is 20 pounds. Refer to Notice 123, *Price List*, for the applicable retail, commercial base, or commercial plus price.

Insurance (222.8)
Note: Express Mail International merchandise insurance is not available to this country. Document reconstruction insurance coverage is provided, at no additional cost, to a maximum of $100 per shipment. See 222.72.

Articles Admitted	Required Customs Form/Endorsement
Correspondence and business papers.	PS Form 2976, *Customs — CN 22 and Sender's Declaration.* Endorse item clearly next to mailing label as BUSINESS PAPERS.
Merchandise samples without commercial value.	PS Form 2976, *Customs — CN 22 and Sender's Declaration.*

Size Limits (221.52)
Maximum length: 36 inches
Maximum length and girth combined: 79 inches

Notes:
1. Merchandise and all articles subject to customs duty are prohibited in Express Mail International shipments.
2. Coins; banknotes; currency notes, including paper money; securities of any kind payable to bearer; traveler's checks; platinum, gold, and silver; precious stones; jewelry; watches; and other valuable articles are prohibited in Express Mail International shipments to Western Samoa.

Reciprocal Service Name: Express Post International

Country Code: WS

Areas Served: Apia City

Priority Mail International (230) Price Group 6

Refer to Notice 123, *Price List*, for the applicable retail, commercial base, or commercial plus price.
Weight Limit: 44 lbs.

Note: *Ordinary Priority Mail International includes indemnity at no cost based on weight. (See 230.)*

Priority Mail International — Flat Rate
Flat Rate Envelopes or Small Flat Rate Priced Boxes: The maximum weight is 4 pounds. Refer to Notice 123, *Price List*, for the applicable retail, commercial base, or commercial plus price.

Flat Rate Boxes — Medium and Large: The maximum weight is 20 pounds, or the limit set by the individual country, whichever is less. Refer to Notice 123, *Price List*, for the retail, commercial base, or commercial plus price.

Insurance (232.92)
Available for **Priority Mail International merchandise parcels** only (see 323.72 for markings)

Insured Amount not over	Fee
$50	$2.45
100	3.60
200	4.75
295 max.	5.90

Size Limits (231.22)
Maximum length: 42 inches
Maximum length and girth combined: 79 inches

First-Class Mail International (240) Price Group 6
For the prices and maximum weights for letters, large envelopes (flats), packages (small packets), and postcards, see Notice 123, *Price List*.

Size Limits
Letters: See 241.212
Postcards: See 241.221
Large Envelopes (Flats): See 241.232
Packages (Small Packets): See 241.242 and 241.243

Airmail M-bags (260) — Direct Sack to One Addressee Price Group 6

Refer to Notice 123, *Price List*, for the applicable retail, commercial base, or commercial plus price.
Weight Limit: 66 lbs.

Matter for the Blind (270)
Free when sent as First-Class Mail International, including Priority Mail International Flat Rate Envelopes and Small Flat Rate Priced Boxes. Weight limit: 4 pounds.
Free when sent as Priority Mail International. Weight limit: 15 pounds.

Extra Services

Certificate of Mailing (313)

Individual Pieces	Fee
Individual article (PS Form 3817)	$1.15
Firm mailing books (PS Form 3877), per article listed (minimum 3)	0.44
Duplicate copy of PS Form 3817 or PS Form 3877 (per page)	1.15
Bulk Quantities	**Fee**
First 1,000 pieces (or fraction thereof)	$6.70
Each additional 1,000 pieces (or fraction thereof)	0.80
Duplicate copy of PS Form 3606	1.15

COD and Certified

NOT for International Mail

International Business Reply Service (382)

Fee: Envelopes up to 2 ounces $1.50; Cards $1.00

International Postal Money Order (371)

NOT Available

International Reply Coupons (381)

Fee: $2.20

Registered Mail (330)

Fee: $11.75

Maximum Indemnity: $47.33
Available for First-Class Mail International, including postcards and Flat Rate Envelopes and Small Flat Rate Priced Boxes, and matter for the blind or other physically handicapped persons. Not applicable to M-bags.

Restricted Delivery (350)

NOT Available

Return Receipt (340)

Fee: $2.35

Available for registered mail and insured Priority Mail International parcels only.

Yemen

Country Conditions for Mailing

Prohibitions (130)
Circulars concerning lotteries.
Coin or bullion exceeding L5 in value.
Firing caps and loaded metal catridges for portable firearms, non-explosive parts of artillery fuses.
Perishable infectious biological substances.
Perishable noninfectious biological substances.
Radioactive materials.

Restrictions
Arms and military supplies may only be imported by or on behalf of the Government of Aden.
Coins; banknotes; currency notes; securities payable to bearer; and traveler's checks may only be sent in registered First-Class Mail International shipments.
Gift shipments containing items for personal use are restricted to one shipment per month per addressee, on condition that the value of the contents does not exceed $85.

Observations
Mail may be addressed by the short form of the country name Yemen (Aden).

Customs Forms Required (123)
First-Class Mail International items and Priority Mail International Flat Rate Envelopes and Small Flat Rate Priced Boxes:
PS Form 2976 (see 123.61)
Priority Mail International parcels:
PS Form 2976-A inside 2976-E (envelope)

Global Express Guaranteed (210) Price Group 6

Refer to Notice 123, *Price List*, for the applicable retail, commercial base, or commercial plus price.
Weight Limit: 70 lbs.

Insurance (212.5)

Insured Amount not over	Fee	Insured Amount not over	Fee
$100	No Fee	For document reconstruction insurance or non-document insurance coverage above $800, add $1.00 per $100 or fraction thereof, up to a maximum of $2,499 per shipment.	
200	$1.00		
300	2.00		
400	3.00		
500	4.00		
600	5.00		
700	6.00		
800	7.00	$2,499 max.	$24.00

Value Limit (212.1)
The maximum value of a GXG shipment to this country is $2,499 or a lesser amount if limited by content or value.

Size Limits (211.22)
The surface area of the address side of the item to be mailed must be large enough to completely contain the Global Express Guaranteed Air Waybill/Shipping Invoice (shipping label), postage, endorsement, and any applicable markings. The shipping label is approximately 5.5 inches high and 9.5 inches long.
Maximum length: 46 inches
Maximum width: 35 inches
Maximum height: 46 inches
Maximum length and girth combined: 108 inches

General Conditions for Mailing
See Publication 141, *Global Express Guaranteed Service Guide,* for information about areas served in the destination country, allowable contents, packaging and labeling requirements, tracking and tracing, service standards, and other conditions for mailing.

Express Mail International (220) Price Group 8

Refer to Notice 123, *Price List*, for the applicable retail, commercial base, or commercial plus price.
Weight Limit: 66 lbs.

Express Mail International — Flat Rate Envelope and Flat Rate Boxes
The maximum weight for the Express Mail International Flat Rate Envelope and the Express Mail International Flat Rate Boxes is 20 pounds. Refer to Notice 123, *Price List*, for the applicable retail, commercial base, or commercial plus price.

Insurance (222.8)
Available for **Express Mail International merchandise shipments** only

Insured Amount not over	Fee	Insured Amount not over	Fee
$100	No Fee	For insurance coverage above $2,000, add $1.50 for each $500 or fraction thereof, up to a maximum of $5,000 per shipment.	
200	$0.85		
500	2.35		
1,000	3.85		
1,500	5.35		
2,000	6.85	$5,000 max.	$15.85

Articles Admitted	Required Customs Form/Endorsement
Correspondence and business papers.	PS Form 2976, *Customs — CN 22 and Sender's Declaration.* Endorse item clearly next to mailing label as BUSINESS PAPERS.
Merchandise samples without commercial value.	PS Form 2976, *Customs — CN 22 and Sender's Declaration.*
Merchandise and all articles subject to customs duty.	PS Form 2976-A, *Customs Declaration and Dispatch Note CP 72,* inside a PS Form 2976-E, *Customs Declaration Envelope CP 91.*

Size Limits (221.52)
Maximum length: 36 inches
Maximum length and girth combined: 79 inches

Notes:
1. A commercial invoice must be included with all commercial shipments.
2. Coins; banknotes; currency notes, including paper money; securities of any kind payable to bearer; traveler's checks; platinum, gold, and silver; precious stones; jewelry; watches; and other valuable articles are prohibited in Express Mail International shipments to Yemen.

Reciprocal Service Name: EMS

Country Code: YE

Areas Served: All

Priority Mail International (230) Price Group 8

Refer to Notice 123, *Price List*, for the applicable retail, commercial base, or commercial plus price.
Weight Limit: 66 lbs.

Note: *Ordinary Priority Mail International includes indemnity at no cost based on weight. (See 230.)*

Priority Mail International — Flat Rate

Flat Rate Envelopes or Small Flat Rate Priced Boxes: The maximum weight is 4 pounds. Refer to Notice 123, *Price List*, for the applicable retail, commercial base, or commercial plus price.

Flat Rate Boxes — Medium and Large: The maximum weight is 20 pounds, or the limit set by the individual country, whichever is less. Refer to Notice 123, *Price List*, for the retail, commercial base, or commercial plus price.

Insurance (232.92)

Available for **Priority Mail International merchandise parcels** only (see 323.72 for markings)

Insured Amount not over	**Fee**	**Insured Amount** not over	**Fee**
$50	$2.45	Add $1.15 for each additional $100 or fraction of insurance coverage.	
100	3.60		
200	4.75		
300	5.90		
400	7.05		
500	8.20	$820 max.	$12.80

Size Limits (231.22)

Maximum length: 42 inches
Maximum length and girth combined: 79 inches

First-Class Mail International (240) Price Group 8

For the prices and maximum weights for letters, large envelopes (flats), packages (small packets), and postcards, see Notice 123, *Price List*.

Size Limits

Letters: See 241.212
Postcards: See 241.221
Large Envelopes (Flats): See 241.232
Packages (Small Packets): See 241.242 and 241.243

Airmail M-bags (260) — Direct Sack to One Addressee Price Group 8

Refer to Notice 123, *Price List*, for the applicable retail, commercial base, or commercial plus price.
Weight Limit: 66 lbs.

Matter for the Blind (270)

Free when sent as First-Class Mail International, including Priority Mail International Flat Rate Envelopes and Small Flat Rate Priced Boxes. Weight limit: 4 pounds.
Free when sent as Priority Mail International. Weight limit: 15 pounds.

Extra Services

Certificate of Mailing (313)

Individual Pieces	**Fee**
Individual article (PS Form 3817)	$1.15
Firm mailing books (PS Form 3877), per article listed (minimum 3)	0.44
Duplicate copy of PS Form 3817 or PS Form 3877 (per page)	1.15
Bulk Quantities	**Fee**
First 1,000 pieces (or fraction thereof)	$6.70
Each additional 1,000 pieces (or fraction thereof)	0.80
Duplicate copy of PS Form 3606	1.15

COD and Certified

NOT for International Mail

International Business Reply Service (382)

Fee: Envelopes up to 2 ounces $1.50; Cards $1.00

International Postal Money Order (371)

NOT Available

International Reply Coupons (381) **Fee:** $2.20

Registered Mail (330) **Fee:** $11.75

Maximum Indemnity: $47.33
Available for First-Class Mail International, including postcards and Flat Rate Envelopes and Small Flat Rate Priced Boxes, and matter for the blind or other physically handicapped persons. Not applicable to M-bags.

Restricted Delivery (350) **Fee:** $4.55

Available for registered mail with a return receipt.
Endorsements: A remettre en main propre.

Return Receipt (340) **Fee:** $2.35

Available for registered mail and insured Priority Mail International parcels only.

Zambia

Country Conditions for Mailing

Prohibitions (130)
Lottery tickets or circulars relating to lotteries.
Prison-made goods.
Radioactive materials.

Restrictions
Coins; paper currency; banknotes; currency notes; securities payable to the bearer; jewelry; manufactured and unmanufactured platinum, gold, and silver; precious stones; and other valuable articles are admitted only if sent in registered First-Class Mail International shipments.

The following articles are limited to quantities valued at 25 pounds sterling or less, whether sent in single shipments or in commercial consignments of multiple shipments: Cigars, cigarettes, manufactured or unmanufactured tobacco; blankets; quilts, mattresses, pillows and cushions; carpets, rugs, and mats; clothing; gloves; hats, caps and other headwear; footwear, stockings and socks; piece goods and lace; perfumes and cosmetics; cutlery; books; playing cards; watches; jewelry, articles of gold or silver; sporting and athletic goods; cups, medals, trophies, etc.; and harness and saddlery.

Medicines must be clearly marked as to their nature or composition in English on the label.

Observations
None

Customs Forms Required (123)
First-Class Mail International items and Priority Mail International Flat Rate Envelopes and Small Flat Rate Priced Boxes:
PS Form 2976 (see 123.61)

Priority Mail International parcels:
PS Form 2976-A inside 2976-E (envelope)

Global Express Guaranteed (210) Price Group 4

Refer to Notice 123, *Price List*, for the applicable retail, commercial base, or commercial plus price.
Weight Limit: 70 lbs.

Insurance (212.5)

Insured Amount not over	Fee	Insured Amount not over	Fee
$100	No Fee	For document reconstruction insurance or non-document insurance coverage above $800, add $1.00 per $100 or fraction thereof, up to a maximum of $2,499 per shipment.	
200	$1.00		
300	2.00		
400	3.00		
500	4.00		
600	5.00		
700	6.00		
800	7.00	$2,499 max.	$24.00

Value Limit (212.1)
The maximum value of a GXG shipment to this country is $2,499 or a lesser amount if limited by content or value.

Size Limits (211.22)
The surface area of the address side of the item to be mailed must be large enough to completely contain the Global Express Guaranteed Air Waybill/Shipping Invoice (shipping label), postage, endorsement, and any applicable markings. The shipping label is approximately 5.5 inches high and 9.5 inches long.

Maximum length: 46 inches
Maximum width: 35 inches
Maximum height: 46 inches
Maximum length and girth combined: 108 inches

General Conditions for Mailing
See Publication 141, *Global Express Guaranteed Service Guide,* for information about areas served in the destination country, allowable contents, packaging and labeling requirements, tracking and tracing, service standards, and other conditions for mailing.

Express Mail International (220) Price Group 7

Refer to Notice 123, *Price List*, for the applicable retail, commercial base, or commercial plus price.
Weight Limit: 66 lbs.

Express Mail International — Flat Rate Envelope and Flat Rate Boxes

The maximum weight for the Express Mail International Flat Rate Envelope and the Express Mail International Flat Rate Boxes is 20 pounds. Refer to Notice 123, *Price List*, for the applicable retail, commercial base, or commercial plus price.

Insurance (222.8)
Available for **Express Mail International merchandise shipments** only

Insured Amount not over	Fee	Insured Amount not over	Fee
$100	No Fee	For insurance coverage above $2,000, add $1.50 for each $500 or fraction thereof, up to a maximum of $5,000 per shipment.	
200	$0.85		
500	2.35		
1,000	3.85		
1,500	5.35		
2,000	6.85	$5,000 max.	$15.85

Articles Admitted	Required Customs Form/Endorsement
Correspondence, business papers, and documents.	PS Form 2976, *Customs — CN 22 and Sender's Declaration.* Endorse item clearly next to mailing label as BUSINESS PAPERS.
Merchandise samples without commercial value.	PS Form 2976, *Customs — CN 22 and Sender's Declaration.*
Merchandise and all articles subject to customs duty.	PS Form 2976-A, *Customs Declaration and Dispatch Note CP 72,* inside a PS Form 2976-E, *Customs Declaration Envelope CP 91*.

Size Limits (221.52)
Maximum length: 36 inches
Maximum length and girth combined: 79 inches

Note:
Coins; banknotes; currency notes, including paper money; securities of any kind payable to bearer; traveler's checks; platinum, gold, and silver; precious stones; jewelry; watches; and other valuable articles are prohibited in Express Mail International shipments to Zambia.

Reciprocal Service Name: Datapost

Country Code: ZM

Areas Served:

Broadway	Kansenshi	Mpika
Chachacha	Kapiri	Mposhi
Chawama	Kasama	Mufulira
Chililabombwe	Katete	Mumbwa
Chimwemwe	Kitwe	Nakonde
Chingola	Livingstone	Ndola
Chinsali	Luanshya	Parklands
Chipata	Lumumba	Petauke
Choma	Lusaka	President
Hospital	Mansa	Ridgeway
Isoka	Martindale	Serenje
Kabwe	Mazabuka	Skyways
Kafue	Mkushi	Solwezi
Kalomo	Mongu	University
Kalulushi	Monze	

Priority Mail International (230) Price Group 7

Refer to Notice 123, *Price List*, for the applicable retail, commercial base, or commercial plus price.
Weight Limit: 66 lbs.

Note: *Ordinary Priority Mail International includes indemnity at no cost based on weight. (See 230.)*

Priority Mail International — Flat Rate
Flat Rate Envelopes or Small Flat Rate Priced Boxes: The maximum weight is 4 pounds. Refer to Notice 123, *Price List*, for the applicable retail, commercial base, or commercial plus price.

Flat Rate Boxes — Medium and Large: The maximum weight is 20 pounds, or the limit set by the individual country, whichever is less. Refer to Notice 123, *Price List*, for the retail, commercial base, or commercial plus price.

Insurance (232.92) NOT Available

Size Limits (231.22)
Maximum length: 42 inches
Maximum length and girth combined: 79 inches

First-Class Mail International (240) Price Group 7
For the prices and maximum weights for letters, large envelopes (flats), packages (small packets), and postcards, see Notice 123, *Price List*.

Size Limits
Letters: See 241.212
Postcards: See 241.221
Large Envelopes (Flats): See 241.232
Packages (Small Packets): See 241.242 and 241.243

Airmail M-bags (260) — Direct Sack to One Addressee Price Group 7

Refer to Notice 123, *Price List*, for the applicable retail, commercial base, or commercial plus price.
Weight Limit: 66 lbs.

Matter for the Blind (270)
Free when sent as First-Class Mail International, including Priority Mail International Flat Rate Envelopes and Small Flat Rate Priced Boxes. Weight limit: 4 pounds.
Free when sent as Priority Mail International. Weight limit: 15 pounds.

Extra Services

Certificate of Mailing (313)

Individual Pieces	Fee
Individual article (PS Form 3817)	$1.15
Firm mailing books (PS Form 3877), per article listed (minimum 3)	0.44
Duplicate copy of PS Form 3817 or PS Form 3877 (per page)	1.15
Bulk Quantities	**Fee**
First 1,000 pieces (or fraction thereof)	$6.70
Each additional 1,000 pieces (or fraction thereof)	0.80
Duplicate copy of PS Form 3606	1.15

COD and Certified **NOT** for International Mail

International Business Reply Service (382)
Fee: Envelopes up to 2 ounces $1.50; Cards $1.00

International Postal Money Order (371)
NOT Available

International Reply Coupons (381) **Fee:** $2.20

Registered Mail (330) **Fee:** $11.75
Maximum Indemnity: $47.33
Available for First-Class Mail International, including postcards and Flat Rate Envelopes and Small Flat Rate Priced Boxes, and matter for the blind or other physically handicapped persons. Not applicable to M-bags.

Restricted Delivery (350) **Fee:** $4.55
Available for registered mail with a return receipt.
Endorsements: A remettre en main propre.

Return Receipt (340) **Fee:** $2.35
Available for registered mail only.

Zimbabwe

Country Conditions for Mailing

Prohibitions (130)
Articles made in prisons.
Coins; bank notes; currency notes (paper money); securities of any kind payable to bearer; traveler's checks; platinum, gold, and silver (manufactured or not); precious stones; jewelry; and other valuable articles are prohibited in all classes of mail, including Express Mail International shipments, that are mailed to Zimbabwe.
Firearms except under permit.
Honey.
Lottery tickets or circulars relating to lotteries.
Perishable infectious biological substances.

Restrictions
Medicines must be labeled with the name, formula, and composition in English.

Observations
None

Customs Forms Required (123)
First-Class Mail International items and Priority Mail International Flat Rate Envelopes and Small Flat Rate Priced Boxes:
PS Form 2976 (see 123.61)
Priority Mail International parcels:
PS Form 2976-A inside 2976-E (envelope)

Global Express Guaranteed (210) Price Group 4

Refer to Notice 123, *Price List*, for the applicable retail, commercial base, or commercial plus price.
Weight Limit: 70 lbs.

Insurance (212.5)

Insured Amount not over	Fee	Insured Amount not over	Fee
$100	No Fee	For document reconstruction insurance or non-document insurance coverage above $800, add $1.00 per $100 or fraction thereof, up to a maximum of $2,499 per shipment.	
200	$1.00		
300	2.00		
400	3.00		
500	4.00		
600	5.00		
700	6.00		
800	7.00	$2,499 max.	$24.00

Value Limit (212.1)
The maximum value of a GXG shipment to this country is $2,499 or a lesser amount if limited by content or value.

Size Limits (211.22)
The surface area of the address side of the item to be mailed must be large enough to completely contain the Global Express Guaranteed Air Waybill/Shipping Invoice (shipping label), postage, endorsement, and any applicable markings. The shipping label is approximately 5.5 inches high and 9.5 inches long.
Maximum length: 46 inches
Maximum width: 35 inches
Maximum height: 46 inches
Maximum length and girth combined: 108 inches

General Conditions for Mailing
See Publication 141, *Global Express Guaranteed Service Guide,* for information about areas served in the destination country, allowable contents, packaging and labeling requirements, tracking and tracing, service standards, and other conditions for mailing.

Express Mail International (220) Price Group 7

Refer to Notice 123, *Price List*, for the applicable retail, commercial base, or commercial plus price.
Weight Limit: 44 lbs.

Express Mail International — Flat Rate Envelope and Flat Rate Boxes
The maximum weight for the Express Mail International Flat Rate Envelope and the Express Mail International Flat Rate Boxes is 20 pounds. Refer to Notice 123, *Price List*, for the applicable retail, commercial base, or commercial plus price.

Insurance (222.8)
Available for **Express Mail International merchandise shipments** only

Insured Amount not over	Fee	Insured Amount not over	Fee
$100	No Fee	For insurance coverage above $2,000, add $1.50 for each $500 or fraction thereof, up to a maximum of $5,000 per shipment.	
200	$0.85		
500	2.35		
1,000	3.85		
1,500	5.35		
2,000	6.85	$5,000 max.	$15.85

Articles Admitted	Required Customs Form/Endorsement
Correspondence, business papers, and documents.	PS Form 2976, *Customs — CN 22 and Sender's Declaration.* Endorse item clearly next to mailing label as BUSINESS PAPERS.
Merchandise samples without commercial value.	PS Form 2976, *Customs — CN 22 and Sender's Declaration.*
Merchandise and all articles subject to customs duty.	PS Form 2976-A, *Customs Declaration and Dispatch Note CP 72,* inside a PS Form 2976-E, *Customs Declaration Envelope CP 91.*

Size Limits (221.52)
Maximum length: 36 inches
Maximum length and girth combined: 79 inches

Note:
Coins; banknotes; currency notes, including paper money; securities of any kind payable to bearer; traveler's checks; platinum, gold, and silver; precious stones; jewelry; watches; and other valuable articles are prohibited in Express Mail International shipments to Zimbabwe.

Reciprocal Service Name: EMS Zimbabwe or Expedited Mail Service-Zimbabwe

Country Code: ZW

Areas Served:

Amby	Gokwe	Mpopoma
Ascot	Gwanda	Mutare
Avondale	Gweru	Mvulwi
Banket	Harare	Nkulumane
Beilbridge	Harare Airport	North End
Belmont	Highfield	Norton
Bindura	Highlands	Nyanga
Borrowdale	Hillside	Plumtree
Bulawayo	Hwange	Raylton
Causeway	Kadoma	Redcliff
Chegulu	Kariba	Rusape
Chimanimani	Karol	Seke
Chinhoyi	Kopje	Southerton
Chipinge	Kwekwe	Triangle
Chiredzi	Marondera	Victoria Falls
Chisipiti	Masvingo	Waterfalls
Chivhu	Morningside	Zvishavane
Famona	Mount Pleasant	

Priority Mail International (230) Price Group 7

Refer to Notice 123, *Price List*, for the applicable retail, commercial base, or commercial plus price.
Weight Limit: 44 lbs.

Note: *Ordinary Priority Mail International includes indemnity at no cost based on weight. (See 230.)*

Priority Mail International — Flat Rate
Flat Rate Envelopes or Small Flat Rate Priced Boxes: The maximum weight is 4 pounds. Refer to Notice 123, *Price List*, for the applicable retail, commercial base, or commercial plus price.

Flat Rate Boxes — Medium and Large: The maximum weight is 20 pounds, or the limit set by the individual country, whichever is less. Refer to Notice 123, *Price List*, for the retail, commercial base, or commercial plus price.

Insurance (232.92) NOT Available

Size Limits (231.22)
Maximum length: 42 inches
Maximum length and girth combined: 79 inches

First-Class Mail International (240) Price Group 7
For the prices and maximum weights for letters, large envelopes (flats), packages (small packets), and postcards, see Notice 123, *Price List*.

Size Limits
Letters: See 241.212
Postcards: See 241.221
Large Envelopes (Flats): See 241.232
Packages (Small Packets): See 241.242 and 241.243

Airmail M-bags (260) — Direct Sack to One Addressee Price Group 7

Refer to Notice 123, *Price List*, for the applicable retail, commercial base, or commercial plus price.
Weight Limit: 66 lbs.

Matter for the Blind (270)
Free when sent as First-Class Mail International, including Priority Mail International Flat Rate Envelopes and Small Flat Rate Priced Boxes. Weight limit: 4 pounds.
Free when sent as Priority Mail International. Weight limit: 15 pounds.

Extra Services

Certificate of Mailing (313)

Individual Pieces	Fee
Individual article (PS Form 3817)	$1.15
Firm mailing books (PS Form 3877), per article listed (minimum 3)	0.44
Duplicate copy of PS Form 3817 or PS Form 3877 (per page)	1.15
Bulk Quantities	**Fee**
First 1,000 pieces (or fraction thereof)	$6.70
Each additional 1,000 pieces (or fraction thereof)	0.80
Duplicate copy of PS Form 3606	1.15

COD and Certified **NOT** for International Mail

International Business Reply Service (382)
Fee: Envelopes up to 2 ounces $1.50; Cards $1.00

International Postal Money Order (371)
NOT Available

International Reply Coupons (381) **Fee:** $2.20

Registered Mail (330) **Fee:** $11.75
Maximum Indemnity: $47.33
Available for First-Class Mail International, including postcards and Flat Rate Envelopes and Small Flat Rate Priced Boxes, and matter for the blind or other physically handicapped persons. Not applicable to M-bags.

Restricted Delivery (350) NOT Available

Return Receipt (340) **Fee:** $2.35
Available for registered mail only.

List of Exhibits

Exhibit 123.61
Customs Declaration Form Usage by Mail Category 8

Exhibit 123.711
PS Form 2976, Customs Declaration CN 22 — Sender's Declaration
(Sender's Instructions and Copy 3) 13

Exhibit 123.721
PS Form 2976-A, Customs Declaration and Dispatch Note — CP 72
(Instructions, Copies 1 and 4, and Indemnity Statement) 17

Exhibit 152.44
Indicia Formats 35

Exhibit 213.5
Destinating Countries and Price Groups 44

Exhibit 215.1
Global Express Guaranteed: Participating 3-Digit ZIP Codes 53

Exhibit 222.4
Eligible Express Mail International Flat Rate Boxes 57

Exhibit 231.23
Measuring Parcel Dimensions 65

Exhibit 232.2a
Eligible Priority Mail International Flat Rate Envelopes 66

Exhibit 232.2b
Eligible Priority Mail International Small Flat Rate Priced Boxes 67

Exhibit 232.4a
Eligible Priority Mail International Medium Flat Rate Boxes 67

Exhibit 232.4b
Eligible Priority Mail International Large Flat Rate Boxes 68

Exhibit 232.83
Ordinary Priority Mail International Weight and Indemnity Limits 70

Exhibit 241.236a
Flexibility Test — All Large Envelopes (Flats) 81

Exhibit 241.236b
Flexibility Test — Large Envelopes (Flats) 10 Inches or Longer 82

Exhibit 241.236c
Flexibility Test — Large Envelopes (Flats) Less Than 10 Inches Long 83

Exhibit 243.13
First-Class Mail International Price Groups 85

Exhibit 292.452
IPA Country Price Groups and Foreign Office of Exchange Codes 104

Exhibit 292.461
Labeling of IPA Mail to Postal Service Exchange Offices (Full-service only) 110

Exhibit 292.47
Canadian Mail Container Labeling Information (Full-service Only) 112

Exhibit 292.532
IPA Drop Shipment Locations 114

Exhibit 293.452
ISAL Country Price Groups and Foreign Office of Exchange Codes 120

Exhibit 293.461
Labeling of ISAL Mail to Postal Service Exchange Offices (Full-service Only) 123

Exhibit 293.47
Canadian Mail Sack Labeling Information (Full-service Only) 125

Exhibit 293.532
ISAL Drop Shipment Locations 126

Exhibit 323.62
Conversion Table: U.S. Dollars to Special Drawing Right (SDR) 135

Exhibit 371.2
Countries Accepting the International Postal Money Order Form (MP1) 143

Exhibit 382.6
Format Requirements — US IBRS 152

Exhibit 382.7
Format Requirements — Foreign IBRS 153

Exhibit 553.121
Certificate of Mailing Dried Whole Eggs 173

Exhibit 582.22
Waiver of the Right to Withdraw the Package 175

Exhibit 711.62
U.S. Customs Service Locations. 186

Exhibit 921.2
Time Limits for Inquiries 218

Exhibit 922.2
Filing Claims 220

Forms Index

All forms are PS Forms unless otherwise noted.

Form ID	Title	References
673	Report of Rifled Parcel	921.53
1000	Domestic or International Claim	713.612; 922.2; 922.3; 922.4b; 922.41a,d; 931.1
2710	Statement of Net Weight of the Airmail	763.2
2856	Damage Report of Insured Parcel and Contents	921.53; 922.2; 922.41b
2861	Express Mail International Service Inquiry	922.31a(2)
2865	Return Receipt for International Mail	341; 753.1; 753.2
2932	Customs Collections Summary	713.46
2933	Register of Uncollected Customs Charges	713.521; 713.522; 713.523
2937	Importer's Objections	713.233d,e
2944	Receipt for Customs Duty Mail	713.221; 713.224a
2976	Customs Declaration CN 22 — Sender's Declaration	123.1; 123.3; 123.61; 123.71; 123.711; 123.712; 123.721; 232.6; 242.2; 261.22e; 264.3; 334.12b; 334.13a
2976-A	Customs Declaration and Dispatch Note — CP 72	123.1; 123.3; 123.61; 123.72; 123.721; 123.722; 123.73; 232.62; 232.63; 264.3; 323.52; 323.61; 323.62 (a),(f); 922.31a(3),(4)
2976-E	Customs Declaration Envelope — CP 91	123.1; 123.61; 123.721c; 123.73
2993	Returned or Redirected Parcel	771.6
3533	Application and Voucher for Refund of Postage, Fees, and Services	941.2a; 942.21d; 942.31a; 942.4
3533-GE	Application and Voucher for Refund of Postage and Fees — EMS With Guarantee Service	942.22c; 942.32a; 942.4; 943.1c.
3606	Certificate of Bulk Mailing	313.3
3700	Postage Statement — International Mail	152.41; 262.5b; 292.32; 293.32
3760	Parcel Search Request	921.541; 921.542
3806	Receipt for Registered Mail	123.711f; 334.11; 334.13a
3817	Certificate of Mailing	313.1
3831	Receipt for Article(s) Damaged in Mails	923b(2)
3849	Delivery Notice/ Reminder/Receipt	713.212; 713.223a,d; 713.224c; 713.312; 713.313
3877	Firm Mailing Book for Accountable Mail	313.2; 323.61; 334.11
6401	Money Order Inquiry	371.721; 371.722; 371.723
8125	Plant-Verified Drop Shipment (PVDS) Verification and Clearance	292.531; 293.531
Cmrc Form 7525-V	Shipper's Export Declaration (SED)	533.1
Customs Form 3311	Declaration for Free Entry of Returned American Products and/or Certificates of Exportation	713.44
Customs Form 3342	Declaration for Free Entry of Gifts and/or Authorization to Postmaster to Deliver Mail Importation Conditional Free of Duty	713.522
Customs Form 3413	Waiver of Sender's Right to Withdraw Package From the Mail	582.11b; 582.12; 582.22
Customs Form CBP 3419ALT	Mail Entry	711.52; 711.61; 712.12; 713.11; 713.221; 713.223a,c,d; 713.232; 713.233a,b,d(2),e; 713.311; 713.321; 713.331; 713.51; 713.521; 713.522; 713.53; 713.54; 713.611; 713.612c; 713.621; 713.622; 764.24; 772.2; 772.32c

Form ID	Title	References
Customs Form 4455	Certificate of Registration	314.12b; 713.431; 713.432b,c,d,e
Customs Form 6423	Notice of Damage, Shortage, or Samples Retained and Notice to Call for Samples	711.4
Customs Form 7511	Notice of Exportation of Articles with Benefit of Drawback	582.11a; 582.12; 582.21; 582.31; 582.32
Form MP1	International Postal Money Order	371.2; 371.3; 371.41; 371.42; 371.43; 371.53; 371.721
Intrntl Form CN 65	Bill. Weight of Airmail Items	763.2
Treasury Dept. (Int. Rev.) Form P.T. 26		314.12a
Treasury Dept. (Int. Rev.) Form P.T. 27-A		314.12a
Treasury Dept. (Int. Rev.) Form P.T. 550		314.12a
USFWS Form 3-177	Declaration for Importation or Exportation of Fish or Wildlife	592.1; 592.2

Index

A

Accepting employee's responsibility
- Certificate of mailing 314.22
- Forwarding ship passenger and crew mail 763.4
- Insured mail 323.62
- Registered Mail 334.13
- Return receipt 344.12

Accountable mail firm book 323.61

Address corrections
- Undeliverable mail, endorsements DMM 507

Addressee
- Format 122
- Illegible address 133; DMM 507
- Insufficient address 133; 431; DMM 507

Addressing 122

Advance payment required 783

Aerosol containers DMM 601

Agriculture inspection stations and offices 723

Animals 138.1
- Quarantine inspection 720

APO/FPO military mail DMM 703.2

Availability
- Certificate of mailing 312
- Insurance 321.2; 322.2; 323.2
- International Business Reply Service (IBRS) 382.2
- International Priority Airmail (IPA) 292.22
- International reply coupons 381.2
- International Surface Air Lift (ISAL) 293.22
- Money orders, international postal 371.2
- Registered Mail 332

B

Backstamping mail 764.3

Blind persons, mail for (see Matter for the blind)

Business reply mail, domestic 132.2
- International (see International Business Reply Service)

C

Canada
- Eggs, mailing 138.32
- Forwarding periodicals publications from 764.121
- Labeling mail bound for 292.47
- Money orders 371.52
- Shortpaid postage 423.21; 732

Card specifications (see also postcards)
- Borders 241.215
- Colors 241.222
- Dimensions 241.221
- Quality 241.223

Catalogs (see M-bags) 260

Categories, International Mail 140
- Express Mail International 141.3; 220
- First-Class Mail International 141.5; 240
- General 141.1
- Global Express Guaranteed 141.2; 210
- Matter for the blind 270
- Postcards 241.22
- Priority Mail International 141.4; 230

Certificate of Mailing 310
- Availability 312
- Bulk mailings 313.3
- Description 311
- Dried whole eggs 553.12
- Fees 313
- Forms 314.1
- Processing requests 314

Claims 922
- Indemnity (see Indemnity claims/payments)

Commodities and technical data 530

Complaints (see Inquiries)

Compressed gases 136

Consular and commercial invoices 570
Copyright violations DMM 608
Corrosive materials 136
Customer complaints (see Inquiries)
Customs information (U.S.) 710
  Addressee 713.222; 713.23
  Assessment of duty in foreign countries 713.45
  Audio-visual equipment 713.44
  Collection of fees 712.12
  Customs clearance and delivery fee 712
  Customs examination of mail 711
  Customs shipments in bad order 711.512
  Delivery of dutiable articles 713.2
  Detached customs mail entry 713.54
  Detection and dispatch of dutiable mail 713.1
  Directory of offices 711.62
  Dutiable articles 711; 713
  Duty, payment of 713.4
  Failure to receive customs treatment 711.6
  Fees for deliveries 712
  Forms (see Customs forms)
  Forwarding 713.3; 760
  Marking 711.52
  Notification of delivery 713.212
  Offices 711.62
  Payment of duty 713.4
  Prohibited articles 711.2
  Recording requirements 713.46
  Refund of duty 713.6
  Registered Mail 711.3
  Repacking after customs examination 711.51
  Reporting requirements 713.46
  Return of items 713.43
  Samples for advisory information 711.4
  Sealed mail, examination of 711.3
  U.S. customs offices, directory of 711.62
  Uncollected items 713.5
Customs forms 123
  Audio-visual equipment, return of 713.44
  Dutiable mail Exhibit 123.61
  Detached declaration forms 435
  First-Class Mail International Exhibit 123.61; 242.2
  IPA Exhibit 123.61 Note
  M-bags 123.61; 264.3
  Priority Mail International 123.61; 232.6; 232.62; 232.63
  Reporting of uncollected items 713.52
  Returned items to the U.S. 713.43
Customs treatment
  Clearances 712
  Delivery fees 712
  Foreign customs information 131.34
  Forms (see Customs forms)

D

Damage to mail (see Indemnity claims/payments)
Dangerous goods 135; 136
Dead mail (see also Undeliverable mail) 770
Delivery service
  Banks, parcels addressed through 743
  Domestic origin 762
  Dutiable mail 713.2
  Foreign dispatch notes 744
  Foreign origin 764
  Insured parcels 751.2
  Parcels addressed through banks or other organizations 743
  Registered Mail 752
  Restricted delivery 754
  Ship mail 763
Delivery to addressee only (see Restricted delivery)
DineroSeguro (see Sure Money)
Direct sacks of printed matter to one addressee (see M-bags)
Directory service 765; DMM 507
Dispatch notes, foreign 744
Dispatch of mail
  Registered Mail 441
Drawback arrangements 580
Dutiable merchandise (see Customs)

E

Eggs
  Certificate of mailing 553.12; 553.121; 553.2
  Charges 552
  Dried, export regulations for 550
  Marking 553.11
  Packing/packaging 138.32
  Prohibitions 138.31
Endorsing mail (see Marking)

Envelope specifications
Borders 241.215
Colors 241.213; 241.233
Dimensions 241.212; 241.232
Quality 241.214; 241.234
Window envelopes 241.216
Explosive material 136
Export controls 531.1
Export licenses 532
Additional information 532.4
Definition 531.2
General 532.1
Shipper's export declaration 533.1
USPS processing 533.3
Export regulations
Automated Export System (AES) 520
Certificate of Mailing dried whole eggs 553.12
Commodities and technical data 530
Consular and commercial invoices 570
Drawback arrangement 580
Eggs, dried whole 550
Electronic Export Filing 520
General export licenses 532
Individual licenses 541.1
Licenses 532; 541
Munitions 540
Shipper's export declaration 533.1
Technical data 530; 540
Express Mail International 220
Claims 922
Customs forms Exhibit 123.61; 222.5
Description 221.1
Dimensions 221.52
Indemnity claims 935
Inquiries 920
Insurance 222.8
Loss of mail 921.51
Mail preparation 224
Payments 935; 942
Postage 223; ICL
Refunds 942
Shortpaid mail 423.23
Weight 221.51
Extra services
Availability ICL; Chapter 3
Certificate of Mailing 310
Fees 313; 321.3; 322.3; 323.3; 333; 343; 353; 371.3; 382.4; ICL
Insured mail 320
International money orders 371
International reply coupons 381
Registered Mail 330
Restricted delivery 350
Return receipt 340

F

Fatty substances 131.52c
Federal government (see Official mail)
Fees, extra services ICL
Fictitious matter or name 132.1d; DMM 601.12.5
Firearms 137
Firm mailing books for accountable mail 313.1; 323.61; 334.11
First-Class Mail International 141.5; 240
Customs forms Exhibit 123.61; 242.2
Description 141.3; 241.1
Dimensions 241.212; 241.221; 241.232; 241.242; 241.243
Dutiable merchandise 242.21
Forms, customs 242.2
Mail preparation 244
Marking 244.2
Packaging 244.4
Postage prices 243; ICL
Priority Mail International
Flat Rate Envelope 232.1
Sealing 244.3; 244.4
Weight limit 241.211; 241.231; 241.241
Flammable materials 136
Food 138.4
Foreign dispatch notes 744
Foreign Exchange Office List Exhibit 292.452 and Exhibit 293.452
Foreign mail (see also Official correspondence)
Advance payment 783
IBRS 382.7
Payment required 781
Residency 782.1
Export Controls 531.1
Forms
Customs (see Customs forms)
Postage refunds 941.2

Forwarding mail 760
Backstamping 764.3
Customs entry forms 764.24
Directory service 765
Domestic-origin mail 762
Dutiable mail 713.3
Foreign mail 761.1
Foreign-origin mail 764
International insured mail 751
Parcels 764.13
Registered Mail 752.13
Ship passenger and crew mail 763.4
Fragile articles 131.52

G

Gases, compressed 136
General information 110
Global Express Guaranteed 210
Gold, mailing 134.2
Graphic matter 132
Guns 137; DMM 601

H

Honeybees, mailing 138.1

I

IBRS (see International Business Reply Service)
Immoral or obscene articles 132.1
Improperly addressed mail 133
Improperly prepared mail 430
Inbound mail
Domestic origin 762
Foreign origin 764
Forwarding (see Forwarding mail)
Insured parcels 751
Items mailed abroad by or on behalf of senders in the U.S. 780
Paquebot 763
Registered Mail 752
Restricted delivery 754
Return receipt 753
Undeliverable mail 770
Indemnity claims/payments Chapter 9
Exceptions to payments 932; 933.12; 933.14; 934.13
Express Mail International 222.7; 921; 935; 942
Filing claims 922.2
Inquiry 921
Insured parcels 933
International claims 922.2
Payments, exceptions to 932; 933.12; 933.14; 934.13
Priority Mail International 933
Registered Mail 335; 934
Index of Countries and Localities page 231
Individual Country Listings (ICL) page 243
Individual export licenses 541.1
Exemptions 541.122
Government shipments 541.3
Marking 542.1
Processing 542.2
Infectious and noninfectious substances 135
Inquiries 921
Damaged mail 921.53; 922.4
Express Mail International 920; 935; 942
Foreign mail 921.542
Global Express Guaranteed 212.43
Insured and ordinary parcels Exhibit 921.2
Missing contents 921.53
Nondelivery for 921.51
Processing 921.4
Express Mail International Exhibit 921.2
Insured and ordinary parcels Exhibit 921.2
Registered Mail Exhibit 921.2
Registered Mail 921.3
Return receipt 921.52
Wrapper found without contents 921.54
Insufficient address 431; DMM 507
Insured mail 320
Availability 321.2, 322.2, 323.2; 751; ICL
Claims 922
Description 321.1, 322.1, 323.1
Express Mail International 222.7
Fees 321.3, 322.3, 323.3; ICL
Indemnity claims and payments 920; 930
Limits of insurance 321.3, 322.3, 323.3; ICL
Mailing receipts 323.71

Marking 323.72
Parcels 751
Processing requests 323.6
Return receipts 322.4, 323.4; 340
International Business Reply Service (IBRS) 382
Availability 382.2
Description 382.1
Distribution 382.3
Fees 382.4
Foreign service 382.7
Format requirements 382.6; 382.7
IBRS distributors 382.3
Size and weight requirements 382.5
International claims and inquiries 920; 930
International customized mail 297
International mail
Air service 140
Cards (see postcards)
Categories 140
Definition 141
Express Mail International 141.3; 220
First-Class Mail International 141.5; 240
Global Express Guaranteed 141.2; 210
Indemnity claims 920; 930
Postcards 241.22
Priority Mail International 141.4; 230
Reply cards and envelopes 132.2
Size limits 211.22; 221.52; 231.22; 241.212; 241.221; 241.232; 241.242; 241.243; 273.2; 292.21; 293.21
International Money Transfer services 370
International postal money orders (see Money orders, international postal)
International Priority Airmail (IPA) Service 292
International reply coupons 381
Availability 381.2
Description 381.1
Processing requests 381.4
Rate of exchange 381.3
Selling price 381.3
International Surface Air Lift (ISAL) Service 293
IPA (see International Priority Airmail (IPA) Service)
Irregular mail 740
ISAL (see International Surface Air Lift (ISAL) Service)
Items mailed aboard ships (Paquebot) 763

J

Japan
Money orders 371.53
Jewelry, mailing 134.2

K

Knives 137; DMM 601

L

Labeling
Exempt human and animal specimens 135.33
Infectious substances 135.31
M-bags 264.2
Noninfectious substances 135.32
Liquids DMM 601
Alcoholic DMM 601
Combustible 136
Live organisms (see Animals)
Losses of mail (see Indemnity claims/payments)
Lottery matter DMM 601

M

M-bags 260
General 261.1
IPA 262.2; 292.13
ISAL 262.3; 293.13
Marking 264.1
Payment methods 262.5
Postage prices ICL
Preparation for mailing 264
Size limits 263.2
Weight limits 263.1
Magnetized materials 136
Mail preparation 120
Certificate of Mailing 314.2
Express Mail International 224
First-Class Mail International 244
Global Express Guaranteed 214
IPA 292.4
M-bags 264
Matter for the blind 274
Priority Mail International 234
Mailability 130
Animals 138.1
Dangerous goods 135; 136
Graphic matter 132

Improperly addressed mail 133
Infectious substances 135
International 131.2
Limits 131.1; 131.2
Mailer responsibility 131.4
Perishable matter 138
Plants 138.2
Preparation requirements 131.5
Printed matter 260
Prohibited and restricted articles 131.32
Radioactive materials 135.5
Return of mail 131.33
Seizure of mail 131.33
Special requirements 131.52; 135
Valuables 134
Written matter 132
Mailer responsibility
International mail 112
Mailability 131.4
Mailing receipts (see Insured mail, Registered Mail service, and Certificate of Mailing)
Marking
Animals 722.12
Customs declaration 323.72; 711.52
Dried whole eggs 553.11
First-Class Mail International 244.2
Individual licenses 542.1
Infectious and noninfectious substances 135.3
Insured mail 323.72
IPA 292.42
Licenses 532.1; 542.1
M-bags 264.1
Matter for the blind 274.2
Plants 722.12
Postcards 244.2
Priority Mail International 234.2
Quarantine 722.12
Registered Mail 334.2
Restricted delivery 354.1
Return receipt 344.2
Undeliverable mail 770; DMM 507
Matches 136
Matter for the blind 270
Description 271
Marking 274.2
Packaging 274.4
Postage rates 272; ICL
Preparation requirements 274
Sealing 274.3
Size limits 273.2
Weight limit 273.1
Meter stamps 152.2a
Military mail, APO/FPO DMM 703.2
Missing contents (see Indemnity claims/payments)
Money, mailing 134.2
Money orders, international postal 371
Authorization form 371.41
Availability 371.2
Canadian 371.52
Description 371.1
Fees 371.3; ICL
Form, authorization 371.41
Inquiries 371.7
Japanese 371.53
Refunds 371.72
Munitions 540

N

Nonpostage stamps, placement of 153
Nonmachinable surcharge 241.217

O

OAS (Organization of American States) 142.4
Official correspondence 115
Distribution, transportation and 115.13
Foreign individuals 115.3
Foreign postal authorities 115.2
International money orders 115.15
Investigations 115.14
Operations 115.11
Permitted correspondence 115.21
Policy and representation 115.12
Prohibited correspondence 115.22
Transportation and distribution 115.13
Official mail 142
Federal government 142.1
Former presidents and surviving spouses 142.3
OAS General Secretariat 142.4
Pan American Sanitary Bureau mail 142.5
Postal Service 142.2
Open-panel envelopes 241.216f
Organization of American States (OAS) 142.4

Outbound mail
Extra services mail 440
Forwarding (see Forwarding mail)
Improperly prepared mail 430
Postmarking 410
Shortpaid mail 420
Unpaid mail 420
Oversized items 432; 433
Oxidizing agents 136

P

Packing/packaging mail 121; DMM 601
Eggs 138.32
Fatty substances 131.52c
Fragile articles 131.52a
Infectious and noninfectious substances 135.31
Liquids and oils DMM 601
Matter for the blind 274.4
Perishables 138.32
Powders 131.52d
Priority Mail International 234.5
Pan American Sanitary Bureau mail 142.5
Paquebot 763
Perishables 138.32
Permit imprints 152.44; 223.22; 233.22; 243.3; 292.334; 293.334; DMM 604
Pickup On Demand Service
Express Mail International 225.2
Global Express Guaranteed 215.3
Priority Mail International 235.2
Plants
Inspection station and offices 723
Quarantine inspection 720
Restrictions 138.2
Platinum, mailing 134.2
Poisons 136
Postage 150
Articles mailed aboard ships (Paquebot) 763
Eggs, dried whole 553.21
Express Mail International prices 223; ICL
First-Class Mail International 243
Foreign markings 742.1
Global Express Guaranteed 213
International reply coupons 381
IPA 292.3
ISAL 293.3
M-bags 262
Matter for the blind 272
OAS, General Secretariat 142.4
Payment methods 152
Permit imprint 152.4; 223.22; 233.22; 243.3; 292.334; 293.334; DMM 604
Placement of postage 153
Postcards ICL
Precanceled stamps 152.2
Prepayment 152.1
Prices ICL
Printed matter 260
Priority Mail International 233; ICL
Refunds 940
Remailed items 154
Shortpaid mail 730
Stamps 152.2
Postal Qualified Wholesaler Program 610
Postcards 241.22
Additional Standards 241.224
Attachments 241.227
Dimensions 241.221
Folded cards 241.229
Marking 244.2
Nonpermitted attachments 241.228
Permitted attachments 241.227
Postage ICL
Privately manufactured 241.224
Quality 241.223
Reply-paid cards 434
Postmarking
Articles mailed aboard ships (Paquebot) 763
Certificate of Mailing 312; 314.22
Insured mail 323.63
International reply coupons 381.4
Outbound mail 410; POM 443.3
Registered Mail 334.3
Return receipt 753.1
Powders 131.52d
Precanceled postage stamps 152.2
Precious stones or items, mailing 134.2
Prepayment of postage 152.1
Priority Airmail Service, International (see International Priority Airmail (IPA) Service)
Priority Mail Global Guaranteed (see Global Express Guaranteed)

Priority Mail International 230
Addressing 122
Charges for return 771.6
Customs declaration Exhibit 123.61; 232.6
Definition 141.4
Foreign customs information 123.61; 232.6
Forms required 123.61; 232.6; ICL
Forwarding 760; 764.13
General 231.1
Insured mail 751; 933
Marking 234.2
Mailing locations 235.1
Official mail 142
Postage 233.14; 233.15; 233.16; ICL
Postmarking 410
Preparation requirements 234
Return charges 771.6
Sealing 234.4
Shortpaid 423
Size limits 231.22
Stamps, placement of 153
Undeliverable mail 770
Weight limits 231.21; ICL
Pyrophoric liquids, prohibited 136

Q

Quarantined plants (see Plants)

R

Radioactive materials 135.5
Refunds
Applications 941.2
Customs duty 713.6
Delivery fee 712.4
International reply coupons 381
Postage 940
Refused by sender 771.71
Dutiable mail 772.2
Registered Mail service 330
Availability 332
Claims 335; 922
Customs 711.3
Declaration of value 334.12
Description 331
Dispatch 441
Fees 333; ICL
Inbound mail 752
Indemnity claims and payments 920; 930; 940
Inquiries from customers 920
Limits 333
Mailing receipt 334.1
Marking 334.2
Matter for the blind 334.42
Outbound mail 440
Postmarking 334.3
Processing requests 334
Registration number 334.1
Restricted delivery 334.5; 350
Return receipt 334.5; 340
Sealing 334.4
Treatment of mail 440; 752.13
Remailed articles, postage for 154; 771.4
Reply cards (see also International Business Reply Service) 382
Reply coupons
International (see International reply coupons)
Report of mailings 785
Reporting mail loss 910
Responsibility of mailer 112
Certificate of mailing 314.21
Insured mail 323.7
Packaging 121
Registered Mail 334.12
Return receipt 344.11
Restricted delivery 350; 754
Availability 352
Description 351
Fee 353; ICL
Inbound mail 754.1
Processing requests 354
Restricted materials 131.3
Return address 122.2
Return charges
First-Class Mail International 771.5
Priority Mail International 771.6
Return receipt 340
Availability 342
Description 341
Fees 343; ICL
First-Class Mail International 242.43
Foreign, missing 753.2
Improperly completed or not received 344.3; 921.52
Inbound mail 753

Insured parcels 323.7
Marking 344.2
Missing, foreign 344.3; 753.2
Priority Mail International 232.94
Processing requests 344
Registered Mail 334.5

S

Sacking requirements
IPA 292.46
ISAL 293.46
M-bags 264.2
Sealing
First-Class Mail International 244.3
Insured parcels 323.73
IPA 292.43
ISAL 293.43
Matter for the blind 274.3
Priority Mail International 234.4
Registered Mail 334.4
SED (see Shipper's Export Declaration)
Sender's responsibility (see Responsibility of mailer)
Shipper's Export Declaration (SED) 533.1
Shortpaid and unpaid mail 420
Canada 732
Credit 423.3
Express Mail International 423.23
First-Class Mail International 423.21
Inbound 730
Outbound 420
Parcels 423.22
Return address 422.1; 422.2
Silver, mailing 134.2
Size limits
Express Mail International 221.52
First-Class Mail International 241.212; 241.221; 241.232; 241.242; 241.243
Global Express Guaranteed 211.22
IBRS 382.5
ISAL 263.1; 293.21
M-bags 263.2
Matter for the blind 273.2
Postcards 241.221
Priority Mail International 231.22
Special drawing right (SDR) 323.62
Stamps 152.2
Items mailed aboard ships (Paquebot) 763
Meter stamps 152.2
Placement of 153
Subscription availability information 114
Supplemental services 380
Sure Money (DineroSeguro) 372

T

Travelers checks, mailing 134.2

U

Undeliverable mail 770
Domestic-origin, outbound 771
Endorsements 772.1; DMM 507
First-Class Mail International 771.52
Foreign-origin mail, inbound 772
Priority Mail International 771.6
Undersized items 432
Unpaid Mail (see Shortpaid and unpaid mail)

V

Valuable articles 134
Violence, matter inciting to 132.1; DMM 601

W X Y Z

Water-reactive substances 136
Weapons 137
Weight limits (see ICL)
Express Mail International 221.51
First-Class Mail International 241.211; 241.231; 241.241
Global Express Guaranteed 211.21
IBRS 382.5
ISAL 263.1; 293.21
M-bags 263.1
Matter for the blind 273.1
Priority Mail International 231.21
Window envelopes 241.216
Written matter 132

This page intentionally left blank