705 Advanced Preparation and Special Postage Payment Systems

Overview

1.0 RESERVED
2.0 Manifest Mailing System
3.0 Optional Procedure Mailing System
4.0 Alternate Mailing System
5.0 First-Class Mail or Standard Mail Mailings With Different Payment Methods
6.0 Combining Mailings of Standard Mail, Package Services, and Parcel Select Parcels
7.0 Combining Package Services and Parcel Select Parcels for Destination Entry
8.0 Preparing Pallets
9.0 Combining Bundles of Automation and Nonautomation Flats in Trays and Sacks
10.0 Merging Bundles of Flats Using the City State Product
11.0 Combining Automation Price and Nonautomation Price Flats in Bundles
12.0 Merging Bundles of Flats on Pallets Using a 5% Threshold
13.0 Merging Bundles of Flats on Pallets Using the City State Product and a 5% Threshold
14.0 Combining Bundles of Flats Within FSS Zones
15.0 Combining Standard Mail Flats and Periodicals Flats
16.0 Plant Load Mailings
17.0 Plant-Verified Drop Shipment
18.0 Priority Mail Express Open and Distribute and Priority Mail Open and Distribute
19.0 Metered Mail Drop Shipment
20.0 Postage Due Weight Averaging Program
21.0 Optional Combined Parcel Mailings
22.0 RESERVED
23.0 Full-Service Automation Option
24.0 Scan Based Payment
25.0 Alaska Bypass Service

1.0 RESERVED

2.0 Manifest Mailing System

2.1 Description

2.1.1 Using an MMS

A manifest mailing system (MMS) is a method of verifying postage payment of permit imprint mailings, as an alternative to weight verification. The MMS is an automated system that allows a mailer to document postage and fees for all pieces in Priority Mail Express (Electronic Verification System "eVS" only under 2.9), First-Class Mail, Standard Mail, Parcel Select, Package Services, and international permit imprint mailings. Each piece is assigned a unique identification number that is listed on the manifest along with pertinent information about the mailpiece. The USPS randomly selects pieces from the mailing and compares them to the manifest to determine if postage was accurately reported. The standards in 2.2 describe how to mail using an MMS.

2.1.2 Electronic Verification System

Mailers using a MMS when presenting Parcel Select destination entry mailings under 256.2.0 or commingled parcel mailings under 6.0 or 7.0, may document and pay postage using the Electronic Verification System (eVS) (see 2.9). Business Mailer Support (BMS), USPS Headquarters, must approve these systems. Unless authorized by Business Mailer Support, mailers may not commingle eVS mail with non-eVS mail within the same mailing or place eVS mail and non-eVS mail in or on the same mailing container.

2.2 Basic Standards

2.2.1 Authorization Document

A MMS is established through a letter of authorization as follows:

a. A MMS approved by the district, as defined in 2.4.6a, is authorized with a letter signed by the district Customer Service manager, and addressed to the mailer making the MMS application. The authorization letter contains provisions regarding mailer and USPS responsibilities, including document retention and quality control.

b. A MMS approved by Business Mailer Support is authorized with a letter (or previously-approved service agreement) signed by the Business Mailer Support manager. The authorization letter contains provisions regarding mailer and USPS responsibilities, including document retention and quality control.

2.2.2 Mailer System

The mailer must have an automated system that produces mail consistent with postal standards and calculates postage accurately. For presorted mail, the system also must determine the qualifying presort level and the correct price of postage for each piece and perform the presort routines. The mailer must assign a unique identification number to each piece. Letter- and flat-size mail produced using batch processing must bear the keyline information in 2.3. The system must produce a manifest for each mailing that allows USPS verification of the postage and levels of presort. The manifest must account for every piece in the mailing, as follows:

a. For presorted letter- and flat-size mail produced using batch processing, the manifest must list destination ZIP Codes, presort categories, batch number ranges, postage amounts, and cumulative postage amounts.

b. For mail produced using itemized processing, the manifest must list the postage for each piece and those factors used to calculate the correct amount of postage, such as the destination postal zone and piece weight. Each page of the manifest must show cumulative postage totals.

c. When extra services are used, the manifest must include the fees for each piece.

d. A summary listing the required information on the postage statement must be included as the last page of the manifest.

e. A separate summary and register of mailings is required for all plant-verified drop shipment (PVDS) mailings.

2.2.3 Manifest Format

The two basic manifest formats are:

a. *Itemized processing.* Each piece of mail is individually listed by unique identification number, weight, and other pertinent information. Publication 401, *Guide to the Manifest Mailing System*, contains specific formats for manifests using itemized processing.

b. *Batch processing.* The mailing is divided into groups of mailpieces with consecutive identification numbers. Only the identification numbers of the first and last pieces of each group are listed, along with the piece count and the total postage charges for the entire batch. This method is limited to piece price letter- and flat-size mailings. Publication 401 contains specific formats for manifests using batch processing.

2.2.4 Mailer Quality Control

The mailer must implement a quality control program that ensures proper mail preparation and provides accurate documentation. The authorization letter or service agreement must detail the USPS-approved quality control procedures.

2.2.5 Permit Imprint

Mailings deposited under the MMS program must meet the standards for permit imprint mail in 604.5.0, except that presorted letter-size or flat-size mail produced using batch processing must include the qualified price abbreviation in the keyline.

2.2.6 Marking

MMS mailings must meet the marking standards for the price claimed. Markings on presorted letter-size and flat-size mail produced using batch processing are placed in the keyline as described in 2.3.3. Markings on itemized mailpieces may be:

a. Incorporated as part of the permit imprint.

b. Printed or rubber-stamped above the address and immediately below or to the left of the permit imprint.

c. Produced as otherwise specified in the MMS authorization.

d. Provided in an endorsement line in the address area, directly above the top line of the address, if no additional information except carrier route information appears on the endorsement line.

2.2.7 Postage Statement

The mailer must submit a complete postage statement with each mailing. If the entry office postmaster approves, mailers may submit a computerized facsimile of the applicable USPS postage statement. Data fields may be omitted on facsimile if they pertain to prices not claimed in the mailing.

2.2.8 Manifest Adjustments

When mailpieces are mutilated, spoiled, or destroyed during normal operations and cannot be presented as part of the mailing, a method of adjusting the manifest and postage statement that has been approved by the USPS must be used. Whether the method in 2.2.8a or 2.2.8b is used, the total number of pieces must be deducted at the end of the manifest and the postage statement adjusted. Use one of the following methods:

a. For manifests using itemized processing, line out the identification number, weight, and postage information (if applicable, also line out the piece on Form 3877) or write the unique identification number, piece weight, and postage (and, if applicable, the fee amount) on a separate listing. Deduct the total number of pieces, piece weights, and postage and fees from the totals shown on the manifest, summary, and postage statement.

b. For manifests using batch processing, write the adjustments directly on the manifest listing showing the consecutive serial number, weight increment, price category, and postage of each item next to the batch that includes the serial number. Alternatively, a separate list may be prepared as an attachment to the manifest showing, for each spoiled piece, the consecutive serial number, weight increment, price category, and postage. The total number of pieces, piece weight, and postage must be deducted from the batch, manifest summary, and postage statement.

2.3 Keyline

2.3.1 Batch Mailings

The keyline printed on each piece of presorted letter- or flat-size First-Class Mail or Standard Mail produced using batch processing must contain, in order, the consecutive unique piece number, the weight increment (First-Class Mail only), the price category for which the piece qualifies, and the postage paid by weight and price category (see Exhibit 2.3.1).

Exhibit 2.3.1 Letter-Size Keyline Information

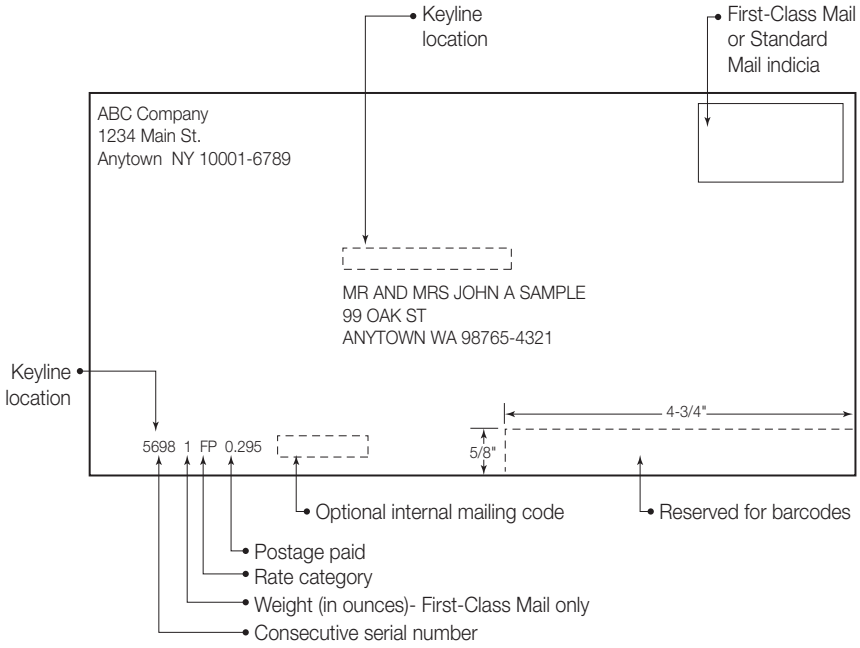

2.3.2 Mailer Codes

Codes for internal mailer use may be printed to the right of the postage-paid information, if at least two spaces separate the postage paid and any internal code information.

2.3.3 Price Category Abbreviations

Keylines on First-Class Mail or Standard Mail may use only the price category abbreviations in Exhibit 2.3.3a or Exhibit 2.3.3b, respectively. All pieces that qualify for more than one postage price must show each price category abbreviation, separated by a "/" (slash) (e.g., EB/DS).

a. First-Class Mail:

Exhibit 2.3.3a Price Category Abbreviations—First-Class Mail

CODE	PRICE CATEGORY
AV	Automation 5-Digit-
AT	Automation 3-Digit
AB	Automation AADC Letters
AB	Automation ADC Flats
MB	Automation Mixed AADC Letters
MB	Automation Mixed ADC Flats
FP	Presorted
SP	Single-Piece Price (when fewer than 500 pieces accompany automation price mail)

b. Standard Mail:

Exhibit 2.3.3b Price Category Abbreviations—Standard Mail

CODE	PRICE CATEGORY
AV	Automation 5-Digit [letters only]
AT	Automation 3-Digit [letters only]
AB	Automation AADC Letters
AB	Automation AADC Flats
MB	Automation Mixed AADC Letters
MB	Automation Mixed ADC Flats
MA	Machinable AADC Letters
MM	Machinable Mixed AADC Letters
NV	Nonmachinable 5-digit Letters
NT	Nonmachinable 3-digit Letters
NA	Nonmachinable ADC Letters
NM	Nonmachinable Mixed ADC Letters
EB	Enhanced Carrier Route Basic
EH	Enhanced Carrier Route High Density or High Density Plus
ES	Enhanced Carrier Route Saturation
DB	Destination Network Distribution Center (DNDC)
DS	Destination Sectional Center Facility (DSCF)
DD	Destination Delivery Unit (DDU)

2.3.4 Keyline Location—Batch Mailings

The keyline must be readily identifiable and placed anywhere on the address side that does not conflict with other standards (see Exhibit 2.3.1 for examples). On letter-size mail, the keyline must not interfere with the OCR read area (see 202.2.1) or barcode clear zone (see 202.5.1). If printed on an insert, the keyline must conform to 202.5.0.

2.3.5 Unique ID Number Location—Itemized Mailings

The unique identification number must be printed on the address side of each itemized piece. It may be a product number or any other number that is not duplicated within the mailing. The numbers must be printed in overall ascending order, or in ascending order within each zone, 5-digit, 3-digit, or NDC ZIP Code area on the manifest.

2.4 Authorization

2.4.1 Application

[1-26-14] The mailer must submit an MMS application and supporting documentation as specified on the application to the postmaster of each Post Office where mailings will be deposited and under the publications as follows:

a. Publication 401, *Guide to the Manifest Mailing System*, contains an application to mail using an MMS.

b. Publication 205, *Electronic Verification System Technical Guide*, provides the eVS application procedures for mailers. Customers using an Electronic Manifesting Solution for Parcels must also establish a user account and mailer agreement with USPS in the Business Customer Gateway at *https://gateway.usps.com*.

2.4.2 Approval Review

After the mailer completes the development and installation of the MMS, the following will occur:

a. For a MMS approved by the district, as defined in 2.4.5a, a district USPS representative will review the system and the district Customer Service manager will give final approval if the system is functioning as required.

b. For a MMS approved by Business Mailer Support, as defined in 2.4.5b, a district USPS representative will review the system and the district Customer Service manager will give temporary approval if the system is functioning as required. A final review will be conducted by a Business Mailer Support representative within 90 days of the date of the temporary approval, and the Business Mailer Support manager will give final approval if the system is functioning as required.

2.4.3 General Requirements for Authorization

General requirements for authorization are as follows:

a. Verification samples are deemed representative of the entire mailing, and postage adjustment calculations are applied to the total mailing. The mailer must pay additional postage for any underpayments identified during USPS verification. A mailer may elect to overpay postage for pieces that are borderline weight or price increments to avoid postage underpayment adjustments.

b. If the total postage or the total weight of pieces sampled during a verification results in an underpayment by more than 1.5%, total postage for the mailing is adjusted.

c. For eVS mailings prepared under 2.9, USPS charges eVS mailers for postage due for any underpaid, unmanifested, or mis-shipped destination delivery unit (DDU) parcels at the end of the review period following the monthly mailing period as follows:

   1. *Underpaid Parcels.* If the total postage of parcels sampled during the mailing period indicates that the mailer has underpaid postage by more than 1.5% when compared with the corresponding parcel records in the mailer's manifest files, USPS determines additional postage due based on the total postage already paid for the mailing month using the procedures in Publication 205.

   2. *Unmanifested Parcels.* USPS charges eVS mailers for parcels not listed in the mailer's manifest files but identified by USPS processing scans or acceptance and delivery scans as being mailed. USPS determines the postage charges using sampling data and the procedures in Publication 205.

   3. *Mis-Shipped DDU Parcels.* USPS charges eVS mailers the appropriate single-piece price less the original price paid for parcels identified by acceptance scans to be deposited at incorrect destination delivery units. USPS transports these mis-shipped parcels to the correct destination delivery units. USPS determines the additional postage using scanning data and the procedures in Publication 205. Parcels mis-shipped at destination NDCs or destination SCFs are handled through parcel sampling and are treated as underpaid parcels.

d. The mailer must notify the USPS in writing of any system change that affects postage calculation, generation of required documentation, or mail presorting before the mailing is presented.

e. Postage must be paid by an advance deposit account from which funds may be deducted by the USPS to cover any deficiency discovered after acceptance of the mail.

2.4.4 Authorization Period

The authorization period for an MMS is as follows:

a. A MMS, not approved to use the Minimum Volume Reduction Provision (MVRP) defined in Publication 401, and approved by the district as defined in 2.4.5a, remains in effect until such time as the district manager or the mailer cancels the authorization or agreement. If Postal Service periodic reviews or mailer

supplied information demonstrates a need for modification, the agreement or authorization will be modified with concurrence by the district manager and the mailer.

b. A MMS approved to use a MVRP as defined in Publication 401, remains in effect for the time period specified in the MVRP, unless the district Customer Service manager or the mailer cancels the MMS authorization. The MVRP authorization will be reviewed at the end of the authorization period and may be renewed by decision of the district Customer Service manager.

c. A MMS approved by Business Mailer Support as defined in 2.4.5b, remains in effect until such time as the Business Mailer Support manager or the mailer cancels the agreement or authorization. If Postal Service periodic reviews or mailer supplied information demonstrates a need for modification, the agreement or authorization will be modified with concurrence by the Business Mailer Support manager and the mailer.

2.4.5 Approval Authority

Approval authority for manifest mailing systems is as follows:

a. The district Customer Service manager approves systems that produce separate or mixed mailings of single-piece price First-Class Mail, Package Services, Parcel Select, international mail, including mailings with extra services and predetermined weights, or presorted First-Class Mail letter systems not exceeding 25,000 pieces per manifest or 50,000 total pieces in daily manifested mail volume.

b. The Business Mailer Support manager, USPS Headquarters, approves MMS that produce presorted First-Class Mail (except as noted in 2.4.5a) or Standard Mail mailings, Package Services or Parcel Select presort mailings, PVDS mailings, or eVS mailings.

2.4.6 Denial

If an MMS application is denied, the mailer may appeal the decision as follows:

a. For MMS applications denied by the district Customer Service manager, the mailer may, within 15 days from the receipt of the notice, file a written appeal, including any additional evidence in support of why the MMS should be authorized. This appeal is sent to the Business Mailer Support manager, USPS Headquarters, who issues the final agency decision.

b. For MMS applications denied by the Business Mailer Support manager, the mailer may, within 15 days from the receipt of the notice, file a written appeal, including any additional evidence in support of why the MMS should be authorized. This appeal is sent to the vice president, Mail Entry and Payment Technology, USPS Headquarters, who issues the final agency decision.

2.4.7 Renewal

Only MMS with an approved Minimum Volume Reduction Provision (MVRP) requires renewal. MMS with MVRP are renewed prior to the expiration date by the Sales manager that originally authorized the MVRP. The Sales manager reviews all supporting documentation to determine if the mailer continues to meet the requirements of the MVRP. The MVRP is renewed when the review demonstrates that the MVRP continues to meet established requirements.

2.5 Revocation

2.5.1 Revocation Authority

The revocation authority for MMS is as follows:

a. The district Customer Service manager may revoke a MMS authorization when the final approval had originally been given through that office.

b. The Business Mailer Support manager may revoke any MMS authorization.

2.5.2 Reasons for Revocation

The reasons for revocation of an MMS are as follows:

a. The mailer provides incorrect data on the manifest list and appears unable or unwilling to correct the problems.

b. The mailer is not properly completing the required quality control procedures.

c. The mailings no longer meet MMS criteria established by standards in 2.0 or in the MMS authorization letter or service agreement.

d. The mailer does not present mailings under MMS for more than 6 months (except as noted in the authorization letter or service agreement).

e. The mailer continues to present mailings that are improperly prepared and proper postage is not being paid.

2.5.3 Corrective Action

After a notice of revocation is issued, the mailer and the USPS determine corrective actions, including an implementation schedule. At the conclusion, the USPS reexamines the mailer's system. Failure to correct identified problems is sufficient grounds to revoke the mailer's MMS authorization.

2.5.4 Appeal of Revocation

The mailer may appeal following receipt of the notice of revocation and may continue to mail under the MMS during the appeal process. Appeals are handled as follows:

a. For MMS authorizations given final approval by the district Customer Service manager, the mailer has 15 days from the date of receipt of the notice to file a written appeal with the Business Mailer Support manager. The appeal must include the reason why the MMS authorization should not be revoked. The Business Mailer Support manager issues the final agency decision. The final revocation takes effect 15 days after receipt by the mailer.

b. For MMS authorizations given final approval by the Business Mailer Support manager, the mailer has 15 days from the date of receipt of the notice to file a written appeal with the vice president, Mail Entry and Payment Technology, USPS Headquarters. The appeal must include the reason why the MMS authorization should not be revoked. The vice president, Mail Entry and Payment Technology, USPS Headquarters, issues the final agency decision. The final revocation takes effect 15 days after receipt by the mailer.

2.6 Priority Mail Express Manifesting Agreements

2.6.1 Description

Priority Mail Express Manifesting (PMEM) is an automated system that allows a mailer to document postage and fees for all pieces in a Priority Mail Priority Mail Expressing by transmitting an electronic file to the USPS.

2.6.2 What May Be Manifested

[1-26-14] PMEM may be used to pay postage for Priority Mail Express and Priority Mail Express Military Service to qualifying APO/FPO and DPO addresses. PMEM also may be used to pay any extra service fees. Postage for other classes of mail cannot be paid through PMEM.

2.6.3 Service Guarantee

Priority Mail Express items mailed using an PMEM are covered by current Priority Mail Express service and postage guarantees:

a. Mailers using Priority Mail Express Manifesting (PMEM) receive Sunday/holiday guaranteed delivery at no additional charge without paying a premium.

b. Refunds for service failures are subject to the standards in 604.9.5. Reimbursements are paid under 604.9.5.9.

2.6.4 Postage Payment

Postage for PMEM is paid through a USPS Corporate Account (USPSCA) using the information in the mailer's electronic file. Mailers wishing to mail using a PMEM system must apply for a USPSCA using the procedures in 214 before a PMEM agreement will be authorized.

2.6.5 Mail Volume

PMEM is designed for large volume mailings; however, there are no minimum volume requirements.

2.7 Basic Standards

2.7.1 Mailer Participation Requirements

To participate in Priority Mail Express Manifesting, mailers must:

a. Develop or purchase computer software that will meet the PMEM technical requirements outlined in Publication 97, *Priority Mail Express Manifesting Technical Guide*.

b. Obtain a Mailer ID for each mailing location.

c. Obtain USPS certification that the mailer's software and barcoded labels meet PMEM requirements.

d. Develop and administer effective quality control procedures that will ensure the integrity of the system.

e. Use one-ply Priority Mail Express labels that meet the requirements in Publication 97.

f. Be able to have the USPS accept and dispatch PMEM items from their company or a postal facility at the times approved by the district marketing manager.

g. Receive authorization to mail items using PMEM under 2.8.

2.7.2 Mailer Quality Control

The mailer must implement a quality control program that ensures proper mail preparation and provides accurate documentation. The service agreement must detail the USPS-approved quality control procedures.

2.7.3 Mailer System Accuracy/Manifest Adjustments

The USPS verifies the accuracy of the PMEM system by selecting mailpieces at random and comparing them to a verification manifest. If the sampling indicates that the total postage (for the sample mailpieces) is understated by more than 1.5%, the mailer must either withdraw the mailing or pay postage at an adjusted price. Specific procedures are outlined in Publication 97.

2.7.4 Markings, Label Specifications, and Barcodes

No special price markings are required on PMEM items. However, barcoded PMEM labels are required on all PMEM mailpieces, and specific label formats must be followed. Detailed barcode and Priority Mail Express label specifications and options are published in Publication 97. The labels are subject to approval by Product Information Requirements, Product Development, USPS Headquarters, and the National Customer Support Center (NCSC). Mailers must follow the specific certification procedures outlined in Publication 97.

2.7.5 Mail Entry

Mailers must present a photocopy or facsimile of Form 3152-E and a verification manifest with each mailing.

2.7.6 Manifest Data Edit Error/Warning Listing

Mailers must retrieve and retain the Manifest Data Edit Error/Warning Listing for each mailing that will be made available by the host computer. The listing confirms whether an electronic transmission was successful or contained errors or warnings. Specific information about this requirement is included in Publication 97 and in the mailer's PMEM agreement.

2.7.7 Form 3152-E for Postage Payment

Form 3152-E is presented with each mailing. There is no postage affixed to the mailpieces and no postage statement presented with mailings. Postage payment is completed by electronic withdrawal of funds from a mailer's USPS Corporate Account. Form 3152-E must include the following information:

a. Number of pieces in the mailing.

b. Total weight of pieces in the mailing.

c. Total postage and extra service fees, if applicable, for the mailing.

d. USPSCA number.

e. Electronic file number from header record positions 4-25.

f. Mailer signature.

g. Date of mailing.

2.8 Applications, Agreement Renewals, Modifications, Suspensions, and Cancellations

2.8.1 Applications

[1-26-14] Mailers must apply to use a PMEM system by completing the application in Publication 97. The application must be sent to the USPS sales representative at the Post Office where the items will be accepted as mail. After the application and other documentation has been received and reviewed, the application and Form 1357-S is faxed to Product Information, Product Requirements, USPS Headquarters. This office will send the contact page of the application to the Postal NCSC USPS Tracking Office. The USPS Tracking Office will send a test kit to the applicant via electronic mail to test the electronic file transmission accuracy. The application for PMEM must be accompanied by the following:

a. A completed Form 1357-S.

b. A copy of Form 5639 showing that a USPS Corporate Account has been established.

c. A Mailer ID for each mailing location.

d. Sample copies of a verification manifest created from the mailer's PMEM software.

e. A PMEM label sample.

f. A price matrix, if applicable.

2.8.2 Approval

A temporary service agreement will be issued by the district marketing manager through the Business Mail Entry Office for 90 days at the location where the mailings will be verified and accepted when a review of the mailer's application and mailing operation indicates the mailer meets the eligibility requirements for entry of Priority Mail Express items using a PMEM system. Prior to the end of the 90 day temporary agreement the district business mail entry manager will conduct a final review to ensure that the system continues to meet standards. Upon a successful review, the district Customer Sales and Service manager gives final approval of the PMEM system. Publication 97-A, Priority Mail Express Manifesting Implementation and Administration Guide, outlines the specific responsibilities of the various USPS departments in approval process.

2.8.3 Denial

If an application for PMEM is denied by the district marketing manager, the denial is effective 15 days from the mailer's receipt of the notice unless a written appeal is filed within that time to the Business Mailer Support manager, USPS Headquarters, who issues the final agency decision on the application.

2.8.4 Changes, Additions, or Modifications to the Service Agreement

If a mailer proposes to change the method of presenting or documenting mailings from the method specified in the agreement, or the mailer is no longer able to comply with the standards that apply to the authorization, the mailer must immediately notify the district marketing manager.

2.8.5 Authorization Period

PMEM agreements remain in effect until such time as the district manager or the mailer cancels the agreement. If Postal Service periodic reviews or mailer supplied information demonstrates a need for modification, the agreement will be modified with concurrence by the district manager and the mailer.

2.8.6 USPS Suspension

The district Customer Service and Sales manager may suspend a PMEM agreement at any time, pending review, when there is an indication that postal revenue is not fully protected. The district Customer Service and Sales manager will notify the mailer of the decision in writing. The suspension becomes effective upon the mailer's receipt of the notification.

2.8.7 USPS Cancellation

The district Customer Service and Sales manager may cancel a PMEM agreement upon 15 days notice if:

a. The mailer fails to provide a manifest with correct data.

b. The required quality control procedures described in the PMEM agreement are not properly performed.

c. The PMEM does not comply with USPS requirements.

d. Mailings are presented that are not properly prepared or paid.

e. No Priority Mail Express manifest mailings are presented for more than 6 months (unless approved by the Business Mailer Support manager).

f. The mailer has relocated or has changed ownership without notification.

g. The 2-year renewal review reveals that the PMEM agreement should no longer be authorized or the mailer is not complying with the agreement.

2.8.8 Cancellation Notice and Appeal

The cancellation takes effect 15 days from the mailer's receipt of the notice unless, within that time, the mailer files a written appeal with the Business Mailer Support manager. The appeal must present additional information explaining why the PMEM agreement should not be canceled. The Business Mailer Support manager will issue the final agency decision.

2.9 Electronic Verification System

[7-28-14] The Electronic Verification System (eVS) is an electronic manifest mailing system that allows mailers to document and pay postage and extra services fees by transmitting electronic files to the Postal Service without generating paper manifests, postage statements, or clearance documents. Additional information on eVS can be found online at *ribbs.usps.gov* and in Publication 205, *Electronic Verification System (eVS) Business and Technical Guide*.

3.0 Optional Procedure Mailing System

[7-28-14] An Optional Procedure Mailing System is a method of verifying and accepting First-Class Mail, Standard Mail, Package Services, or Parcel Select paid by permit imprint. Mailings may consist of identical-weight or nonidentical-weight

pieces. The Optional Procedure Mailing System reviews a mailer's financial, production, and other business records in lieu of standard weight verification procedures. Postage verification is normally completed by a USPS audit of business records kept by the mailer. A USPS audit is designed to detect underpayment of postage. The burden rests with the mailer to prove any overpayment of postage. Additional information on Optimal Procedure Mailing System ccan be found online at *ribbs.usps.gov* and in Publication 407, *Optional Procedure (OP) Mailing System*.

4.0 Alternate Mailing System

4.1 Basic Information

4.1.1 Purpose

An Alternate Mailing System (AMS) provides for other methods of accepting permit imprint mail, not established in 2.0, or 3.0, that show proper postage payment and mail preparation without verification by weight.

4.1.2 Postage Adjustment

Underpayments identified during USPS verification may require a postage adjustment. Verification samples are considered to be representative of the entire mailing and postage adjustment calculations are applied to the total mailing. The total corrected postage for the entire mailing is deducted from the mailer's permit imprint advance deposit account.

4.2 Authorization

4.2.1 Procedure

A mailer may request authorization to pay postage by an AMS by submitting a written request to the postmaster at the office of mailing. The request must include a complete description of the types of matter to be mailed, the proposed method of paying postage, the proposed method to determine correct mail preparation, and a statement of the reasons for requesting the alternate system. The USPS may review the mailer's operation before ruling on the application.

4.2.2 Conditions

The conditions of authorization are:

a. Authorization to use AMS must benefit the USPS.

b. Authorization to use AMS must include a signed AMS authorization letter (or previously-approved service agreement).

c. An AMS authorization or agreement must specify the terms and conditions of the AMS.

d. All postage must be paid by permit imprint unless otherwise permitted in writing by the Business Mailer Support manager.

e. There must be no additional cost to the USPS for an AMS beyond the costs of current mail acceptance procedures for the mail in question.

f. The mailer must implement a quality control program that ensures proper mail preparation and accurate documentation, subject to USPS approval. Theauthorization or service agreement must include details of this program.

4.2.3 Business Mailer Support Action
The Business Mailer Support manager approves or denies a written request for AMS.

4.2.4 Approval
If the application is approved, an authorization letter (or previously-approved service agreement) is provided to the mailer.

4.2.5 Authorization Period
Authorizations remain in effect until such time as the Business Mailer Support manager or the mailer cancels the authorization or agreement. If Postal Service periodic reviews or mailer supplied information demonstrates a need for modification, then the authorization or service agreement will be modified with concurrence by the Business Mailer Support manager and the mailer.

4.2.6 Denial
If the application is denied the mailer may file a written appeal within 15 days from the receipt of the notice, including additional evidence explaining why the AMS request should be approved, to the vice president, Mail Entry and Payment Technology, USPS Headquarters, who reviews the appeal and issues the final agency decision.

4.2.7 Revocation
The Business Mailer Support manager may revoke an AMS authorization if the mailer:

a. Provides incorrect data for mailings and appears unable or unwilling to correct all problems.

b. Is not conducting required quality control procedures.

c. No longer meets the criteria established by standard or the AMS.

d. Does not present mailings under AMS for more than 6 months (except under the authorization or service agreement).

e. Continues to present mailings improperly prepared or mailings without correct postage.

4.2.8 Notice of Revocation
After a revocation notice is issued, the mailer and the USPS decide on the corrective actions and set up an implementation schedule, after which the USPS reexamines the mailer's system. Failure to correct identified problems is sufficient grounds to revoke a mailer's AMS authorization.

4.2.9 Appeal
Revocation proceeds if the mailer is unable or unwilling to correct the discrepancies found. The mailer may file a written appeal within 15 days from the date of receipt of the notice, which includes evidence explaining why the AMS authorization should not be revoked. The appeal must be filed with the Business Mailer Support manager

for referral to the vice president, Mail Entry and Payment Technology, USPS Headquarters, who issues the final agency decision. The mailer may continue to present mail under the AMS pending a decision on appeal. The revocation decision takes effect 15 days after receipt by the mailer.

5.0 First-Class Mail or Standard Mail Mailings With Different Payment Methods

5.1 Basic Provisions

5.1.1 General

After specific USPS authorization, a mailer may prepare separate First-Class Mail or Standard Mail letter-size automation price mailings that each contain pieces paid with more than one of the three authorized methods of postage payment (permit imprint, meter stamp, or precanceled stamp) or that contain pieces having different prices of postage affixed or multiple ounces of First-Class Mail permit imprint mail or nonidentical-weight permit imprint mail. For this standard, *mailer* or *presenter* is the entity preparing the combined mailing and presenting it to the USPS. All standards applying to each method of payment apply in a combined mailing, unless excepted below.

5.1.2 Postage Payment

Postage that is due to the USPS for permit imprint mail and additional postage for postage-affixed pieces is paid through the mailer's advance deposit account.

5.1.3 Value Added

To request value added refunds of postage overpayments for the metered part of combined mailings, see 604.9.0.

5.1.4 Mailer Processing

The mailer must have an automated mailing system that can be shown to correctly produce automation price letter-size mailings under the applicable standards and accurately compute and document the postage due.

5.1.5 Authorization Process

To be authorized to prepare automation price combined letter-size mailings, a mailer must submit a written request to the postmaster serving the mailer’s production plant. This request must:

a. Identify the postage payment methods to be combined, the prices of postage to be affixed to precanceled stamped or metered pieces, and, for First-Class Mail, the weight increments of pieces to be combined.

b. Describe all steps in the automated mailing system to be used to prepare combined mailings. Include a flow chart showing how jobs are handled from the time received from clients or other departments through the time the combined mailing is presented to the Post Office for verification and acceptance.

c. Include samples of all reports that the mailing system can generate. Number and annotate samples to describe step-by-step how the data are obtained and how each data element is supported and can be verified. Describe at which step in the mailing operation the reports may be generated, and how the reports relate to each other and to the preparation of postage statements.

d. Describe how rejects are handled during mail preparation.

e. Describe in detail internal quality control procedures that ensure that mailings are properly prepared, that postage statement and supporting data are accurate, and that correct postage is paid. Submit copies of quality control instructions and checklists used.

5.1.6 On-Site Review

The USPS examines the mailer's operation as part of the application process. During the on-site review, the mailer must:

a. Produce a controlled test mailing with supporting documentation.

b. Show that internal quality control procedures are satisfactorily administered.

c. Show that the mailing system provides acceptable documentation by which the USPS can verify postage statement data.

5.1.7 Interim Authorization

If the mailer meets standards, the USPS grants a 90-day interim authorization to prepare combined mailings. During this time, USPS monitors the mailer's system to ensure continued compliance with all applicable standards.

5.1.8 Final Authorization

At the end of the 90-day interim authorization, if the mailer's program meets all applicable standards, Business Mailer Support prepares a detailed authorization for the mailer to follow in preparing combined mailings. The mailer must give advance written notice to Business Mailer Support regarding any planned changes to the system used to prepare combined mailings.

5.1.9 Authorization Period

Authorizations remain in effect until such time as the Business Mailer Support manager or the mailer cancels the authorization or agreement. If Postal Service periodic reviews or mailer supplied information demonstrates a need for modification, then the authorization or service agreement will be modified with concurrence by the Business Mailer Support manager and the mailer.

5.1.10 Denial

If an application is denied, the mailer may, within 15 days from receipt of the notice, file a written appeal, including additional evidence explaining why the request should be approved, to the vice president, Mail Entry and Payment Technology, USPS Headquarters, who issues the final agency decision.

5.1.11 Suspension

The Business Mailer Support manager may suspend a combined mailing system authorization or agreement at any time, pending investigation, if the manager finds that postage is not being fully paid or mail is not being prepared according to standards. The decision to suspend the agreement may be appealed to the vice

president, Mail Entry and Payment Technology, USPS Headquarters, within 15 days of the receipt of the notice, by submitting a written appeal with explanation. The suspension remains in effect during the appeal. A suspension is ended when the mailer comes into compliance.

5.1.12 Cancellation by USPS

The USPS may cancel an authorization to prepare combined mailings at any time if the mailer:

a. Provides misleading or incorrect data to avoid payment of postage.

b. Makes no combined mailings under the authorization (or previously-approved agreement) during any consecutive 12-month period.

c. Fails to comply with applicable standards or terms of the authorization (or agreement), including required quality control procedures, and does not make changes to comply after USPS notification.

5.1.13 Cancellation Procedure

If the USPS decides to cancel an authorization, cancellation becomes effective 15 days from the mailer's receipt of the notice, unless the mailer files a written appeal within that time with the Business Mailer Support manager. The appeal must include additional information explaining why the combined mailing authorization should not be canceled. If the manager denies the appeal, both the appeal and the additional information are sent to the vice president, Mail Entry and Payment Technology, USPS Headquarters, who issues the final agency decision.

5.1.14 Cancellation by Mailer

The mailer may cancel an authorization to prepare combined mailings at any time by notifying the administering Post Office in writing.

5.2 Postage

5.2.1 Metered Pieces—First-Class Mail

Metered pieces in a combined mailing must bear postage for the first ounce at the Presorted price or at an automation price for which the pieces are eligible and, if applicable, the full amount of postage due for additional ounces. Additional postage due for metered pieces in a combined mailing is deducted from the mailer's postage due advance deposit account. Full postage at single-piece First-Class Mail prices must be paid on accompanying single-piece price mail using one of the methods under 134.1.0. Additional preparation to verify postage due may be required by the USPS.

5.2.2 Metered Pieces—Standard Mail

Metered pieces in a combined mailing must bear postage at a Presorted or automation price for which the pieces are eligible. Additional postage due for metered pieces in a combined mailing is deducted from the mailer's postage due advance deposit account. Full postage at single-piece First-Class Mail prices must be paid on accompanying single-piece price mail using one of the methods under 243.3.0, 705.5.0, and 134.1.0. Additional preparation to verify postage due may be required by the USPS.

5.2.3 Precanceled Pieces—First-Class Mail

Pieces with precanceled stamps in a combined mailing must not weigh more than 1 ounce and must bear postage in any denomination of precanceled stamps permitted in a Presorted or automation price mailing. Additional postage due for precanceled stamp pieces in a combined mailing is deducted from the mailer's postage due advance deposit account. Full postage at the single-piece First-Class Mail price must be paid on accompanying single-piece price mail using one of the methods under 134.1.0. Additional preparation to verify postage due may be required by the USPS.

5.2.4 Precanceled Pieces—Standard Mail

Pieces with precanceled stamps in a combined mailing must bear postage in any denomination of precanceled stamp permitted in an automation price mailing. Nonprofit postage may appear only on pieces in a Nonprofit price mailing that are eligible for and claimed at a Nonprofit price. Additional postage due for precanceled stamp pieces in a combined mailing is deducted from the mailer's postage due advance deposit account. Full postage at single-piece First-Class Mail prices must be paid on accompanying single-piece price mail using one of the methods under 243.3.0, 243.5.0, or 134.1.0. Additional preparation to verify postage due may be required by the USPS.

5.2.5 Permit Imprint Pieces—First-Class Mail and Standard Mail

Pieces in a combined mailing may bear the permit imprint of the mailer or the mailer's clients. Postage for the permit imprint part of a combined mailing must be paid from the mailer's permit imprint advance deposit account. Postage is deducted only from this account, regardless of the permit numbers or company permit imprints on pieces in a combined mailing. Full postage at single-piece First-Class Mail prices must be paid on accompanying single-piece price mail using one of the methods under 134.1.0 and, for Standard Mail, 243.3.0 and 243.5.0. Additional preparation to verify postage due may be required by the USPS.

5.2.6 Single-Piece Price Mail

With USPS approval, trays of single-piece price mail may be placed on the origin SCF pallet (First-Class Mail), or the mixed NDC pallet (Standard Mail), after USPS verification is completed.

5.3 Producing the Combined Mailing

5.3.1 Mailer Quality Control

Before merging different pieces into a combined presorted mailing, the mailer must have quality control procedures to ensure that:

a. Meter dates are correct.

b. Meter impressions are legible.

c. Permits and licenses are current at office of mailing.

d. In First-Class Mail mailings, full postage on 2-ounce and 3-ounce metered and precanceled stamped pieces is affixed for the ounces in addition to postage for the first ounce at a price acceptable for inclusion in the mailing.

e. In Standard Mail mailings, full postage is affixed at a price acceptable for inclusion in the mailing.

f. Barcodes meet all applicable standards.

g. Mailings are prepared under the relevant standards.

h. Source mailing information (on client, job, or segment) is entered accurately into the automated mailing system.

i. When markings are applied by an MLOCR, they properly show the applicable identifier/price code described in 5.3.2 that specifies the product month designator, NCOALinkMPE system identifier, the method of postage payment, and the price of postage affixed for metered and precanceled stamp mail or other postage information for permit imprint mail. These markings must be linked by the computer system to the price entered by the mailer when the pieces are run through the MLOCR.

5.3.2 Price and Postage Marking

The following markings must be applied to each piece in the mailing when markings are applied by an MLOCR. These seven-character markings provide the automation price marking information and additional information including the product month designator, MASS system identifier, manufacturer code, and price marking information. The product month designator is the first character position and represents the product month of the USPS ZIP+4 Product installed with the system's lookup engine responsible for the ZIP+4 assignment. Each product month is designated by a character "A" through "L" (with "A" meaning January, "B" meaning February, etc.). The MASS System Identifier is characters 2 through 4 and represents the certified system identifier responsible for the ZIP+4 assignment. There is a one-to-one relationship between the certified system serial number and the assigned identifier. The manufacturer code is the fifth character and is assigned at the manufacturer's discretion with one exception: the character "Z" is assigned when the mailpiece contains a delivery point barcode in the address block and the MLOCR does not perform a lookup but simply reproduces the address block barcode. The price marking is represented in the last two characters according to the chart below. The applicable marking must appear on each mailpiece in one of the locations authorized under 202 for letters or 202 for flats.

a. First-Class Mail:

	PRICE MARKING			
	Letters		Flats	
PRICE AND POSTAGE CATEGORY	Basic & POSTNET	Full Service	Basic & POSTNET	Full Service
Barcoded 1 ounce Permit Imprint	P1	P1	F1	F1
Barcoded 2 ounce Permit Imprint	P2	P2	F2	F2
Barcoded 3 ounce Permit Imprint	P3	P3	F3	F3
Barcoded 4 ounce Permit Imprint	P4	P4	F4	F4
Barcoded 5 ounce Permit Imprint			F5	F5
Barcoded 6 ounce Permit Imprint			F6	F6
Barcoded 7 ounce Permit Imprint			F7	F7

705.5.3.2

	PRICE MARKING			
	Letters		Flats	
PRICE AND POSTAGE CATEGORY	**Basic & POSTNET**	**Full Service**	**Basic & POSTNET**	**Full Service**
Barcoded 8 ounce Permit Imprint			F8	F8
Barcoded 9 ounce Permit Imprint			F9	F9
Barcoded 10 ounce Permit Imprint			F0	F0
Barcoded 11 ounce Permit Imprint			FA	FA
Barcoded 12 ounce Permit Imprint			FB	FB
Barcoded 13 ounce Permit Imprint			FC	FC
Promotional Postage Meter Affixed	PL	PL	PF	PF
Barcoded 5-Digit Meter Postage Affixed	5B	5F	B5	X5
Barcoded 3-Digit Meter Postage Affixed	3B	3F	B3	X3
Barcoded AADC/ADC Meter Postage Affixed	AB	AF	BA	XA
Barcoded Mixed AADC/ADC Meter Postage Affixed	MB	MF	BM	XM
Presorted Meter Postage Affixed	MP			
Precanceled $0.15 Stamp Affixed (card)	S1	S1		
Precanceled $0.25 Stamp Affixed	S2	S2		

b. Standard Mail (letters only):

PRICE AND POSTAGE CATEGORY	PRICE MARKING	
	BASIC & POSTNET	FULL SERVICE
Barcoded Regular Permit Imprint	PI	PI
Barcoded Nonprofit Permit Imprint	NI	NI
Regular Promotional Postage Meter Affixed	PR	PR
Nonprofit Promotional Postage Meter Affixed	PN	PN
Promotional Postage Meter Affixed	PR	PN
Barcoded 5-Digit Meter Regular Postage Affixed	R5	RF
Barcoded 5-Digit Meter Nonprofit Postage Affixed	N5	NF
Barcoded 3-Digit Meter Regular Postage Affixed	R3	RT
Barcoded 3-Digit Meter Nonprofit Postage Affixed	N3	NT
Barcoded AADC Meter Regular Postage Affixed	RA	RD
Barcoded AADC Meter Nonprofit Postage Affixed	NA	ND
Barcoded MXD AADC Meter Regular Postage Affixed	RM	RX
Barcoded MXD AADC Meter Nonprofit Postage Affixed	NM	NX
Presorted AADC Meter Regular Postage Affixed	R8	
Presorted AADC Meter Nonprofit Postage Affixed	N8	
Presorted Basic Meter Regular Postage Affixed	R9	
Presorted Basic Meter Nonprofit Postage Affixed	N9	
Precanceled Regular Rate Stamp Affixed ($.10)	SR	SR
Precanceled Nonprofit Stamp Affixed ($.05)	SN	SN

5.3.3 Merging Methods and Documentation

During the initial count of each source mailing (i.e., the quantity of mail originated by each of the mailer's clients) by the mailer's automated mailing system, pieces must be grouped by payment method (and, within each for First-Class Mail, by ounce increment). All pieces within each postage-affixed group must have the same amount of postage affixed (for First-Class Mail, the same amount of postage must be affixed for the first ounce). The mailer must keep records of each source that was merged in the combined mailing to allow the USPS to identify each source, the number of pieces by postage payment method, and, within each, by ounce increment (for First-Class Mail), or by amount of postage affixed (for Standard Mail). The mailer must keep these records (in the form of computer-generated printouts or computer media approved by Business Mailer Support) in a central location for 90 days after the mailing date of the combined mailing.

5.3.4 Rejected Pieces

Pieces rejected for any reason by the mailer's automated sorting system and pulled out of the combined mailing stream must be identified by the mailer, specifically accounted for in documentation, and:

a. If postage-affixed, bear postage or have additional postage affixed to equal a price no lower than:

1. For First-Class Mail, the correct Presorted First-Class Mail.
2. For Standard Mail, the correct 5-Digit or AADC (as applicable) Presorted Standard Mail price for letters.

b. If paid by permit imprint, separately presented to the USPS for verification of postage.

5.4 Documentation

5.4.1 Submission

Mailers are required to submit or generate the following reports:
For each First-Class Mail or Standard Mail combined mailing, the mailer must provide these materials:

a. For each postage payment method, a complete and accurate postage statement endorsed “Combined Mailing” at the top.

1. A separate Form(s) 3553.
2. The USPS qualification report in standardized format detailing by ZIP Code the number of pieces qualifying for each price by presort level. If plant-verified drop shipment (PVDS) is used for Standard Mail, a separate USPS qualification report must be generated for each entry destination.
3. The USPS Summary ZIP Destination report in one of two standardized formats that lists by tray destination and price category: each mail category, postage payment type, weight, and price affixed (report all postage affixed First-Class Mail pieces as weighing one ounce); number of pieces; dollar amount of postage affixed to those pieces; cumulative postage affixed; total postage; net postage due; cumulative postage due; and a running total of the number of pieces. If plant-verified drop shipment (PVDS) is used for Standard Mail, a separate USPS Summary ZIP Destination report must be generated for each entry destination. This report is not required if there is only one metered price in the mailing. Business Mailer Support may authorize submission of only portions of this report.
4. The USPS Postage Summary in a standardized format. This report shows, by type of payment method, the total postage claimed for all pieces in the mailing by price level and the total postage affixed by price level. It also shows a grand total summary of postage affixed, postage claimed, and total postage due. If plant-verified drop shipment (PVDS) is used for Standard Mail, a separate USPS Postage Summary report must be generated for each entry destination.
5. Other documentation that may be required by other standards for the price claimed.

b. The USPS Customer Mail Report must be generated for each mailing but is required to be submitted to the USPS only when requested by USPS personnel for the resolution of errors (shortpaid and potential MLOCR profiling) detected in a specific mailing. The Customer Mail Report must list each customer by name and provide the following information about their mail: price affixed, mail

category including postage payment type, weight, total postage, postage affixed, number of pieces, cumulative number of pieces, number of pieces rejected, and total pieces fed.

5.4.2 Permit Imprint

To prepare the postage statement for permit imprint pieces, the mailer multiplies the number of such pieces qualifying for each price level (and, for First-Class Mail, in each weight increment) (as documented by the mailer) by the corresponding price. The result is the net postage due for the permit imprint part of the combined mailing. If the mailing contains nonidentical-weight permit imprint pieces, the postage statement must be so annotated.

5.4.3 Postage Affixed

In completing the separate postage statements for postage-affixed pieces:

a. Multiply the number of pieces at each price level (which, for First-Class Mail, are treated as weighing 1 ounce or less, regardless of actual weight) by the corresponding price of postage. The product is the postage due before adjustments are made for the value of postage affixed to those pieces.

b. Multiply the amount of postage (or, for First-Class Mail only, first ounce postage) affixed by the number of pieces at each amount, to determine the total postage already paid.

c. Set the amount paid against the amount due to find the postage to be paid by or to the mailer for the postage-affixed pieces.

5.4.4 Reporting Results

Any additional postage due is paid through the mailer's advance deposit account for combined mailings. A "value added" refund of any overpayment of meter postage may be requested under 604.9.0.

6.0 Combining Mailings of Standard Mail, Package Services, and Parcel Select Parcels

6.1 Basic Standards for Combining Parcels

6.1.1 Basic Standards

Standard Mail parcels, Parcel Select Lightweight parcels, Package Services parcels, and Parcel Select parcels in combined mailings must meet the following standards:

a. Each parcel in a combined mailing is subject to the applicable content and price eligibility standards for the price claimed.

b. Mailers must be authorized under 6.1.4.

c. Mailers must pay all applicable presort mailing and destination entry mailing fees.

d. Minimum volume requirements for Standard Mail, Parcel Select, Presorted Bound Printed Matter, Presorted Library Mail, and Presorted Media Mail must be met separately and are based solely on the quantity of pieces eligible for

each price at the required presort level. Pieces claimed at other prices in the same sack or on the same pallet do not count towards these minimum volume requirements.

6.1.2 Postage Payment

Mailers must pay postage for all pieces with a permit imprint at the Post Office serving the mailer's plant using an approved postage payment system. The applicable system authorization must include procedures for combined mailings approved by Business Mailer Support. Types of permissible postage payment systems are as follows:

a. Manifest Mailing System (MMS) under 2.0. Mailers may document and pay postage using the Electronic Verification System (eVS) under 2.9.

b. Optional Procedure (OP) Mailing System under 3.0.

c. Alternate Mailing System (AMS) under 4.0.

6.1.3 Documentation

Mailers must prepare separate postage statements for Standard Mail, Package Services, and Parcel Select pieces for each of the mailings in the combined mailing. At the time of mailing, mailers must provide all postage statements and a Business Mailer Support-approved manifest prepared according to 2.0 and this section. Presort documentation is required as applicable for each price claimed if the manifest does not list pieces in presort order.

6.1.4 Authorization

A mailer who wants to present combined parcel mailings must submit a written request to Business Mailer Support (See 608.8.1 for address). The request must show the mailer's name and address, the mailing office, evidence of authorization to mail under 2.0, procedures for combined mailing, the expected date of first mailing, a sample of the required manifest, and a sample USPS Qualification report. Business Mailer Support will review documentation and provide written authorization, which will remain in effect until such time as the Business Mailer Support manager or the mailer cancels the authorization. A mailer may terminate an authorization at any time by written notice to the postmaster of the office serving the mailer's location. Business Mailer Support may terminate an authorization, by written notice, if the mailer does not meet standards or the terms of the authorization.

6.2 Combining Parcels—DNDC Entry

Mailers may combine Standard Mail machinable parcels, Standard Mail Marketing parcels weighing 6 or more ounces, and Parcel Select Lightweight machinable parcels with Package Services and Parcel Select machinable parcels for entry at a NDC when authorized by the USPS under 6.1.4.

6.2.1 Eligible Prices

Combined parcels may be eligible for Standard Mail, Standard Post, Parcel Select Lightweight, Parcel Select DNDC/ASF, single-piece and Presorted Media Mail, single-piece and Presorted Library Mail, Bound Printed Matter DNDC, and Nonpresorted and Presorted Bound Printed Matter prices. Mailers may not combine Carrier Route Bound Printed Matter with other parcels.

6.2.2 Additional Standards

Standard Mail machinable parcels, Standard Mail Marketing parcels (6 ounces or more), Parcel Select Lightweight machinable parcels, and Package Services and Parcel Select machinable parcels prepared for DNDC entry must meet the following conditions in addition to the basic standards in 6.1:

a. Each piece in a combined Standard Mail, Package Services, and Parcel Select mailing must meet the criteria for machinable parcels in 201.1.0; or for Standard Mail Marketing parcels the criteria in 201.2.4.

b. Parcel Select machinable parcels must bear a barcode under 708.5.0 for the ZIP Code of the delivery address.

c. Parcels may be claimed at single-piece, Presorted, and DNDC/ASF destination entry prices as applicable.

d. Mailers must prepare all parcels in sacks under 6.2.3, or on pallets or in pallet boxes under 8.0, to achieve the finest level of sortation.

e. Mailers must deposit combined machinable parcels at NDCs or ASFs (see Labeling Lists L601 and L602) under applicable standards in 17.0.

6.2.3 Sacking and Labeling

Preparation sequence, sack size, and labeling:

a. *5-digit scheme,* optional, but required for Standard Mail 5-digit price eligibility, 10-piece or 20-pound minimum; labeling:

   1. Line 1: use L606.
   2. Line 2: “STD/PSVC MACH 5D SCH.”

b. *5-digit,* optional, but required for Standard Mail 5-digit price eligibility, 10-piece or 20-pound minimum; labeling:

   1. Line 1: use city, state, and 5-digit ZIP Code on mail (see 8.6.4 for overseas military mail).
   2. Line 2: “STD/PSVC MACH 5D.”

c. *ASF,* optional, allowed only for mail deposited at an ASF to claim DNDC price, 10-piece or 20-pound minimum; labeling:

   1. Line 1: use L602, Column B.
   2. Line 2: “STD/PSVC MACH ASF.”

d. *NDC,* required, 10-piece or 20-pound minimum; labeling:

   1. Line 1: use L601, Column B.
   2. Line 2: “STD/PSVC MACH NDC.”

e. *Mixed NDC,* required, no minimum; labeling:

   1. Line 1: “MXD” followed by L601 Column B information for NDC serving 3-digit ZIP Code prefix of entry Post Office.
   2. Line 2: “STD/PSVC MACH WKG.”

6.3 Combining Parcels—Parcel Select ONDC Presort, NDC Presort, DSCF, and DDU Prices

6.3.1 Qualification

Combination requirements for specific discounts and prices are as follows:

a. When claiming Parcel Select ONDC or NDC Presort discounts, Parcel Select machinable parcels may be combined with Standard Mail and Parcel Select Lightweight machinable parcels, Standard Mail Marketing parcels weighing 6 ounces or more, and Package Services machinable parcels under 6.3 only if the parcels are palletized and each pallet or pallet box contains a 200-pound minimum.

b. When claiming DSCF prices, Parcel Select, Parcel Select Lightweight, Standard Mail, and Bound Printed Matter parcels may be combined with other Package Services parcels under 6.3.

c. All Standard Mail parcels may be combined with Package Services, Parcel Select, and Parcel Select Lightweight parcels prepared for DDU prices under 6.3.

6.3.2 Preparation and Prices

Combined parcels must be prepared as follows:

a. *Minimum Mailing Volume.* Separate minimum mailing volume requirements must be met for Standard Mail parcels, Package Services, and for Parcel Select parcels.

b. *Parcel Select or Bound Printed Matter Qualifying for DSCF Prices.* Mailers must prepare the combined mailings under the applicable 5-digit scheme and 5-digit sack requirements in 255.4.2 or the applicable 5-digit scheme and 5-digit pallet requirements in 8.0 for the Parcel Select DSCF prices. All other requirements for Parcel Select DSCF prices, Parcel Select Lightweight prices and Standard Mail prices, as applicable, must be met.

   1. If sacked under 255.4.2, the minimum requirement of seven pieces per sack must be met with only Package Services and Parcel Select parcels. After the minimum sack volume has been met, Standard Mail parcels and Parcel Select Lightweight parcels may be included in the sack or in overflow sacks.

   2. If palletized under the option to prepare 5-digit scheme or 5-digit pallets when there are at least 50 pieces and 250 pounds per pallet, this pallet minimum must be met with only Package Services and Parcel Select parcels. After the minimum pallet volume has been met, Standard Mail parcels and Parcel Select Lightweight parcels may be included on the pallet or in overflow sacks.

   3. If palletized under the alternate pallet preparation where no pallet may contain fewer than 35 pieces and 200 pounds provided the average number of pieces on pallets qualifying for the DSCF price is at least 50, Standard Mail parcels or Parcel Select Lightweight parcels may not be combined with Package Services and Parcel Select parcels.

4. If palletized under the option to prepare 5-digit scheme or 5-digit pallets under the 36-inch-high (mail only) pallet minimum, any combination of Standard Mail, Parcel select Lightweight, Package Services, and Parcel Select parcels may be used to meet the minimum pallet height requirement.
5. Line 2 of 5-digit scheme pallet and sack labels must read: "STD/PSVC MACH 5D SCH." Line 2 of 5-digit pallet and sack labels must read: "STD/PSVC MACH 5D."
6. Standard Mail parcels and Parcel Select Lightweight parcels are eligible for presorted prices according to 243 and 253.4.4 respectively.

c. Parcel Select Qualifying for ONDC Presort or NDC Presort Prices. Mailers must prepare the combined mailings under the NDC pallet requirements in 8.0 for machinable parcels at Parcel Select ONDC Presort or NDC Presort prices. All other requirements for Parcel Select ONDC Presort or NDC Presort prices, Parcel Select Lightweight prices and Standard Mail prices must be met. The following additional requirements apply:

1. The minimum height requirement for each pallet or pallet box on a pallet may be met using any combination of Standard Mail, Parcel Select Lightweight, Package Services, and Parcel Select parcels.
2. Line 2 of NDC pallet box labels must read: "STD/PSVC MACH NDC."

d. Package Services, Parcel Select, Standard Mail, and Parcel Select Lightweight parcels qualifying for DDU prices:

1. The combined mailings must be prepared under the applicable 5-digit scheme and 5-digit sack requirements in 245.4.0 or the applicable 5-digit scheme and 5-digit pallet requirements in 8.22 for the Parcel Select or Bound Printed Matter DDU prices.
2. Line 2 of 5-digit scheme container labels must read, "STD/PSVC PARCELS 5D SCH." Line 2 of 5-digit container labels must read, "STD/PSVC PARCELS 5D."

6.4 Combining Package Services, Parcel Select, and Standard Mail—Optional 3-Digit SCF Entry

6.4.1 Entry at Designated SCFs

Mailers may deposit pieces otherwise eligible for the Package Services, Parcel Select, Standard Mail, and Parcel Select Lightweight DNDC prices and the Standard Mail and Parcel Select Lightweight DSCF price at an SCF designated by the USPS for destination ZIP Codes listed in labeling list L607.

6.4.2 Qualification and Preparation

Parcel Select and Bound Printed Matter machinable parcels, Standard Mail parcels and Parcel Select Lightweight parcels, may be prepared for entry at designated SCFs under these standards:

a. Standard Mail and Parcel Select Lightweight parcels that weigh less than 2 ounces or that are tubes, rolls, triangles, and similar pieces may not be included.

b. Mailers must prepare pieces on 3-digit pallets or pallet boxes, or unload and physically separate the pieces into containers as specified by the destination facility.

c. Parcel Select and Bound Printed Matter parcels are eligible for the applicable DNDC entry price.

d. Standard Mail machinable parcels, Standard Mail Marketing parcels weighing 6 ounces or more, and Parcel Select Lightweight machinable parcels are eligible for the NDC presort level, DNDC price; Standard Mail Marketing parcels weighing less than 6 ounces and irregular Standard Mail and Parcel Select Lightweight parcels are eligible for the 3-digit presort level, DSCF price.

e. All pieces must be for delivery within the service area of the SCF where they are deposited by the mailer.

f. Postage on all zone-priced parcels deposited at the SCF is computed using the zone chart for that postal facility.

7.0 Combining Package Services and Parcel Select Parcels for Destination Entry

7.1 Combining Parcels—DSCF and DDU Entry

7.1.1 Qualification

Mailers may combine Package Services and Parcel Select parcels in 5-digit scheme and 5-digit sacks or on 5-digit scheme and 5-digit pallets for entry either at a destination sectional center facility (DSCF) or a destination delivery unit (DDU) when authorized by the USPS under 7.5. Mailers must pay all applicable fees for presort and drop shipment and must meet the minimum volume requirements for Presort prices and Parcel Select prices. Combined Package Services and Parcel Select mailings must meet the standards in 255.4.0 and 266.3.0 through 266.6.0, except as provided by this section.

7.1.2 Basic Standards

Package Services and Parcel Select parcels that qualify as machinable, nonmachinable, and irregular under 201 and meet the following conditions may be combined in 5-digit scheme and 5-digit sacks or 5-digit scheme and 5-digit pallets under these conditions:

a. Minimum volume requirements for Parcel Select, Presorted Bound Printed Matter, Presorted Library Mail, and Presorted Media Mail must be met separately before combining.

b. Postage must be paid via permit imprint under an approved manifest mailing system as provided in 3.0. For mailings presented under 7.0, mailers may document and pay postage using the Electronic Verification System (eVS) under 2.9.

c. All parcels must be prepared in sacks under 7.2 or on pallets under 7.3. For mail entered at the DSCF prices, pallet preparation is not permitted for 5-digit ZIP Codes that are unable to handle pallets. Refer to the Drop Ship Product

maintained by the National Customer Support Center (NCSC) (see 608.8.0 for address) to determine which 5-digit delivery facilities can handle pallets. If a DDU facility cannot handle pallets, and a mailer transports mail to the DDU facility on pallets, the driver will have to unload the pallets into a container specified by the delivery unit.

d. Pieces may be claimed at single-piece prices, Presorted prices, and destination entry prices under 7.2.1 or 7.1.6.

e. Separate postage statements must be prepared for each subclass and destination entry price as appropriate.

f. The deposit of combined Package Services and Parcel Select at a DSCF or DDU must be in accordance with applicable drop shipment standards.

7.1.3 Combined Parcels Prepared in Sacks—Price Eligibility

In addition to the applicable standards in 255.4.0 and 266.3.0 through 266.6.0 for destination entry Parcel Select and Package Services, the following standards apply for combined parcels prepared in sacks:

a. Parcel Select DSCF prices apply to parcels that are contained in 5-digit scheme and 5-digit sacks, each containing at least 10 pieces of any combination of Parcel Select and Package Services mail, or contained in overflow sacks under 7.2.2, provided all other requirements for the DSCF price in 253.3.0 and 255.4.2 are met. Parcel Select DDU prices apply to parcels that are contained in 5-digit scheme and 5-digit sacks, each containing at least 10 pieces of any combination of Parcel Select and Package Services mail, or contained in overflow sacks under 7.2.2, provided all other requirements for the DDU price in 253.3.0 and 255.4.1 are met.

b. Presorted Bound Printed Matter DSCF prices apply to parcels that are contained in 5-digit scheme and 5-digit sacks, each containing at least 10 pieces of any combination of Parcel Select and Package Services mail, or contained in overflow sacks under 7.2.2, provided all other requirements for the DSCF price in 266.3.0 through 266.6.0 are met. Presorted Bound Printed Matter DDU prices apply to parcels that are contained in 5-digit scheme and 5-digit sacks, each containing at least 10 pieces of any combination of Parcel Select and Package Services mail, or contained in overflow sacks under 7.2.2, provided all other requirements for the DDU price in 266.3.0 through 266.6.0 are met.

c. Presorted Library Mail 5-digit prices apply to parcels that are contained in 5-digit scheme and 5-digit sacks, each containing at least 10 pieces of any combination of Parcel Select and Package Services mail, or contained in overflow sacks under 7.2.2.

d. Presorted Media Mail 5-digit prices apply to parcels that are contained in 5-digit scheme and 5-digit sacks, each containing at least 10 pieces of any combination of Parcel Select and Package Services mail, or contained in overflow sacks under 7.2.2.

e. Single-piece price parcels that are contained in 5-digit scheme and 5-digit sacks, each containing at least 10 pieces of any combination of Parcel Select and Package Services mail, or contained in overflow sacks under 7.2.2, qualify for single-piece prices.

7.1.4 Sack Preparation

Only 5-digit scheme and 5-digit sacks may be prepared. Each sack of combined Parcel Select and Package Services mail must contain at least 10 pieces. One overflow sack containing fewer than 10 pieces is permitted per 5-digit scheme and 5-digit destination.

7.1.5 Sack Labeling

Sack labels must be prepared as follows:

a. *5-digit scheme,* optional; labeling:

   1. Line 1: use L606, Column B.

   2. Line 2: "PSVC PARCELS 5D SCH."

b. *5-digit,* labeling:

   1. Line 1: use city, state, and 5-digit ZIP Code destination of pieces.

   2. Line 2: "PSVC PARCELS 5D."

7.1.6 Combined Parcels Prepared on Pallets—Price Eligibility

In addition to the applicable standards in 255.4.0, and 266.3.0 through 266.6.0 for destination entry parcels, the following standards apply for combined parcels prepared on pallets:

a. Parcel Select DSCF prices apply to pieces that are prepared on 5-digit scheme and 5-digit pallets, each containing at least 50 pieces and 250 pounds or 36 inches of Parcel Select and Package Services mail, or contained in overflow sacks under 7.1.8, and deposited at a DSCF under 255.4.0. Parcel Select DDU prices apply to pieces that are prepared on 5-digit scheme and 5-digit pallets, each containing at least 50 pieces and 250 pounds or 36 inches of Parcel Select and Package Services mail, or contained in overflow sacks under 7.1.8, and deposited at a DDU under 255.4.0.

b. Presorted Bound Printed Matter DSCF prices apply to pieces that are prepared on 5-digit scheme and 5-digit pallets, each containing at least 50 pieces and 250 pounds or at least 36 inches of Parcel Select and Package Services mail, or contained in overflow sacks under 7.1.8, and deposited at a DSCF under 266.3.0 through 266.6.0. Presorted Bound Printed Matter DDU prices apply to pieces that are prepared on 5-digit scheme and 5-digit pallets, each containing at least 50 pieces and 250 pounds or at least 36 inches of Parcel Select and Package Services mail, or contained in overflow sacks under 7.1.8, and deposited at a DDU under 266.3.0 through 266.6.0.

c. Presorted Library Mail 5-digit prices apply to pieces that are prepared on 5-digit scheme and 5-digit pallets, each containing at least 50 pieces and 250 pounds or 36 inches of Parcel Select and Package Services mail, or contained in overflow sacks under 7.1.8.

d. Presorted Media Mail 5-digit prices apply to pieces that are prepared on 5-digit scheme and 5-digit pallets, each containing at least 50 pieces and 250 pounds or 36 inches of Parcel Select and Package Services mail, or contained in overflow sacks under 7.1.8.

e. Single-piece price parcels that are prepared on 5-digit scheme and 5-digit pallets, each containing at least 50 pieces and 250 pounds or 36 inches of Parcel Select and Package Services mail, or contained in overflow sacks under 7.1.8, qualify for single-piece prices.

7.1.7 Pallet Preparation

Only 5-digit scheme and 5-digit pallets may be prepared. Each 5-digit scheme and 5-digit pallet of combined Parcel Select and Package Services must contain at least: (1) 50 parcels and 250 pounds of mail, or (2) 36 inches of mail (excluding the height of the pallet). Pallets prepared using either minimum requirement may be combined in the same mailing.

7.1.8 Overflow Sacks

After filling pallets to a 5-digit scheme or 5-digit destination, any remaining pieces that do not meet the minimum pallet requirements may be prepared in 5-digit scheme or 5-digit overflow sacks. Overflow sacks must be labeled under 7.2.3.

7.1.9 Pallet Labeling

Pallet labels must be prepared as follows:

a. *5-digit scheme,* optional; labeling:

   1. Line 1: use L606, Column B.

   2. Line 2: “PSVC PARCELS 5D SCH.”

b. *5-digit,* labeling:

   1. Line 1: use city, state, and 5-digit ZIP Code destination of pieces.

   2. Line 2: “PSVC PARCELS 5D.”

7.2 Combining Parcel Select and Package Services Machinable Parcels for DNDC Entry

7.2.1 Qualification

Mailers may combine Parcel Select and Package Services machinable parcels for entry at a NDC when authorized by the USPS under 7.5. These parcels may be eligible for Parcel Select DNDC/ASF, single-piece and Presorted Media Mail, single-piece and Presorted Library Mail, Bound Printed Matter DNDC, and single-piece and Presorted Bound Printed Matter prices. Mailers may not combine Carrier Route Bound Printed Matter with other parcels.

7.2.2 Basic Standards

Parcel Select and Package Services parcels must meet the following conditions:

a. Each piece in a combined machinable parcels mailing must meet the criteria for machinable parcels in 201.1.0.

b. Each parcel in a combined machinable parcels mailing is subject to the applicable content and price eligibility standards for the price claimed.

c. Parcel Select machinable parcels must bear a barcode under 708.5.0 for the ZIP Code of the delivery address.

d. Postage must be paid via permit imprint under an approved manifest mailing system as provided in 3.0. For mailings presented under 7.0, mailers may document and pay postage using the Electronic Verification System (eVS) under 2.9.

e. Mailers must pay all applicable presort mailing and destination entry mailing fees.

f. Minimum volume requirements for Parcel Select, Presorted Bound Printed Matter, Presorted Library Mail, and Presorted Media Mail must be met separately and are based solely on the quantity of pieces eligible for each price at the required presort level. Pieces claimed at other prices in the same sack or on the same pallet do not count toward these minimum volume requirements.

g. Parcels may be claimed at single-piece, Presorted, and DNDC/ASF destination entry prices as applicable.

h. Mailers must prepare all parcels in sacks under 6.2.3, or on pallets or in pallet boxes under 8.0, to achieve the finest level of sortation.

i. Mailers must deposit combined machinable parcels at NDCs under applicable standards in 17.0.

7.2.3 Sacking and Labeling

Preparation sequence, sack size, and labeling:

a. *5-digit scheme,* optional,10-piece or 20-pound minimum; labeling:

   1. Line 1: use L606, Column B.
   2. Line 2: “PSVC MACH 5D SCH.”

b. *5-digit,* optional except for Bound Printed Matter, required for 5-digit price for Media Mail and Library Mail, 10-piece or 20-pound minimum; labeling:

   1. Line 1: use city, state, and 5-digit ZIP Code on mail (see 8.0 for overseas military mail).
   2. Line 2: “PSVC MACH 5D.”

c. *ASF,* optional, allowed only for mail deposited at an ASF to claim DNDC price, 10-piece or 20-pound minimum; labeling:

   1. Line 1: use L602, Column B. DNDC price eligibility is determined by 6.3.
   2. Line 2: “PSVC MACH ASF.”

d. *NDC,* required,10-piece or 20-pound minimum; labeling:

   1. Line 1: use L601, Column B. DNDC price eligibility is determined by 6.3.
   2. Line 2: “PSVC MACH NDC.”

7.2.4 Pallet Presort and Labeling

Mailers must prepare pallets in the sequence listed below and complete each required level before preparing the next optional or required level. Unless indicated as optional, all sort levels are required under the conditions shown. Destination entry

price eligibility applies only to Parcel Select (see 253.3.0 and 255.4.0) and Bound Printed Matter (see 266.3.0). Mailers may, at their option, prepare all machinable parcels for destination entry (see 7.0). Mailers must label pallets according to the Line 1 and Line 2 information listed below and under 8.0.

a. *5-digit scheme,* optional. Pallet may contain parcels for the same 5-digit scheme under L606. Pallets need not be prepared for all 5-digit scheme destinations. For 5-digit destinations not part of L606, or for which scheme sorts are not performed, prepare 5-digit pallets under 2.4. Labeling:

   1. Line 1: use L606, column B.
   2. Line 2: "PSVC MACH 5D," as applicable; followed by "SCHEME" (or "SCH").

b. *5-digit,* optional except for Bound Printed Matter, required for 5-digit price eligibility for Media Mail and Library Mail. Pallet must contain parcels only for the same 5-digit ZIP Code. Labeling:

   1. Line 1: use city, state, and 5-digit ZIP Code destination (see 8.0 for military mail).
   2. Line 2: "PSVC MACH 5D," as applicable.

c. *ASF,* required if claiming DNDC prices, otherwise optional. Not available for the Buffalo, NY ASF. Pallets must contain only parcels for the 3-digit ZIP Code groups in L602. Labeling:

   1. Line 1: use L602, column B.
   2. Line 2: "PSVC MACH ASF," as applicable.

d. *NDC,* required. Pallets must contain only parcels for the 3-digit ZIP Code groups in L601. Labeling:

   1. Line 1: use L601, column B.
   2. Line 2: "PSVC MACH NDC," as applicable.

7.3 Postage Payment

Postage for all pieces must be paid with permit imprint at the Post Office serving the mailer's plant under 2.0.

7.4 Documentation

Mailers must complete separate postage statements for each of the mailings contained within the combined mailing. At the time of mailing, mailers must provide all postage statements and a Business Mailer Support-approved manifest prepared according to 2.0 and this section.

7.5 Authorization

A mailer who wants to present combined parcel mailings must submit a written request to Business Mailer Support (See 608.8.1 for address). The request must show the mailer's name and address, the mailing office, evidence of authorization to mail under 2.0, procedures for combined mailing, the expected date of first mailing, a sample of the required manifest, and a sample USPS Qualification report. Business Mailer Support will review documentation and provide written authorization. Authorizations remain in effect until such time as the Business Mailer

Support manager or the mailer cancels the authorization or agreement. A mailer may terminate an authorization at any time by written notice to the postmaster of the office serving the mailer's location. Business Mailer Support may terminate an authorization, by written notice, if the mailer does not meet the standards or the terms of the authorization.

8.0 Preparing Pallets

8.1 Physical Characteristics

8.1.1 Standards

All pallets presented to the USPS, whether USPS-provided or mailer-provided, must meet the standards in 8.1.2 through 8.1.4. Mail on such pallets must meet the standards for the class and price claimed.

8.1.2 Construction

Pallets must be made of high-quality material that can hold loads equal to a gross weight of 2,200 pounds. Pallets must measure 48 by 40 inches and must allow four-way entry by forklift trucks and two-way entry by pallet jacks.

8.1.3 Securing Pallets

Except for stacked pallets under 8.3.1 and pallet boxes under 8.4.3, each loaded pallet of mail must be prepared to maintain the integrity of the mail and the entire pallet load during transport and handling using one of the following methods:

a. Securing with at least two straps or bands of appropriate material. Wire or metal bands, straps, buckles, seals, and similar metal fastening devices cannot be used.

b. Wrapping with stretchable or shrinkable plastic.

c. Securing with at least two straps or bands of appropriate material and wrapping with stretchable or shrinkable plastic. Wire and metal bands and straps, metal buckles, metal seals, and similar metal fastening devices cannot be used.

8.1.4 Nonconforming Mailer

The USPS informs any mailer or mailer’s agent who presents palletized mailings, including plant-verified drop shipment (PVDS), when the mailer’s pallets fail to meet basic pallet integrity and safety standards. After a mailer is notified and allowed to make changes to improve load integrity, if the mailer’s methods, or those of the mailer’s agent, do not work, the mailer is considered nonconforming. A nonconforming mailer must meet the specifications for nonconforming mailers for top-cap use, stacking of pallets, pallet box construction, and maximum height/tiers of trays in 8.2 through 8.5, respectively. A mailer is suspended from the pallet program if the mailer’s pallets continue to fail to meet the minimum load integrity levels after being notified and allowed to make changes.

8.2 Top Caps

8.2.1 Use

Top caps are used as follows:

a. Except as provided below, all pallets of sacks, trays, parcels, bundles of mail, or pallet boxes must be top-capped if the pallets are stacked two, three, or four tiers high when presented to the USPS for acceptance.

b. The top pallet need not be top-capped if the strapping or banding securing the stacked pallets together neither damages the mail on the top pallet nor allows the stack to shift.

c. Lower pallet(s) containing either parcels or bundles of mail need not be top-capped if the top surface of each pallet load provides a sturdy, flat surface, parallel to the pallet base, that allows safe and efficient stacking of pallets placed on top and prevents sliding of the top pallet(s), damage to the loaded mail, or crushing of the load.

8.2.2 Construction

Any material may be used as a top cap if it provides a flat, level surface horizontal to the base pallet, protects the integrity of the mail below it while supporting a loaded pallet above, and allows easy entry of a forklift to remove the upper pallet(s). Flimsy paper or fiberboard (e.g., the ends of paper rolls) or similar material is inadequate and may not be used as a top cap.

8.2.3 Securing

A top cap must be secured to the pallet horizontal to the plane of the base pallet, with either stretchwrap or at least two crossed straps or bands, so that the cap stays in place to protect the mail and maintain the integrity of the pallet load.

8.2.4 Use by Nonconforming Mailer

A nonconforming mailer (see 8.1.4) must use top caps on all pallets of sacks, letter mail trays, parcels, or bundles of mail, regardless of weight, or on pallets containing pallet boxes no more than 60 inches high. Top caps must be approximately 48 by 40 inches and meet one of these construction standards:

a. Five-wood boards, with uniform edges and nine-leg pallet contact for stacking.

b. Fiberboard box-end style, with a minimum 3-inch side and wall material of at least double-wall corrugated fiberboard C-flute and/or B-flute.

c. Fiberboard honeycomb covered on both sides, with heavy linerboard at least 1/2 inch thick.

d. Corrugated fiberboard C-flute sheet covering the entire top of the load, with standard pallet solid fiberboard corner edge protectors.

8.3 Stacking Pallets

8.3.1 Physical Characteristics

[1-26-14] Pallets may be stacked two to six tiers high if:

a. The combined gross weight of the stacked pallets (pallets, top caps, and mail) does not exceed 2,200 pounds.

b. The heaviest pallet is on the bottom and the lightest is on the top.

c. Individual pallets are secured with straps or stretchable or shrinkable plastic as specified in 8.1.3.

d. The stack of pallets is secured with at least two straps or bands of appropriate material to maintain the integrity of the stacked pallets during transport and handling. Wire or metal bands, straps, buckles, seals, and similar metal fastening devices cannot be used. The stack of pallets cannot be secured together with stretchable or shrinkable plastic.

e. Each pallet is top-capped as specified in 8.2.

f. The combined height of the stacked pallets and their loads does not exceed 84 inches. *Exception:* Pallets prepared for entry at Anchorage or Fairbanks, Alaska, cannot exceed 72 inches (pallets, top caps, and mail).

8.3.2 Pallet Height Restriction for Nonconforming Mailer

A nonconforming mailer (see 8.1.4) who stacks pallets is subject to the requirements of 8.3.1 with the additional restrictions that the combined height of any stacked pallets may not exceed 77 inches and that stacking pallets four tiers high is permitted only for pallets of parcels.

8.4 Pallet Boxes

8.4.1 Use

A mailer may use pallet boxes constructed of single-, double-, or triple-wall corrugated fiberboard placed on pallets to hold sacks or parcels. Pallet boxes must protect the mail and maintain the integrity of the pallet loads throughout transportation, handling, and processing. Single-wall corrugated fiberboard may be used only for light loads (such as lightweight parcels) that do not require transportation by the USPS beyond the entry office, or for Parcel Select DSCF price mail. Mailers must supply their own pallet boxes. The base of the boxes must measure approximately 40 by 48 inches. Pallet standards require the use of pallet boxes meeting the size requirements in 8.4.2 for machinable Parcel Select claiming ONDC Presort and NDC Presort discounts. Pallet standards prohibit use of pallet boxes for nonmachinable Parcel Select claiming ONDC Presort and NDC Presort discounts. Pallet boxes meeting the size dimensions in 8.4.2 also may be used at the mailer's option for Parcel Select DSCF and Parcel Select DDU price mail.

8.4.2 Height

The combined height of a single pallet, pallet box, and mail may not exceed 77 inches. The contents of the box may not extend above the top rim of the box. For all Parcel Select and Package Services mailings entered at a DSCF or DDU, the height of the pallet box may not exceed 60 inches (excluding the pallet). For Parcel Select ONDC Presort and NDC Presort price mailings of machinable pieces, the height of the pallet box must not exceed 69 inches (excluding the pallet).

8.4.3 Securing

Pallet boxes must be secured to the pallet with strapping, banding, stretchable plastic, shrinkwrap, or other material (wire or metal bands, straps, buckles, seals, and similar metal fastening devices cannot be used) that ensures that the pallet can be safely unloaded from vehicles, transported, and processed as a single unit to the point where the contents are distributed with the load intact if:

a. The pallet and its contents are transported by the USPS from the office where the mail is accepted to another postal facility where the contents are distributed; and

b. The weight of the mail in the box is not sufficient to hold the box in place on the pallet during transportation and processing.

8.4.4 Use by Nonconforming Mailer

Except when mailing Parcel Select claiming a DSCF or DDU price, a nonconforming mailer (see 8.1.4) may use pallet boxes only if the boxes are constructed of triple-wall corrugated fiberboard (C-flute and/or B-flute material) with a maximum height (pallet and box) of 77 inches.

8.5 General Preparation

8.5.1 Presort

Pallet sortation is generally intended to presort the palletized portion of a mailing to at least the finest extent required for the corresponding class of mail and method of preparation. Pallet sortation is sequential from the lowest (finest) level to the highest and must be completed at each required level before the next optional or required level is prepared. Standard preparation terms are defined in the Mail Preparation section for each class of mail, standard presort levels are defined in 8.0, and advanced presort levels are defined in 10.0, 12.0, and 13.0. For sacks, trays, or machinable parcels on pallets, the mailer must prepare all required pallet levels before any mixed ADC or mixed NDC pallets are prepared for a mailing or job. Except as described in 15.1g, bundles must not be placed on mixed ADC or mixed NDC pallets. Bundles that cannot be placed on pallets must be prepared in sacks under the standards for the price claimed. The standards for bundle reallocation to protect the SCF, ADC, or NDC pallet (8.11, 8.13, and 8.14) are optional methods of pallet preparation designed to retain as much mail as possible at the SCF, ADC, or NDC level. These standards may result in some bundles of Periodicals flats and irregular parcels and Standard Mail flats that are part of a mailing job prepared in part as palletized flats at automation prices not being placed on the finest level of pallet possible. Mailers must use PAVE-certified presort software to prepare mailings using bundle reallocation (bundle reallocation is optional, but if performed, it must be done for the complete mailing job).

8.5.2 Required Preparation

The following standards apply to Periodicals, Standard Mail, Parcel Select, and Package Services, except Parcel Select mailed at NDC Presort, ONDC Presort, DSCF, and DDU prices.

a. Mailers must prepare a pallet to the required sortation level(s) for the class of mail when a mailing contains 500 or more pounds of bundles, sacks, or parcels or 72 linear feet or six layers of letter trays for the destination.

b. For bundles of flat-size mailpieces or bundles of irregular parcels on pallets, after preparing all possible pallets under 8.5.2a, when 250 or more pounds of bundles remain for an ADC (Periodicals) or for a NDC/ASF (Standard Mail, Parcel Select, and Package Services), mailers must prepare the ADC or NDC/ASF pallet, as applicable for the class of mail. Exception: If there are no ADC or NDC/ASF pallets in a mailing and 250 or more pounds remain for an SCF, mailers must prepare the SCF pallet.

c. Bundles that cannot be placed on an ADC, NDC/ASF, or SCF pallet may be placed on mixed ADC pallets if allowed by the specific standards for the class and shape of mail, or be placed in sacks (8.9.1).

8.5.3 Minimum Load

The following minimum load standards apply to mail prepared on pallets:

a. For Periodicals, Standard Mail, Parcel Select, and Package Services (except for Parcel Select mailed at NDC Presort, ONDC Presort, DSCF, and DDU prices):

   1. In a single mailing, the minimum load per pallet is 250 pounds of bundles, parcels, or sacks, except as provided in items 2 through 4 below. When preparing letter trays on pallets, the minimum load is 36 linear feet or three layers of trays, except as provided in items 2 and 4 below.

   2. There is no minimum load for pallets entered at a destination delivery unit (DDU) if the mail on those pallets is for that unit's service area.

   3. The minimum load for pallets is 200 pounds of Standard Mail parcels (machinable, irregulars, or NFMs) entered at origin (NDC only) or at a DNDC to claim the 5-digit or NDC price.

   4. A pallet may contain a minimum of 100 pounds of nonletter-size mail or 12 linear feet of letter trays if it is a NDC or ASF pallet entered at the destination NDC or ASF; an ADC pallet entered at the destination ADC; an SCF pallet entered at the destination SCF; or the only pallet entered at an individual destination NDC or ASF, ADC, or SCF facility.

   5. At an SCF, a 5-digit, 3-digit, or SCF pallet may contain less than the required minimum load of mail for that SCF's service area only if the SCF manager provides written authorization for such preparation.

b. Parcel Select mailed at NDC Presort, ONDC Presort, DSCF, and DDU prices. A minimum load for the price claimed may be stated in terms of weight, combined piece minimum and weight, or minimum height. There are separate minimum mail heights for machinable parcels and for nonmachinable parcels claimed at ONDC Presort and NDC Presort prices. Mail entered at the Standard Post DSCF prices and prepared directly on pallets or in pallet boxes on pallets must be prepared under either a minimum height requirement or under one of two options requiring a minimum number of pieces and pounds per pallet. There is no minimum weight requirement for an SCF pallet containing 5-digit scheme and 5-digit sacks prepared for the DSCF price. There are no minimums for the Parcel Select DDU price.

8.5.4 Minimum Height of Mail

The definitions of the minimum height of mail used to qualify for ONDC Presort, NDC Presort, and DSCF Parcel Select prices are as follows:

a. *Machinable parcels.* The minimum height of mail in a pallet box is the shortest vertical distance measured from the bottom of a pallet box to the top of the lowest mailpiece. The height of the pallet is not included in this measurement.

b. *Nonmachinable parcels.* The minimum height of mail on a pallet is the shortest vertical distance measured from the top of the pallet to the top of the lowest mailpiece. The height of the pallet is not included in this measurement.

8.5.5 Maximum Load

The maximum weight (mail and pallet) is 2,200 pounds. The maximum height of a single pallet (mail and pallet) is 77 inches for bundles, parcels, sacks, or pallet boxes, or 77 inches or 12 layers of trays (whichever occurs first) for letter trays. *Exception:* A single pallet that is prepared for entry at Anchorage or Fairbanks, Alaska, has a maximum height of 72 inches (pallet, top cap, and mail).

8.5.6 Mail on Pallets

[1-26-14] These standards apply to mail on pallets:

a. Pieces in trays, bundles, and sacks must be prepared under the standards for the class of mail and price claimed.

b. When two or more Periodicals mailings, two or more Standard Mail mailings, or two or more Bound Printed Matter mailings are placed together on pallets, the mailer must keep records for each mailing as required by the standards for the class of mail.

c. For letter-size Standard Mail and Periodicals prepared in trays on pallets, mailers must prepare carrier route price mail on separate 5-digit pallets (5-digit carrier routes pallets) from automation price or nonautomation price mail (5-digit pallets).

d. For determining minimum pallet volume, mail in letter trays is measured in full layers of trays or in linear feet. A 2-foot tray equals 2 linear feet; a 1-foot tray equals 1 linear foot.

e. Heavier, fuller trays must be placed at the bottom of the load, unless other standards (such as 245.7.7) require placement of certain trays on the top of the pallet.

f. For Bound Printed Matter irregular parcels, Presorted and Carrier Route price mail may be combined on all levels of pallet. For Bound Printed Matter flats, Presorted and Carrier Route price mail may be combined on all levels of pallet except as provided in 8.5.6g.

g. For sacks of Periodicals, Standard Mail, and Bound Printed Matter flats or irregular parcels, carrier route price mail must be prepared on separate 5-digit pallets from automation price and/or presorted price mail.

h. Heavier, fuller trays must be placed at the bottom of the load, unless excepted by other standards (such as 245.7.7) that may require placement on the top of the pallet.

i. All presort bundles on pallets must be placed with the addresses facing up.

8.5.7 Arranging Pieces in a Bundle (“Facing”)

Except as noted in 8.5.8, all pieces in a bundle must be “faced” (arranged with the addresses in the same read direction), with an address visible on the top piece.

8.5.8 Counter-Stacking—Sacked and Palletized Mail

Bundles of flats and other pieces of nonuniform thickness may be prepared by counter-stacking under conditions in 203.3.0.

8.5.9 Address Visibility

See 203.3.0 for address visibility requirements for bundles of flats or parcels on pallets.

8.5.10 Labeling Bundles

Unless excepted by standard, the presort level of each bundle (other than carrier route bundles) must be identified either with an optional endorsement line or with a barcoded pressure-sensitive bundle label. See 203.3.0 for more information on labeling bundles.

8.5.11 Securing Bundles on Pallets

Bundles must withstand normal transit and handling without breaking and without causing injury to USPS employees or damage to USPS equipment. Mailers must meet the standards in 203.3.0 when preparing and securing bundles on pallets.

8.5.12 Sacked Mail

Mail that is not palletized (e.g., the mailer chooses not to prepare NDC pallets, or the bundles do not meet the machinability standards in 8.5.7 through 8.5.11) must be prepared under the standards for the price claimed. For Periodicals, the mailer must separately sack bundles of each publication that are not palletized or that are excluded from palletization. Trays that are not palletized must be bedloaded. Sacks (including sacks of bundles not placed on pallets) containing bundles remaining after all pallets are prepared may be presented with the palletized mail (and reported on the same postage statement) if separated from the palletized portion of the mailing.

8.5.13 Nonconforming

For a nonconforming mailer (see 8.1.4) of letter-size mail in trays, the combined height of a pallet and its load cannot exceed six layers of MM or EMM letter trays.

8.6 Pallet Placards

8.6.1 Placement

At least two clearly visible labels must be affixed on two adjacent sides of each pallet. Pallets prepared through plant-load or drop-shipment agreements must be placed on transportation so that a pallet placard on each pallet faces toward the rear of the vehicle.

8.6.2 Specifications

Pallet placards must be pink for Periodicals and white for First-Class Mail, Standard Mail, Package Services, and Parcel Select. Pallet placards must measure at least 8 inches by 11 inches, except that pallet or other USPS container placards bearing Intelligent Mail container barcodes may measure no less than 4 inches by 7 inches when prepared under 708.6.4.6. Placards, affixed to pallets containing Periodicals, bearing an Intelligent Mail container barcode and prepared in the optional smaller format under 708.6.4.6, may be white instead of pink, when a vertical pink one-half inch wide identification bar is included along the left-hand side of the placard; or may be white when used in conjunction with an adjacent pink designator label, under 708.6.4.5.

8.6.3 Lettering

Lettering for required information on pallet labels must be at least 1/2 inch high (or at least 48-point type). *Exception:* When customers apply USPS-specified pallet barcodes to pallet labels, the lettering for the required information on line 3 (origin line) must be at least 1/8 inch high (or at least 12-point type). See the "surface visibility" information at *http://ribbs.usps.gov* for more information about pallet barcodes.

8.6.4 Line 1 (Destination Line)

Line 1 (destination line) must meet these standards:

a. *Placement.* Line 1 must be the first visible line on the label. It must be completely visible and legible when placed on the pallet. If the pallet label does not provide enough space for all required Line 1 information, the destination ZIP Code may be placed right-justified on the line immediately below the rest of Line 1 and above Line 2 (content line). A standard abbreviation for the destination city name may be used.

b. *Information.* Line 1 must contain only the information specified by standard, including the appropriate destination facility prefix (e.g., "ADC"). Two zeros may follow the 3-digit ZIP Code prefix required by labeling standards (e.g., 223 as 22300).

c. *Overseas military mail.* On 5-digit pallets for overseas military destinations, Line 1 shows, from left to right, "APO" or "FPO," followed by "AE" (for ZIP Codes within the ZIP Code prefix range 090-098), "AA" (for ZIP Codes within the 3-digit ZIP Code prefix 340), or "AP" (for ZIP Codes within the ZIP Code prefix range 962-966), followed by the destination 5-digit ZIP Code of the mail on the pallet.

8.6.5 Line 2 (Content Line)

Line 2 (content line) must meet these standards:

a. *Content line information.* Pallet labels must indicate whether the mail on the pallet is barcoded, or not barcoded, or both. The content line (line 2 of required information) must be the second visible line on the label. This line must show the class and processing category of the mail on the pallet and other information as specified by standard. If the content line of a pallet label does not provide enough space for all required information, the content information may be continued right-justified on the line immediately below the content line and above the office of mailing or mailer information line.

b. *Codes.* The codes shown below must be used as appropriate on Line 2 of sack, tray, and pallet labels.

CONTENT TYPE	CODE
Barcoded	BC
Barcoded and Nonbarcoded	BC/NBC
Carrier Route	C (type of route)
Carrier Routes	CR-RT or CR-RTS
Digit	D

CONTENT TYPE	CODE
First-Class Mail	FCM
First-Class Package Service	FC PKG
Flats	FLTS
General Delivery Unit	G
Highway Contract Route	H
Irregular Parcels	IRREG (Periodicals, Standard Mail, and Package Services only)
Letters	LTR or LTRS
Machinable	MACH
Mixed	MXD
Mixed Machinable and Irregular Parcels	MACH & IRREG (Standard Mail only)
Nonmachinable	NON MACH
Nonbarcoded	NON BC (sacks) NBC (pallets and cotrayed or cosacked mail under 705.9.0)
Nonmachinable Parcels	NON MACH
Package Services	PSVC
Parcels	PARCELS (First-Class Mail and Package Services only)
Parcel Select Lightweight	PSLW
Periodicals	PER (see 207.21.0) NEWS (see 207.21.0)
Post Office Box Section	B
Rural Route	R
Scheme	SCH
Standard Mail	STD
Working	WKG

8.6.6 Line 3

The office of mailing or mailer information line must be the third and bottom line of required information, except as allowed in 8.6.6a or 8.6.6b. Line 3 must show (left-justified) either the city and state of the origin entry Post Office or the mailer's name and the city and state of the mailer's location, except under 8.6.6a or 8.6.6b. Placards on containers of parcels prepared using eVS under 2.9 must show “eVS” either to the left of required line 3 information or directly below line 3 using the same size and lettering used for line 3. At the mailer's option, pallet placards prepared for destination entry may have the correct destination entry office information printed left-justified on line 3 only under these conditions:

a. The origin entry office or mailer location information is placed right-justified on line 3, preceded by “ORIGIN:” or “ORGN:”; or

b. The origin entry office or mailer location information is printed right-justified directly below line 3 or in either the top right corner or the bottom right corner of the extraneous information section, preceded by “ORIGIN:” or “ORGN:”. Under this option, the origin entry or mailer location information is required even though placed in the “extraneous” information section.

c. For all options (8.6.6a and 8.6.6b), the origin entry office or mailer location information must be printed in a minimum 12 point font and may be abbreviated to show the mailer's name and ZIP Code of location.

8.6.7 5-Digit, 5-Digit Carrier Routes, and 5-Digit Scheme Carrier Routes Pallets

All 5-digit carrier routes or 5-digit scheme carrier routes pallets must show the words “CARRIER ROUTES” (or “CR-RTS”) after the processing category description on the content line under 8.0, 10.0, 12.0, and 13.0. 5-digit pallets of Bound Printed Matter that contain only carrier route price mail also must show the words “CARRIER ROUTES” (or “CR-RTS”) after the “5D” pallet level description on the contents line.

8.6.8 Extraneous Information

Extraneous information is permitted on pallet labels if:

a. The print size is smaller than 1/2 inch; with a maximum 12 point font on the optional smaller placards under 708.6.6.6.

b. It does not consist of a numbered series resembling a ZIP Code or 3-digit ZIP Code prefix.

c. It does not appear on or between the lines reserved for USPS required information (blank lines are permitted). Exception: For combined mailings of Standard Mail and Package Services machinable parcels, mailer codes and extraneous information may appear between the content line and the office of mailing or mailer information line.

d. It is below the office of mailing or mailer information line.

e. A 1-inch clear space is maintained around the lines reserved for USPS required information.

f. On the office of mailing or mailer information line, the mailer’s name or abbreviation, “Mailer,” “From” (or “FR”), “Entered at,” or a similar notation precedes the required information, or mailer codes or other extraneous information appear to the right of the required information.

8.6.9 Periodicals Publications

Except as provided in 8.16 for copalletized mailings, Periodicals publications must use one of the following for Line 2 class information:

a. “PER.”

b. “NEWS” if published weekly or more often or if authorized newspaper treatment as of March 1, 1984.

8.6.10 Pallet Bundle Information

It is recommended that mailers preparing bundles on pallets add to the pallet label, below the office of mailing or mailer information line and according to the provisions of 8.6.8, additional information listing the number of bundles for each bundle sortation and price level on the pallet (i.e., the number of carrier route bundles, the number of 5-digit, 3-digit, and ADC automation price bundles, and the number of 5-digit, 3-digit, and ADC Presorted price bundles on each pallet).

8.7 Copalletized, Combined, or Mixed-Price Level Palletized Mailings

8.7.1 General

Copalletized, combined, or mixed-price level palletized mailings of letter-size or flat-size pieces must be prepared under the standards for the class of mail, subject to specific authorization by Business Mailer Support when required. The following conditions apply when making copalletized mailings:

a. Postage statements and mailing documentation must be transmitted to the USPS using an approved electronic method.

b. In accordance with 708.6.5 and 708.6.6, Intelligent Mail tray labels must be used on trays and sacks and Intelligent Mail container placards must be used on pallets or similar containers.

c. If consolidating multiple mailings on pallets, update the electronic data for each of the original mailings. This updated data must be reflected in the electronic data transmitted to the USPS.

d. Meet postage payment requirements as specified by Business Mailer Support.

8.7.2 Application

The mailer (or publisher or agent) must submit a written request to Business Mailer Support to present the types of pallets described in this section. A separate request is required for each type of pallet at each location, but multiple, concurrent applications are acceptable. A mailer who cannot meet the minimum palletization standards without copalletizing, combining, or commingling mixed price mailings might still qualify if the total copalletized, combined, or commingled mailing meets minimum pallet standards. The request must be received at least 30 days before the first mailing and include the names, addresses, and telephone numbers of the mail owner and of the firm or person preparing the mail; a description of the mailing (e.g., size, weight, class, price, volume, mailing frequency, and postage payment method); the type of authorization requested; and a sample of the applicable documentation under 8.0, or 10.0, 12.0, and 13.0.

8.7.3 Periodicals Publications

To combine more than one Periodicals publication on pallets, the mailer must merge and presort copies of all the publications into common bundles to achieve the finest presort level for the combined mailing. To copalletize different Periodicals flat-size publications, the mailer must consolidate on pallets all independently sorted bundles for each publication to achieve the finest presort level for the mailing. Postage for copalletized mailings of flat-size Periodicals must be paid at the consolidator's site. A combined or copalletized mailing prepared using bundle reallocation under 8.11 or 8.13 may not always result in all bundles being placed on

the finest pallet level possible. Both combined and copalletized publications must be supported by the documentation required in 8.0, or 10.0, 12.0, and 13.0. Preferred Periodicals may be combined with Regular Periodicals only as permitted by standard.

8.7.4 Standard Mail

To copalletize different Standard Mail flat-size mailings, the mailer must consolidate on pallets all trays or bundles from each mailing to achieve the finest presort level for the mailing, except that a flat-size copalletized mailing prepared under 8.11 or 8.14 using the bundle reallocation option may not always result in all bundles on the finest pallet level possible. At the time of mailing, the mailer must present computer-generated listings required in 8.0, or 10.0, 12.0, and 13.0 that include a summary list consolidating the copalletized multiple mailings and a list of the contents of each pallet by ZIP Code and presort level. For Standard Mail letter-size pieces, the presort level of the mailpieces in the copalletized mailing must accurately reflect the postage and entry discount paid at the origin site; and may not always result in the finest pallet presort level possible. Origin mailers participating in a copalletized mailing of Standard Mail letters in trays must prepare a separate postage statement for the portion entered at the origin site and another postage statement for the portion directed to the consolidator.

8.7.5 Cancellation

An authorization may be canceled by Business Mailer Support if the mailer does not meet the standards for pallets or the prices claimed or the mailer does not submit information on future mailings as requested by Business Mailer Support. A mailer may appeal canceled authorizations through Business Mailer Support to the Business Mail Acceptance manager, USPS Headquarters.

8.8 Basic Uses

These types of mail may be palletized:

a. Letter-size mail in trays.

b. Bundles of nonletter-size mail not prepared in sacks.

c. Bundles or parcels in sacks.

d. Machinable or irregular parcels.

e. Copalletized multiple letter-size mailings, prepared in trays, subject to 8.0.

f. Copalletized multiple flat-size mailings, subject to 8.0.

g. Combined mailings of machinable parcels (Standard Mail and Package Services), subject to 6.0.

h. Two or more Periodicals publications combined or copalletized, subject to 8.0.

i. Combined mailings of Nonprofit Standard Mail mixed price levels, subject to 8.0.

j. Commingled zoned price Parcel Select and Package Services, subject to 255.1.7.

8.9 Bundles on Pallets

8.9.1 Applicability

Presort destination bundles of Periodicals, Standard Mail, and Package Services flats and irregular parcels may be placed directly on pallets under 8.9.2 through 8.9.5 and 8.10. Mail that cannot be placed on pallets must be prepared in sacks under the applicable standards. Sacks containing any remaining bundles after all pallets are prepared may be presented with the palletized portion of the mailing job (and, subject to 8.16.5, reported on the same postage statement) if the sacked portion is presented separately from the palletized portion.

8.9.2 Basic Bundling Standards

Bundle preparation for Periodicals, Standard Mail, and Package Services mailpieces must meet the applicable standards for each class or subclass of mail. Bundles may be sorted onto pallets under 8.10 and 10.0, 12.0, and 13.0.

8.9.3 Periodicals

Bundle size: Six-piece minimum (lower volume bundles permitted under 207.22.0, and 207.23.0), 20-pound maximum, except that:

a. Firm bundles may contain as few as two copies of a publication. Mailers must not consolidate firm bundles with other bundles to the same 5-digit destination. Only In-County firm bundles may be counted as an addressed piece for presort standards (see 207.22.0 and 207.23.0).

b. All pieces for the same presort destination must be in one bundle if they weigh less than 10 pounds. Otherwise, bundles must weigh from 10 to 20 pounds each.

c. Carrier route and 5-digit bundles placed on 5-digit or finer pallets may weigh up to 40 pounds when entered at a DDU.

d. The last bundle to a presort destination may contain less than 10 pounds.

8.9.4 Standard Mail

Bundle size: 10-piece or 15-piece minimum as applicable; 20-pound maximum, except that:

a. All pieces for the same presort destination must be in one bundle if they weigh less than 10 pounds. Otherwise, bundles must weigh from 10 to 20 pounds each.

b. The last bundle to a presort destination may contain less than 10 pounds.

8.9.5 Bound Printed Matter

Bound Printed Matter on pallets must be bundled as follows:

a. Minimum Bundle Size. Bundle mail under the minimum bundle size of "10 pieces or 10 pounds, whichever comes first" according to these standards:

   1. For identical-weight pieces, a single-piece weight of 1 pound results in 10 pieces weighing 10 pounds. Identical-weight pieces weighing 1 pound or less must be prepared using the 10-piece minimum; those that weigh more must be prepared using the 10-pound minimum.

2. For nonidentical-weight pieces, mailers must either use the minimum that applies to the average piece weight for the entire mailing (divide the net weight of the mailing by the number of pieces; the resulting average single-piece weight determines whether the 10-piece or 10-pound minimum applies). Alternatively, bundle by the actual piece count or mail weight for each bundle destination, provided documentation can be presented with the mailing that shows (specifically for each bundle) the number of pieces and their total weight.
3. Mailers must note on the accompanying postage statement whether they applied the 10-piece or 10-pound threshold, or both.

b. Presorted and Carrier Route Bound Printed Matter:

1. Only individual pieces of flats or irregular parcels that weigh less than 10 pounds each may be prepared as bundles on pallets. Presorted price pieces that weigh 10 or more pounds each must be prepared and palletized as machinable parcels under 8.10.4, or prepared in sacks under 265.5.0 for flats and 265.5.0 for parcels. Carrier route pieces that individually weigh 10 or more pounds each must either be prepared and palletized as machinable parcels under 8.10.4, and qualify for Presorted prices or be prepared in sacks under 265.6.0 for flats and 265.5.0 for parcels and qualify for carrier route prices.
2. Bundles must be prepared under 265.5.0 for presorted flats and 265.5.0 for presorted parcels, or 11.0, as appropriate. The minimum bundle size is 10 addressed pieces or 10 pounds, whichever occurs first, except that the last bundle to a presort destination may contain fewer than 10 pieces or weigh less than 10 pounds. When there are at least 10 pieces but less than 10 pounds for a presort destination, the pieces must be prepared in a single physical bundle. The maximum physical bundle size for pallets prepared under 8.10.4a through 8.10.4d, and 8.10.5a through 8.10.5g is 40 pounds. The maximum physical bundle size for pallets prepared under 8.10.4d through 8.10.4h, and 8.10.5g through 8.10.5k is 20 pounds. The total number of bundles for a single presort destination must not exceed the number of 10-pound increments to that destination. Each physical bundle must contain at least two addressed pieces.

8.10 Pallet Presort and Labeling

8.10.1 First-Class Mail—Letter or Flats Trays

Mailers may palletize First-Class Mail according to a local customer/supplier agreement or under 8.10.1. First-Class Mail palletization is optional, but mailers using this option must prepare pallets in the sequence listed below and complete each required level before preparing the next optional or required level. Pallets must contain at least 72 linear feet of letter trays (six full layers) or 24 linear feet of flats trays (three full layers). Maximum pallet height is 12 layers or 77 inches of letter trays (whichever occurs first) or 77 inches of flats trays. When available and with approval by the plant manager of the origin facility, mailers may use all-purpose containers (APCs) or other USPS-approved containers. Mailers approved to use APCs must prepare containers when they have a minimum of 48 linear feet of letter trays or 16 linear feet of flats trays to a presort destination. Preparation, sequence, and labeling:

a. 5-digit. Optional. Based on the origin ZIP Code, for 5-digit ZIP codes within the 3-digit destinations listed in L201 column B. Pallet may contain trays only for the same 5-digit ZIP Code (for non-automation letters and flats) or 5-digit scheme ZIP codes (automation letters only). Place 5-digit scheme trays on 5-digit pallets according to the destination shown in the current City State Product. Labeling:

1. Line 1: city, state, and 5-digit ZIP Code destination.
2. Line 2: "FCM LTRS" or "FCM FLTS," followed by "5D."

b. b. Origin SCF (local mail). Required; no minimum. Pallets contain trays destined for the 3-digit ZIP Codes serviced by the origin SCF facility in L005; all MXD AADC and MXD ADC trays. Mailers may place AADC or ADC trays on origin SCF pallets when the tray's "label to" 3-digit ZIP Code (from L801 for AADC trays and L004 for ADC trays) is within the origin SCF's service area; and must place trays containing pieces paid at the single-piece price on origin SCF pallets, unless required to be presented separately by special postage payment authorization or customer service agreement (CSA). Labeling:

1. Line 1: L002, Column C.
2. Line 2: "FCM LTRS" or "FCM FLTS," followed by "WKG."

c. SCF. Required. For destinations listed in L201, based on origin ZIP Code. Pallets contain trays destined for the 3-digit ZIP Codes in L005. Mailers may, at their option, place AADC or ADC trays on SCF pallets when the tray's "label to" 3-digit ZIP Code (from L801 for AADC trays and L004 for ADC trays) is within that SCF's service area. Labeling:

1. Line 1: L002, Column C.
2. Line 2: "FCM LTRS" or "FCM FLTS," followed by "SCF."

d. AADC. Required, for machinable and automation letters only. For destinations listed in L201, based on origin ZIP Code. Pallet may contain letter trays only for the 3-digit ZIP Code group in L801. Labeling:

1. Line 1: L801, Column B.
2. Line 2: "FCM LTRS," followed by "AADC."

e. ADC. Required, for flats and nonmachinable letters only. For destinations listed in L201, based on origin ZIP Code. Pallet may contain trays only for the 3-digit ZIP Code groups in L004. Labeling:

1. Line 1: L004, Column B.
2. Line 2: "FCM LTRS" or "FCM FLTS," followed by "ADC."

f. Origin Mixed ADC Surface. Required. Pallet may contain trays destined for the 3-digit ZIP Codes in L201, based on origin ZIP Code. Labeling:

1. Line 1: "OMX" followed by city, state, and ZIP Code information for ADC serving 3-digit ZIP Code prefix of entry post office, as shown in L201.
2. Line 2: "FCM LTRS" or "FCM FLTS," followed by "WKG."

g. Mixed ADC Air (all other). Required; no minimum. May contain surface trays when no mixed ADC surface container is prepared under 8.10.1f. Labeling:

1. Line 1: “MXD” followed by city, state, and ZIP Code information for ADC serving 3-digit ZIP Code prefix of entry post office, as shown in L004.
2. Line 2: “FCM LTRS” or “FCM FLTS,” followed by “WKG.”

8.10.2 Periodicals—Bundles, Sacks, or Trays

Pallets must be prepared under 8.0 in the sequence listed below and completed at each required level before the next optional or required level is prepared. Unless indicated as optional, all sort levels are required under the conditions shown. See 207.29.0 for additional requirements for destination entry prices eligibility. For mailings of sacks or trays on pallets, pallet preparation begins with 8.10.2e. Pallets must be labeled according to the Line 1 and Line 2 information listed below and under 8.6. All pallets prepared under 8.10.2 may contain firm bundles, and pallets prepared under 8.10.2a through 8.10.2h may contain low-volume bundles. Bundles of Periodicals flats and irregular parcels may also be palletized under 10.0, 12.0, or 13.0. For pieces meeting the standards in 207.26.0, mailers may prepare the nonpalletized (residual) portion of a mailing in sacks under 10.0. Prepare pallets in the following sequence:

a. *Merged 5-digit scheme,* required, permitted for bundles only. Not permitted for bundles containing noncarrier route automation-compatible flats under 201.3.0. Required for bundles containing all other flats or irregular parcels. Pallet must contain carrier route bundles and noncarrier route 5-digit bundles (automation price and/or Presorted price bundles) for the same 5-digit scheme under L001. For 5-digit destinations not part of L001, merged 5-digit pallet preparation begins with 8.10.2d. Labeling:

1. Line 1: L001.
2. Line 2: “PER” or “NEWS,” as applicable; followed by “FLTS” or “IRREG,” as applicable; followed by “CR/5D”; followed by “SCHEME” (or “SCH”).

b. *5-digit scheme carrier routes,* required, permitted for bundles only. Pallet must contain only carrier route bundles for the same 5-digit scheme under L001. For 5-digit destinations not part of L001, 5-digit carrier routes pallet preparation begins with 8.10.2e. Labeling:

1. Line 1: L001.
2. Line 2: “PER” or “NEWS,” as applicable; followed by “FLTS” or “IRREG,” as applicable; followed by “CARRIER ROUTES” (or “CR-RTS”); followed by “SCHEME” (or “SCH”).

c. *5-digit scheme,* required, permitted for bundles only. Not permitted for bundles containing automation-compatible flats under 201.3.0. Required for bundles containing all other flats and irregular parcels. Pallet must contain only 5-digit bundles of automation price and/or Presorted price mail for the same 5-digit scheme under L001. For 5-digit destinations not part of L001, 5-digit pallet preparation begins with 8.10.2f. Labeling:

1. Line 1: L001.

2. Line 2: “PER” or “NEWS,” as applicable; followed by “FLTS” or “IRREG,” as applicable; followed by “5D”; followed by “BARCODED” (or “BC”) if pallet contains automation price mail; followed by “NONBARCODED” (or “NBC”) if pallet contains Presorted price mail; followed by “SCHEME” (or “SCH”).

d. *Merged 5-digit,* required, permitted for bundles only. Not permitted for bundles containing noncarrier route automation-compatible flats under 201.3.0. Required for bundles containing all other flats or irregular parcels. Pallet must contain carrier route bundles and noncarrier route 5-digit bundles (automation price and/or Presorted price bundles) for the same 5-digit ZIP Code. Labeling:

1. Line 1: city, state, and 5-digit ZIP Code destination (see 8.6.4c for overseas military mail).
2. Line 2: “PER” or “NEWS,” as applicable; followed by “FLTS” or “IRREG,” as applicable; followed by “CR/5D.”

e. *5-digit carrier routes,* required, except for trays; permitted for bundles, sacks, and trays. Pallet must contain only carrier route mail for the same 5-digit ZIP Code. Labeling:

1. Line 1: city, state, and 5-digit ZIP Code destination (see 8.6.4c for overseas military mail).
2. Line 2: “PER” or “NEWS,” as applicable; followed by “FLTS,” “IRREG,” or “LTRS,” as applicable; followed by “CARRIER ROUTES” (or “CR-RTS”).

f. *5-digit,* required, except for trays; permitted for bundles, sacks, and trays. Pallet must contain only automation price and/or Presorted price mail for the same 5-digit ZIP Code or the same 5-digit scheme under L007 (for automation-compatible flats only under 201.3.0). Five-digit scheme bundles are assigned to pallets according to the “label to” 5-digit ZIP Code in L007. Labeling:

1. Line 1: city, state, and 5-digit ZIP Code destination (see 8.6.4c for overseas military mail).
2. Line 2: “PER” or “NEWS,” as applicable; followed by “FLTS,” “IRREG,” or “LTRS,” as applicable; followed by “5D”; followed by “BARCODED” (or “BC”) if pallet contains automation price mail; followed by “NONBARCODED” (or “NBC”) if pallet contains Presorted price mail.

g. *3-digit,* optional, option not available for bundles for 3-digit ZIP Code prefixes marked “N” in L002. Pallet may contain mail for the same 3-digit ZIP Code or the same 3-digit scheme under L008 (for automation-compatible flats only under 201.3.0). Three-digit scheme bundles are assigned to pallets according to the “label to” 3-digit ZIP Code in L008. Labeling:

1. Line 1: L002, Column A.
2. Line 2: “PER” or “NEWS,” as applicable; followed by “FLTS,” “IRREG,” or “LTRS,” as applicable; followed by “3D”; followed by “BARCODED” (or “BC”) if pallet contains automation price mail; followed by “NONBARCODED” (or “NBC”) if pallet contains carrier route and/or Presorted price mail.

h. *SCF,* required, permitted for bundles, sacks, and trays. Pallet may contain carrier route, automation price, and/or Presorted price mail for the 3-digit ZIP Code groups in L005. Mailers may place origin mixed ADC (OMX) sacks on origin SCF pallets. Labeling:

1. Line 1: L002, Column C.
2. Line 2: “PER” or “NEWS,” as applicable; followed by “FLTS,” “IRREG,” or “LTRS,” as applicable; followed by “SCF”; followed by “BARCODED” (or “BC”) if pallet contains automation price mail; followed by “NONBARCODED” (or “NBC”) if pallet contains carrier route and/or Presorted price mail.

i. *ADC,* required, permitted for bundles, sacks, and trays. Pallet may contain carrier route, automation price, and/or Presorted price mail for the 3-digit ZIP Code groups in L004. Labeling:

1. Line 1: L004.
2. Line 2: “PER” or “NEWS,” as applicable; followed by “FLTS,” “IRREG,” or “LTRS,” as applicable; followed by “ADC”; followed by “BARCODED” (or “BC”) if pallet contains automation price mail; followed by “NONBARCODED” (or “NBC”) if pallet contains carrier route and/or Presorted price mail.

j. *Origin Mixed ADC (OMX), optional for sacks and trays*; allowed with no minimum and required at 100 pounds of mail for bundles of flats. Bundles of flats totaling less than 100 pounds in weight must be sacked if not palletized. Pallet may contain carrier route, automation price, and presorted price mail. Labeling:

1. Line 1: Use the destination information shown in L201, Column C for mail entered at the corresponding entry Post Offices in L201, Column A.
2. Line 2: “PER” or “NEWS,” as applicable; followed by “FLTS,” “IRREG,” or “LTRS,” as applicable; followed by “BARCODED” (or “BC”) if pallet contains automation price mail; followed by “NONBARCODED” (or “NBC”) if pallet contains nonautomation price mail; followed by “WKG.”

k. *Mixed ADC, optional for sacks and trays;* allowed with no minimum and required at 100 pounds of mail for bundles of flats. Bundles of flats totaling less than 100 pounds in weight must be sacked if not palletized. Pallet may contain carrier route, automation price, or presorted price mail. Pallets must not contain sacks, trays or bundles that should be properly placed on the origin mixed ADC (OMX) pallet. Labeling:

1. Line 1: “MXD” followed by the city, state, and ZIP Code information for facility serving 3-digit ZIP Code prefix of entry Post Office as shown in L009, Column A.
2. Line 2: “PER” or “NEWS,” as applicable; followed by “FLTS,” “IRREG,” or “LTRS,” as applicable; followed by “BARCODED” (or “BC”) if pallet contains automation price mail; followed by “NONBARCODED” (or “NBC”) if pallet contains carrier route and/or Presorted price mail; followed by “WKG.”

8.10.3 Standard Mail or Parcel Select Lightweight-Bundles, Sacks, or Trays

Mailers must prepare pallets under 8.0 in the sequence listed below and complete each required level before preparing the next optional or required level. Unless indicated as optional, all sort levels are required. For parcels, use this preparation only for irregular parcels in sacks or Marketing parcels prepared as Product Samples in carrier route bundles, sacks or cartons. For Product Samples, only 5-digit pallets under 8.10.3b and 3-digit pallets under 8.10.3d are allowed, and the pallets must be entered under DNDC or DSCF standards only. Use this preparation, starting with 8.10.3c, for sacks of Parcel Select Lightweight irregular parcels not eligible for preparation under 8.10.8 (use “PSLW” for the line 2 contents description instead of “STD”). Palletize unbundled or unsacked irregular parcels under 8.10.8. Pallets must be labeled according to the Line 1 and Line 2 information listed below and under 8.6. Mailers also may palletize bundles of Standard Mail flats under 10.0, 12.0, or 13.0. Preparation sequence and labeling:

a. *5-digit scheme carrier routes, required*, permitted for bundles of flats only. Pallet must contain only carrier route bundles for the same 5-digit scheme under L001. Labeling:

   1. Line 1: L001.

   2. “STD” followed by “FLTS”; followed by “CARRIER ROUTES” (or “CR-RTS”); followed by “SCHEME” (or “SCH”).

b. *5-digit carrier routes, required except for trays,* permitted for bundles, sacks, trays, and cartons. Pallet must contain only carrier route mail for the same 5-digit ZIP Code. Labeling:

   1. Line 1: city, state, and 5-digit ZIP Code destination (see 8.6.4c for overseas military mail).

   2. Line 2: For flats and Marketing parcels (Product Samples only), “STD FLTS” or "STD MKTG,” as applicable; followed by “CARRIER ROUTES” (or “CR-RTS”). For letters, “STD LTRS”; followed by “CARRIER ROUTES” (or “CR-RTS”); followed by “BC” if pallet contains barcoded letters; followed by “MACH” if pallet contains machinable letters; followed by “MAN” if pallet contains nonmachinable letters.

c. *5-digit,* required except for trays, permitted for bundles, sacks, and trays. Pallet must contain only automation price and/or Presorted price mail for the same 5-digit ZIP Code or same 5-digit scheme. 5-digit scheme bundles and sacks are assigned to 5-digit pallets according to the “label to” 5-digit ZIP Code. Labeling:

   1. Line 1: city, state, and 5-digit ZIP Code destination (see 8.6.4c for overseas military mail).

   2. Line 2: For flats and irregular parcels, “STD” followed by “FLTS” or “IRREG,” as applicable; followed by “5D”; followed by “BARCODED” (or “BC”) if pallet contains automation price mail; followed by “NONBARCODED” (or “NBC”) if pallet contains Presorted price mail. For letters, “STD LTRS 5D”; followed by “BC” if pallet contains barcoded letters; followed by “MACH” if pallet contains machinable letters; followed by “MAN” if pallet contains nonmachinable letters.

d. *3-digit, optional,* option not available for parcels other than Product Sample parcels or for bundles for 3-digit ZIP Code prefixes marked “N” in L002. Pallet may contain mail for the same 3-digit ZIP Code or the same 3-digit scheme under L008 (for automation-compatible flats only under 201.3.0. Three-digit scheme bundles are assigned to pallets according to the “label to” 3-digit ZIP Code in L008. Labeling:

1. Line 1: L002, Column A.
2. Line 2: For flats, “STD” followed by “FLTS;” followed by “3D”; followed by “BARCODED” (or “BC”) if pallet contains automation price mail; followed by “NONBARCODED” (or “NBC”) if pallet contains carrier route and/or Presorted price mail. For letters, “STD LTRS 3D”; followed by “BC” if pallet contains barcoded letters; followed by “MACH” if pallet contains machinable letters; followed by “MAN” if pallet contains nonmachinable letters. For Marketing parcels (Product Samples only), use "STD MKTG."

e. SCF, required, permitted for bundles, sacks, and trays. Pallet may contain carrier route, automation price, and/or Presorted price mail for the 3-digit ZIP Code groups in L005. Mailers may, at their option, place AADC trays on SCF pallets when the tray's “label to” 3-digit ZIP Code (from L801) is within that SCF's service area. Mailers may also, at their option, place mixed ADC or mixed AADC trays, labeled per L010, on an SCF pallet entered at the SCF facility responsible for the processing of mixed ADC or mixed AADC trays for that NDC/ASF facility. Labeling:

1. Line 1: L002, Column C.
2. Line 2: For flats and irregular parcels, “STD” followed by “FLTS” or “IRREG,” as applicable; followed by “SCF”; followed by “BARCODED” (or “BC”) if pallet contains automation price mail; followed by “NONBARCODED” (or “NBC”) if pallet contains carrier route and/or Presorted price mail. For letters, “STD LTRS SCF”; followed by “BC” if pallet contains barcoded letters; followed by “MACH” if pallet contains machinable letters; followed by “MAN” if pallet contains nonmachinable letters.

f. *ASF,* required unless bundle reallocation used under 8.13, permitted for bundles, sacks, and trays. Pallet may contain carrier route, automation price, and/or Presorted price mail for the 3-digit ZIP Code groups in L602. ADC bundles, sacks, or trays are assigned to pallets according to the “label to” ZIP Code in L004 as appropriate. AADC trays are assigned to pallets according to the “label to” ZIP Code in L801. At the mailer’s option, appropriate mixed ADC bundles and sacks of flats; and mixed ADC and mixed AADC trays of letters, may be sorted to ASF pallets according to the “label to” ZIP Code in L010. All mixed ADC bundles, sacks, and trays and mixed AADC trays must contain only pieces destinating within the ASF as shown in L602. Labeling:

1. Line 1: L602.
2. Line 2: For flats and irregular parcels, “STD” followed by “FLTS” or “IRREG,” as applicable; followed by “ASF”; followed by “BARCODED” (or “BC”) if pallet contains automation price mail; followed by

"NONBARCODED" (or "NBC") if pallet contains carrier route and/or Presorted price mail. For letters, "STD LTRS ASF"; followed by "BC" if pallet contains barcoded letters; followed by "MACH" if pallet contains machinable letters; followed by "MAN" if pallet contains nonmachinable letters.

g. *NDC,* required, permitted for bundles, sacks, and trays. Pallet may contain carrier route, automation price, and/or Presorted price mail for the 3-digit ZIP Code groups in L601. ADC bundles, sacks, or trays are assigned to pallets according to the "label to" ZIP Code in L004 as appropriate. AADC trays are assigned to pallets according to the "label to" ZIP Code in L801. At the mailer's option, appropriate mixed ADC bundles and sacks of flats; and mixed ADC trays and mixed AADC trays of letters, may be sorted to NDC pallets according to the "label to" ZIP Code in L010. All mixed ADC bundles, sacks, and trays and mixed AADC trays must contain only pieces destinating within the NDC as shown in L601. Labeling:

1. Line 1: L601.
2. Line 2: For flats and irregular parcels, "STD" followed by "FLTS" or "IRREG," as applicable; followed by "NDC"; followed by "BARCODED" (or "BC") if pallet contains automation price mail; followed by "NONBARCODED" (or "NBC") if pallet contains carrier route and/or Presorted price mail. For letters, "STD LTRS NDC"; followed by "BC" if pallet contains barcoded letters; followed by "MACH" if pallet contains machinable letters; followed by "MAN" if pallet contains nonmachinable letters.

h. Mixed NDC, optional, permitted for sacks and trays only. Pallet may contain carrier route, automation, and/or Presorted mail. Mailers must place trays and sacks containing pieces paid at the single-piece price on the mixed NDC pallet (unless required to be presented separately by special postage payment authorization). Labeling:

1. Line 1: "MXD" followed by information in L601, Column B, for NDC serving 3-digit ZIP Code prefix of entry Post Office (label to plant serving entry Post Office if authorized by processing and distribution manager).
2. Line 2: For flats and irregular parcels, "STD" followed by "FLTS" or "IRREG," as applicable; followed by "BARCODED" (or "BC") if pallet contains automation price mail; followed by "NONBARCODED" (or "NBC") if pallet contains carrier route and/or Presorted price mail; followed by "WKG." For letters, "STD LTRS"; followed by "BC" if pallet contains barcoded letters; followed by "MACH" if pallet contains machinable letters; followed by "MAN" if pallet contains nonmachinable letters; followed by "WKG."

8.10.4 Package Services Flats—Bundles and Sacks

Pallets must be prepared under 8.0 in the sequence listed below and completed at each required level before the next optional or required level is prepared. Unless indicated as optional, all sort levels are required under the conditions shown. Carrier route mail and Presorted price mail with a barcode apply only to Bound Printed

Matter mailings. Destination entry price eligibility also applies only to Bound Printed Matter (see 266 for flats). At the mailer's option, all Package Services flats may be prepared for destination entry. For mailings of sacks on pallets, pallet preparation begins with 8.10.4b. Label pallets under 8.6 and according to the Line 1 and Line 2 information listed below:

a. *5-digit scheme carrier routes,* required, permitted for bundles only. Pallet must contain only carrier route bundles for the same 5-digit scheme under L001. For 5-digit destinations not part of L001, 5-digit carrier routes pallet preparation begins with 8.10.4b. Labeling:

   1. Line 1: L001.
   2. Line 2: "PSVC FLTS"; followed by "CARRIER ROUTES" (or "CR-RTS"); followed by "SCHEME" (or "SCH").

b. *5-digit carrier routes,* required, permitted for bundles and sacks. Pallet must contain only carrier route mail for the same 5-digit ZIP Code. Labeling:

   1. Line 1: city, state, and 5-digit ZIP Code destination (see 8.6.4c for overseas military mail).
   2. Line 2: "PSVC FLTS"; followed by "CARRIER ROUTES" (or "CR-RTS").

c. *5-digit,* required, permitted for bundles and sacks. Pallet must contain only Presorted price mail with or without a barcode for the same 5-digit ZIP Code or same 5-digit scheme under L007 (for automation-compatible flats only under 201.3.0). Five-digit scheme bundles are assigned to pallets according to the "label to" 5-digit ZIP Code in L007. Labeling:

   1. Line 1: city, state, and 5-digit ZIP Code destination (see 8.6.4c for overseas military mail).
   2. Line 2: "PSVC FLTS 5D"; followed by "BARCODED" (or "BC") if pallet contains Presorted price mail with a barcode; followed by "NONBARCODED" (or "NBC") if pallet contains Presorted price mail without a barcode.

d. *3-digit,* optional, option not available for bundles for 3-digit ZIP Code prefixes marked "N" in L002. Pallet may contain mail with or without a barcode for the same 3-digit ZIP Code or the same 3-digit scheme under L008 (for automation-compatible flats only under 201.3.0). Three-digit scheme bundles are assigned to pallets according to the "label to" 3-digit ZIP Code in L008. Labeling:

   1. Line 1: L002, Column A.
   2. Line 2: "PSVC FLTS 3D"; followed by "BARCODED" (or "BC") if pallet contains Presorted price mail with a barcode; followed by "NONBARCODED" (or "NBC") if pallet contains carrier route and/or Presorted price mail without a barcode.

e. *SCF,* required, permitted for bundles and sacks. Pallet may contain carrier route and/or Presorted price mail with or without a barcode for the 3-digit ZIP Code groups in L005. Labeling:

   1. Line 1: L002, Column C.

2. Line 2: “PSVC FLTS SCF”; followed by “BARCODED” (or “BC”) if pallet contains Presorted price mail with a barcode; followed by “NONBARCODED” (or “NBC”) if pallet contains carrier route and/or Presorted price mail without a barcode.

f. *ASF,* required, permitted for bundles and sacks. Pallet may contain carrier route and/or Presorted price mail with or without a barcode for the 3-digit ZIP Code groups in L602. ADC bundles or sacks are assigned to pallets according to the “label to” ZIP Code in L004. At the mailer’s option, appropriate mixed ADC bundles or sacks may be sorted to ASF pallets according to the “label to” ZIP Code in L010. All mixed ADC bundles and sacks must contain only pieces destinating within the ASF as shown in L602. Labeling:

1. Line 1: L602.
2. Line 2: “PSVC FLTS ASF”; followed by “BARCODED” (or “BC”) if pallet contains Presorted price mail with a barcode; followed by “NONBARCODED” (or “NBC”) if pallet contains carrier route and/or Presorted price mail without a barcode.

g. *NDC,* required, permitted for bundles and sacks. Pallet may contain carrier route and/or Presorted price mail with or without a barcode for the 3-digit ZIP Code groups in L601. ADC bundles or sacks are assigned to pallets according to the “label to” ZIP Code in L004. At the mailer’s option, appropriate mixed ADC bundles or sacks may be sorted to NDC pallets according to the “label to” ZIP Code in L010. All mixed ADC bundles and sacks must contain only pieces destinating within the NDC as shown in L601. Labeling:

1. Line 1: L601.
2. Line 2: “PSVC FLTS NDC”; followed by “BARCODED” (or “BC”) if pallet contains Presorted price mail with a barcode; followed by “NONBARCODED” (or “NBC”) if pallet contains carrier route and/or Presorted price mail without a barcode.

h. *Mixed NDC,* optional, permitted for sacks only. Pallet may contain carrier route and/or Presorted price mail with or without a barcode. Labeling:

1. Line 1: “MXD” followed by information in L601, Column B, for NDC serving 3-digit ZIP Code prefix of entry Post Office (label to plant serving entry Post Office if authorized by processing and distribution manager).
2. Line 2: “PSVC FLTS WKG.”

8.10.5 Package Services Irregular Parcels—Bundles and Sacks

Pallets must be prepared under 8.0 in the sequence listed below and completed at each required level before the next optional or required level is prepared. Unless indicated as optional, all sort levels are required under the conditions shown. Carrier route (8.10.5a, 8.10.5b, 8.10.5d, and 8.10.5e) applies to Bound Printed Matter mailings only. Destination entry price eligibility applies only to Parcel Select (see 256) and Bound Printed Matter (see 466 for parcels). At the mailer’s option, all Package Services irregular parcels also may be prepared for destination entry (see 7.0). For mailings of sacks on pallets, pallet preparation begins with 8.10.5e. Label pallets under 8.6 and according to the Line 1 and Line 2 information listed below:

a. *Merged 5-digit scheme,* required, permitted for bundles only. Pallet must contain carrier route bundles and noncarrier route 5-digit bundles (Presorted price bundles) for the same 5-digit scheme under L001. For 5-digit destinations not part of L001, merged 5-digit pallet preparation begins with 8.10.5d. Labeling:

   1. Line 1: L001.
   2. Line 2: “PSVC IRREG CR/5D”; followed by “SCHEME” (or “SCH”).

b. *5-digit scheme carrier routes,* required, permitted for bundles only. Pallet must contain only carrier route bundles for the same 5-digit scheme under L001. For 5-digit destinations not part of L001, 5-digit carrier routes pallet preparation begins with 8.10.5e. Labeling:

   1. Line 1: L001.
   2. Line 2: “PSVC IRREG”; followed by “CARRIER ROUTES” (or “CR-RTS”); followed by “SCHEME” (or “SCH”).

c. *5-digit scheme,* required, permitted for bundles only. Pallet must contain only 5-digit bundles of Presorted price mail for the same 5-digit scheme under L001. For 5-digit destinations not part of L001, 5-digit pallet preparation begins with 8.10.5d. Labeling:

   1. Line 1: L001.
   2. Line 2: “PSVC IRREG 5D”; followed by “SCHEME” (or “SCH”).

d. *Merged 5-digit,* required, permitted for bundles only. Pallet must contain carrier route bundles and noncarrier route 5-digit bundles (Presorted price bundles) for the same 5-digit ZIP Code. Labeling:

   1. Line 1: city, state, and 5-digit ZIP Code destination (see 8.6.4c for overseas military mail).
   2. Line 2: “PSVC IRREG CR/5D.”

e. *5-digit carrier routes,* required, permitted for bundles and sacks. Pallet must contain only carrier route mail for the same 5-digit ZIP Code. Labeling:

   1. Line 1: city, state, and 5-digit ZIP Code destination (see 8.6.4c for overseas military mail).
   2. Line 2: “PSVC IRREG”; followed by “CARRIER ROUTES” (or “CR-RTS”).

f. *5-digit,* required, permitted for bundles and sacks. Pallet must contain only Presorted price mail for the same 5-digit ZIP Code. Labeling:

   1. Line 1: city, state, and 5-digit ZIP Code destination (see 8.6.4c for overseas military mail).
   2. Line 2: “PSVC IRREG 5D.”

g. *3-digit,* optional, option not available for bundles for 3-digit ZIP Code prefixes marked “N” in L002. Pallet must contain parcels only for the same 3-digit ZIP Code. Labeling:

   1. Line 1: L002, Column A.

2. Line 2: “PSVC IRREG 3D.”

h. *SCF,* required, permitted for bundles and sacks. Pallet may contain carrier route and/or Presorted price mail for the 3-digit ZIP Code groups in L005. Labeling:

1. Line 1: L002, Column C.
2. Line 2: “PSVC IRREG SCF.”

i. *ASF,* required, permitted for bundles and sacks. Pallet may contain carrier route and/or Presorted price mail for the 3-digit ZIP Code groups in L602. ADC bundles or sacks are assigned to pallets according to the “label to” ZIP Code in L004. At the mailer’s option, appropriate mixed ADC bundles or sacks may be sorted to ASF pallets according to the “label to” ZIP Code in L010. All mixed ADC bundles and sacks must contain only pieces destinating within the ASF as shown in L602. Labeling:

1. Line 1: L602.
2. Line 2: “PSVC IRREG ASF.”

j. *NDC,* required, permitted for bundles and sacks. Pallet may contain carrier route and/or Presorted price mail for the 3-digit ZIP Code groups in L601. ADC (L004) bundles or sacks are assigned to pallets according to the “label to” ZIP Code in L004. At the mailer’s option, appropriate mixed ADC bundles or sacks may be sorted to NDC pallets according to the “label to” ZIP Code in L010. All mixed ADC bundles and sacks must contain only pieces destinating within the NDC as shown in L601. Labeling:

1. Line 1: L601.
2. Line 2: “PSVC IRREG NDC.”

k. *Mixed NDC,* optional, permitted for sacks only. Pallet may contain carrier route and/or Presorted price mail. Labeling:

1. Line 1: “MXD” followed by information in L601, Column B, for NDC serving 3-digit ZIP Code prefix of entry Post Office (or labeled to plant serving entry Post Office if authorized by processing and distribution manager).
2. Line 2: “PSVC IRREG WKG.”

8.10.6 Combined Mailings of Standard Mail Marketing Parcels 6 ounces or more, Standard Mail, Package Services, and Parcel Select Machinable Parcels

Prepare pallets under 8.0 in the sequence below. Unless indicated as optional, all sort levels are required. Combined mailings of Standard Mail Marketing parcels, Standard Mail, Parcel Select, and Package Services machinable parcels also must meet the standards in 6.0 or 21.0. Label pallets according to Line 1 and Line 2 information below and under applicable standards 8.6. Preparation sequence and labeling:

a. *5-digit scheme, required.* Pallet must contain parcels for the same 5-digit scheme under L606. For 5-digit destinations not part of L606, or for which scheme sorts are not performed, prepare 5-digit pallets under 8.10.6b. Labeling:

1. Line 1: Use L606.
2. Line 2: “STD/PSVC MACH 5D”; followed by “SCHEME” (or “SCH”).

b. *5-digit, required.* Pallet must contain parcels only for the same 5-digit ZIP Code. Labeling:

1. Line 1: city, state, and 5-digit ZIP Code destination (see 8.6.4c for overseas military mail).
2. Line 2: “STD/PSVC MACH 5D.”

c. *ASF, optional, but required for DNDC prices.* Not available for the Buffalo NY ASF in L602. Pallets must contain only parcels for the 3-digit ZIP Code groups in L602. Labeling:

1. Line 1: Use L602.
2. Line 2: “STD/PSVC MACH ASF.”

d. *NDC, required.* Pallets must contain only parcels for the 3-digit ZIP Code groups in L601. Labeling:

1. Line 1: Use L601.
2. Line 2: “STD/PSVC MACH NDC.”

e. *Mixed NDC, optional.* Labeling:

1. Line 1: “MXD” followed by information in L601, Column B, for NDC serving 3-digit ZIP Code prefix of entry Post Office (or labeled to plant serving entry Post Office if authorized by processing and distribution manager).
2. Line 2: “STD/PSVC MACH WKG.”

8.10.7 Machinable Parcels—Standard Mail, Including Marketing Parcels 6 ounces or more, and Parcel Select Lightweight

Mailers who palletize machinable parcels must make pallets or pallet boxes when there are 250 pounds or more for the destination levels below for DNDC, DSCF, or DDU prices. When prepared at origin, a 200-pound minimum is required for the NDC price. Prepare pallets under 8.0 in the sequence below. Unless indicated as optional, all sort levels are required. Label pallets under applicable standards in 8.6 and according to Line 1 and Line 2 information below:

a. *5-digit scheme*, required. Pallet must contain parcels for the same 5-digit scheme under L606. For 5-digit destinations not part of L606, prepare 5-digit pallets under 8.10.7b , Labeling:

1. Line 1: Use L606.
2. Line 2: “STD/PSLW MACH 5D.”

b. *5-digit*, required. Pallet must contain parcels only for the same 5-digit ZIP Code. Labeling:

1. Line 1: city, state, and 5-digit ZIP Code destination (see 8.6.4c for overseas military mail).
2. Line 2: “STD/PSLW MACH 5D.”

c. *ASF*, optional, but required for DNDC prices. Not available for the Buffalo NY ASF in L602. Pallets must contain only parcels for the 3-digit ZIP Code groups in L602. Labeling:

   1. Line 1: Use L602.
   2. Line 2: "STD/PSLW MACH ASF."

d. *NDC*, required. Pallets must contain only parcels for the 3-digit ZIP Code groups in L601. Labeling:

   1. Line 1: Use L601.
   2. Line 2: "STD/PSLW MACH NDC."

e. *Origin NDC* (required); no minimum; labeling:

   1. Line 1: L601, Column B.
   2. Line 2: "STD/PSLW MACH NDC."

f. *Mixed NDC*, optional; no minimum. Labeling:

   1. Line 1: "MXD" followed by information in L601, Column B, for NDC serving 3-digit ZIP Code prefix of entry Post Office (or labeled to plant serving entry Post Office if authorized by processing and distribution manager).
   2. Line 2: "STD/PSLW MACH WKG."

8.10.8 Irregular Parcels Weighing 2 Ounces or More—Standard Mail, Including Marketing Parcels, and Parcel Select Lightweight

Mailers who palletize unbundled or unsacked irregular parcels must make pallets or pallet boxes when there are 250 pounds or more for the destination levels below for DNDC, DSCF, or DDU prices. When prepared at origin, a 200 pound minimum is required for the NDC price. Prepare pallets or pallet boxes of irregular parcels (except tubes, rolls, and similar pieces) weighing 2 ounces or more under 8.0 and in the sequence listed below. Label pallets or pallet boxes according to the Line 1 and Line 2 information listed below and under 8.6. Mailers may not prepare tubes, rolls, and similar pieces or pieces that weigh less than 2 ounces on pallets or in pallet boxes, except for pieces in carrier route bundles or in sacks under 8.10.3. Use 8.10.3 for preparation of Parcel Select Lightweight tubes, rolls and similar pieces, and pieces weighing less than 2 ounces. Preparation sequence and labeling:

a. *5-digit scheme*, required. Pallet or pallet box must contain parcels only for the same 5-digit scheme under L606. For 5-digit destinations not part of L606 prepare 5-digit pallets under 8.10.8b. Labeling:

   1. Line 1: Use L606.
   2. Line 2: "STD/PSLW IRREG 5D"; followed by "SCHEME" (or "SCH").

b. *5-digit*, required. Pallet or pallet box must contain parcels only for the same 5-digit ZIP Code. Labeling:

   1. Line 1: city, state, and 5-digit ZIP Code destination (see 8.6.4c for overseas military mail).
   2. Line 2: "STD/PSLW IRREG 5D."

c. *SCF*, required. Allowed only for mail deposited at a DSCF to claim SCF price; labeling:

1. For Line 1, L002, Column C.
2. For Line 2, "STD/PSLW IRREG SCF."

d. *ASF*, optional, but required for DNDC prices. Not available for the Buffalo NY ASF in L602. Pallets must contain only parcels for the 3-digit ZIP Code groups in L602. Labeling:

1. Line 1: Use L602.
2. Line 2: "STD/PSLW IRREG ASF."

e. *NDC*, required. Pallets must contain only parcels for the 3-digit ZIP Code groups in L601. Labeling:

1. Line 1: Use L601.
2. Line 2: "STD/PSLW IRREG NDC."

f. *Origin NDC* (required); no minimum; labeling:

1. Line 1: L601, Column B.
2. Line 2: "STD/PSLW IRREG NDC."

g. *Mixed NDC*, optional. Labeling:

1. Line 1: "MXD" followed by information in L601, Column B, for NDC serving 3-digit ZIP Code prefix of entry Post Office (or labeled to plant serving entry Post Office if authorized by processing and distribution manager).
2. Line 2: "STD/PSLW IRREG WKG."

8.11 Bundle Reallocation to Protect SCF Pallet for Periodicals Flats and Irregular Parcels and Standard Mail Flats on Pallets

8.11.1 Basic Standards

Bundle reallocation to protect the SCF pallet is an optional preparation method (if performed, bundle reallocation must be done for the entire mailing job); only PAVE-certified presort software may be used to create pallets under the standards in 8.11.2 through 8.11.4. Presort software determines if mail for an SCF service area would fall beyond the SCF level if all finer level pallets are prepared. Reallocation is performed only when there is mail for the SCF service area that would fall beyond the SCF pallet level (e.g., to an ADC or NDC pallet). The amount of mail required to bring the mail that would fall beyond the SCF level back to an SCF level is the minimum volume that will be reallocated.

8.11.2 General Rules

Reallocation rules are as follows:

a. Bundle preparation is not affected by the reallocation process. Reallocate only complete bundles and only the minimum number of bundles necessary to create an SCF pallet meeting the minimum pallet weight. Based on the weight of individual pieces within a bundle and bundling parameters, the weight of mail that is reallocated may be slightly more than the minimum volume required to create an SCF pallet.

b. Reallocate bundles from the highest (least fine) pallet level possible. If it is not possible to reallocate some mail from a 3-digit pallet first, then attempt to eliminate a 3-digit pallet and reallocate all mail from that pallet to create an SCF pallet; if mail cannot be reallocated from a 3-digit pallet, then attempt to reallocate some mail from any 5-digit level pallet.

c. The reallocation process may result in the elimination of a 3-digit pallet to create an SCF pallet, but a 5-digit level pallet may not be eliminated to create an SCF pallet.

d. When reallocating mail to create an SCF pallet, reallocate mail from only one more finely sorted pallet. This may be accomplished by reallocating a portion of a 3-digit pallet, reallocating all mail from a 3-digit pallet, or reallocating a portion of one of the following pallets: 5-digit, 5-digit carrier routes, merged 5-digit, 5-digit scheme, 5-digit scheme carrier routes, or merged 5-digit scheme.

e. Mailers may use any minimum pallet weight(s) permitted by standards and may use different minimum weights for different pallet levels in conjunction with bundle reallocation.

8.11.3 Reallocation of Bundles If Optional 3-Digit Pallets Are Prepared

Reallocation rules are as follows:

a. Attempt to identify a 3-digit pallet of adequate weight that can support reallocation of one or more bundles to bring the mail that has fallen through the SCF level back to the SCF level without eliminating the pallet. A sufficient volume of mail must remain on the 3-digit pallet after reallocation to meet the 3-digit pallet weight minimum established by the mailer in compliance with applicable standards. If a 3-digit pallet of adequate weight is available, create an SCF pallet by combining the reallocated mail from the 3-digit pallet with the mail that would fall beyond the SCF pallet level.

b. If no single 3-digit pallet within the SCF service area contains an adequate volume of mail to allow reallocation of a portion of the mail on a pallet as described in the previous step, then eliminate one 3-digit pallet and reallocate all of the mail to create an SCF pallet by combining it with the mail that would fall beyond the SCF pallet level. As a result, the software will not prepare one 3-digit pallet for the SCF service area if it is detrimental to the SCF pallet.

c. If preparation is under 8.0 and there are no 3-digit pallets, attempt to identify a 5-digit level pallet of adequate weight to support reallocation of one or more bundles to bring the mail that would fall beyond the SCF pallet level back to the SCF level. If preparation is under 10.0, 12.0, or 13.0 and there are no 3-digit pallets, attempt to identify a 5-digit level pallet of adequate weight to support reallocation of one or more bundles to bring the mail that would fall beyond the SCF pallet level back to the SCF level. A sufficient volume of mail must remain on the applicable pallet after reallocation to meet the pallet weight minimum established by the mailer in compliance with applicable standards. If a 5-digit level pallet of adequate weight is available, create an SCF pallet by combining the reallocated bundles with the mail that would fall beyond the SCF pallet level.

d. If no single 5-digit level pallet within the SCF service area contains an adequate volume of mail to allow reallocation of a portion of the mail on a pallet as described in 8.11.3c, then no bundles will be reallocated and an SCF pallet will not be prepared; the mail that falls beyond the SCF pallet level must be placed on the next appropriate pallet (ADC, ASF, or NDC) or in the next appropriate sack.

8.11.4 Reallocation of Bundles If Optional 3-Digit Pallets Are Not Prepared

Reallocation rules are as follows:

a. Attempt to identify a 5-digit level pallet of adequate weight to support reallocation of one or more bundles to bring the mail that would fall beyond the SCF pallet level back to the SCF level. A sufficient volume of mail must remain on the 5-digit level pallet after reallocation to meet the pallet weight minimum established by the mailer in compliance with applicable standards. If a 5-digit level pallet of adequate weight is available, create an SCF pallet by combining the reallocated bundles with the mail that would fall beyond the SCF pallet level.

b. If no single 5-digit level pallet within the SCF service area contains an adequate volume of mail to allow reallocation of a portion of the mail on a pallet as described in 8.11.4a, then no bundles will be reallocated and an SCF pallet will not be prepared; the mail that falls beyond the SCF pallet level must be placed on the next appropriate pallet (ADC, ASF, or NDC) or in the next appropriate sack.

8.11.5 Documentation

Mailings must be supported by documentation produced by PAVE-certified software meeting the standards in 708.1.0.

8.12 Bundle Reallocation to Protect ADC Pallet for Periodicals Flats and Irregular Parcels on Pallets

8.12.1 Basic Standards

Bundle reallocation to protect the ADC pallet is an optional preparation method authorized for mailers using PAVE-certified presort software and may be used to create pallets under the standards in 8.12.2 and 8.12.3. Presort software determines if mail for an ADC service area falls beyond the ADC level if all finer level pallets are prepared. Reallocation is performed only when there is mail for the ADC service area that falls beyond the ADC pallet level (e.g., to sacks). Reallocate only the minimum number of bundles necessary to create an ADC pallet at the minimum required weight.

8.12.2 General Rules

Reallocation rules are as follows:

a. Bundle preparation is not affected by the reallocation process. Reallocate only complete bundles and only the minimum number of bundles necessary to create an ADC pallet meeting the minimum pallet weight. Based on the weight of individual pieces within a bundle and bundling parameters, the weight of mail that is reallocated may be slightly more than the minimum volume required to create an ADC pallet.

b. Reallocate only bundles of an SCF pallet from the same city and state as the ADC (L005, Column B). This may be accomplished by reallocating a portion of the bundles from an SCF pallet or reallocating all mail from the SCF pallet. Bundles may be reallocated from a protected SCF (PSCF) pallet prepared under 8.11.

c. Mailers may use any minimum pallet weight(s) permitted by standards and may use different minimum weights for different pallet levels in conjunction with bundle reallocation.

8.12.3 Documentation

Mailings must be supported by documentation produced by PAVE-certified software meeting the standards in 708.1.0.

8.13 Bundle Reallocation to Protect NDC Pallet for Standard Mail Flats on Pallets

8.13.1 Basic Standards

Bundle reallocation to protect the NDC pallet level is an optional preparation method (if performed, bundle reallocation must be done for the complete mailing job); only PAVE-certified presort software may be used to create pallets under the standards in 8.13.2 through 8.13.4. The software will determine if mail for a NDC service area would fall beyond the NDC level when ASF pallets are prepared. Reallocation is performed only when there is mail for the NDC service area that would fall beyond the NDC pallet level as a result of an ASF pallet being prepared. The amount required to bring the mail back to the NDC level is the minimum volume that would be reallocated from an ASF pallet, when possible. The following “parent” NDCs can be protected with bundle reallocation by using mail from the ASF “child” pallets indicated in Exhibit 8.13.1.

Exhibit 8.13.1 “Parent” NDC/“Child” ASF

“PARENT” NDC SERVICE AREAS	“CHILD” ASF ZIP CODE AREAS SERVED
Pittsburgh NDC	Buffalo ASF: 130-136; 140-149
Denver NDC	Albuquerque ASF: 865, 870-875, 877-879, 881-884 Phoenix ASF: 850-853, 855, 859, 860, 863, 864 Salt Lake City ASF: 832-834, 836, 837, 840-847, 898, 979 Billings ASF: 590-599, 821
Dallas NDC	Oklahoma City ASF: 730, 731, 734-738, 740, 741, 743-746, 748, 749
Des Moines NDC	Sioux Falls ASF: 570-577
Minneapolis NDC	Fargo ASF: 565, 567, 580-588

8.13.2 General Rules

In general, when reallocating:

a. The reallocation process does not affect bundle preparation. Reallocate only complete bundles and only the minimum number of bundles necessary to create a NDC pallet that meets the minimum pallet weight. Based on the weight

of individual pieces within a bundle and bundling parameters, the weight of mail that is reallocated may be slightly more than the minimum volume required to create a NDC pallet.

b. Use Exhibit 8.13.1 to reallocate bundles from the ASF pallet to create a NDC pallet. The ASF pallet may be eliminated to protect the NDC pallet.

c. Reallocate mail only from one ASF pallet. Bundle reallocation is to be used only between the "parent" NDC and the "child" ASF. Mail from finer levels of pallets (e.g., SCF pallets) may not be reallocated.

d. Mailers may use any minimum pallet weight(s) permitted by standard and may use different minimum weights for different pallet levels in conjunction with bundle reallocation.

8.13.3 Reallocation of Bundles From ASF Pallets

When reallocating bundles from ASF pallets:

a. Use Exhibit 8.13.1 to identify an ASF pallet of adequate weight that can support reallocation of one or more bundles to bring the mail that has fallen through the NDC level back to the NDC level without eliminating the ASF pallet. A sufficient amount of mail must remain on the ASF pallet after reallocation to meet the minimum ASF pallet weight. If an ASF pallet of adequate weight is available, then create a NDC pallet by combining the reallocated mail from the ASF pallet with the mail that would fall beyond the NDC pallet level.

b. If no single ASF pallet within the NDC service area contains an adequate volume of mail to allow reallocation of the portion of the mail on a pallet as described in 8.13.3a, then eliminate one ASF pallet and reallocate all of the mail to create a NDC pallet.

8.13.4 Documentation

Mailings must be supported by documentation produced by PAVE-certified software meeting the standards in 708.1.0.

8.14 Pallets of Bundles, Sacks, and Trays

8.14.1 Periodicals

Additional pallet preparation:

a. *Combined mailings.* When two or more publications are part of a combined mailing, the mailer must keep records for each mailing (publication) as required by standard.

b. *Destination Delivery Unit prices.* Pieces claimed at destination delivery unit prices do not require separation from pieces claimed at other prices on the same pallet.

c. *Carrier route mail on separate 5-digit pallets.* Carrier route sorted pieces must be prepared on separate 5-digit pallets (5-digit carrier routes or 5-digit scheme carrier routes pallets). *Exception:* When flats are prepared as bundles on pallets under 10.0, 12.0, or 13.0, then carrier route mail, 5-digit machinable barcoded price mail, and 5-digit machinable nonbarcoded price mail may be placed on the same merged 5-digit pallet or on the same merged 5-digit scheme pallet for those 5-digit ZIP Codes for which 1) there are "A" or "C" indicators in the City

State Product under 10.0, or 2) the 5-digit bundles are within the 5% threshold requirement under 12.0, or 3) the 5-digit bundles are either all for 5-digit ZIP Codes that have an "A" or "C" indicator in the City State Product or are for 5-digit ZIP Codes with a "B" or "D" indicator in the City State Product and the pieces in such 5-digit bundles meet the 5% threshold under 13.0.

8.14.2 Standard Mail

Additional pallet preparation:

a. *Combined mailings.* Nonprofit Standard Mail may be included in the same mailing or palletized on the same pallet as Regular Standard Mail only as permitted by standard. Mailers may include machinable parcels, irregular parcels, and Not Flat-Machinable pieces on 5-digit pallets.

b. *Destination Delivery Unit prices.* Pieces claimed at destination delivery unit prices do not require separation from pieces claimed at other prices on the same pallet.

c. *Carrier route mail on separate 5-digit pallets.* Carrier route price pieces must be prepared on separate 5-digit pallets (5-digit carrier routes or 5-digit scheme carrier routes pallets) from automation price and/or Presorted price pieces (prepared on 5-digit pallets or 5-digit scheme pallets). *Exception:* When flat-size pieces are prepared as bundles on pallets under 10.0, 12.0, or 13.0, then carrier route sorted mail, 5-digit sorted automation price mail, and 5-digit sorted Presorted price mail may be placed on the same merged 5-digit pallet or on the same merged 5-digit scheme pallet for those 5-digit ZIP Codes for which 1) there are "A" or "C" indicators in the City State Product under 10.0, or 2) the 5-digit bundles are within the 5% threshold requirement under 12.0, or 3) the 5-digit bundles are either all for 5-digit ZIP Codes that have an "A" or "C" indicator in the City State Product, or are for 5-digit ZIP Codes with a "B" or "D" indicator in the City State Product and the pieces in such 5-digit bundles meet the 5% threshold under 13.0.

8.14.3 NDC and Mixed NDC Pallets

Bundles placed on NDC pallets must be machinable on NDC parcel sorting equipment. Line 2 on pallet labels must reflect the processing category of the pieces. A NDC or mixed NDC (trays and sacks only) pallet may include pieces that are eligible for the DNDC price and others that are ineligible.

8.14.4 Commingled Zones

Pieces of Parcel Select and Package Services for different zones may be commingled only under 255.1.7 for Parcel Select parcels or 265.5.3.3 or 265.6.3.3 for Bound Printed Matter flats or 265.5.1 or 265.6.1 for Bound Printed Matter parcels.

8.14.5 Securing Trays

Trays must be sleeved and strapped under 235.3.0 for First-Class Mail letters, 245.3.0 for Standard Mail letters, 235.3.0 for First-Class Mail flats, 245.3.0 for Standard Mail flats, 265.3.0 for Bound Printed Matter flats, or 275.3.0 for Media Mail flats and Library Mail flats, *except that* strapping is not required for any letter tray placed on a 5-digit, 3-digit, or SCF pallet secured with stretchwrap. In addition,

if the processing and distribution manager gives a written waiver, strapping is not required for any letter tray that originates and destinates in the same SCF (mail processing plant) service area.

8.15 Sacks

All sacks remaining after all pallets are prepared may be presented with the palletized mailing (on the same postage statement) if the sacks are set apart from the palletized portion of the mailing.

8.16 Copalletized Letter-size and Flat-size Pieces—Periodicals or Standard Mail

8.16.1 Basic Standards

Copalletized letter- and flat-size mailings must meet the applicable standards in 8.0. In addition, if copalletized under 10.0, 12.0, or 13.0, the applicable provisions of that preparation option must also be met. Any combination of automation mailings and nonautomation mailings is subject to the restrictions in 8.14. Trays and bundles in a copalletized mailing qualify for the appropriate presort level price, regardless of the pallet level on which they are placed. Mailers participating in copalletized mailings must:

a. Transmit postage statements and mailing documentation to the USPS using an approved electronic method.

b. In accordance with 708.6.3 and 708.6.4, use Intelligent Mail tray labels on trays and sacks and Intelligent Mail container placards on pallets or similar containers.

c. If consolidating multiple mailings on pallets, update the electronic data for each of the original mailings. This updated data must be reflected in the electronic data transmitted to the USPS by the consolidator.

d. Meet postage payment requirements as specified by Business Mailer Support.

8.16.2 Periodicals

Additional standards are as follows:

a. Periodicals eligible for preferred prices (In-County, Nonprofit, Classroom, and Science-of-Agriculture) may be combined with Periodicals eligible for Outside-County prices.

b. All pallets in a copalletized mailing are identified on the content line (Line 2) of the label with only “NEWS” (see 8.6) or “PER” as the class designation under these conditions:

   1. If at least 51% of the total number of copies in the copalletized mailing can qualify for “NEWS” treatment, then all pallets in such a mailing are labeled “NEWS,” unless the mailer chooses to use “PER.”

   2. If less than 51% of the total number of copies in a copalletized mailing can qualify for “NEWS” treatment, then all pallets in such a mailing are labeled “PER.”

c. Documentation meeting the basic standard in 708.1.0 must be provided with each mailing. Before copalletizing, the mailer must obtain the written approval of the Business Mailer Support manager. Approval is based on the mailer's demonstrated ability to provide documentation meeting these standards:

   1. Documentation by bundle and by publication and edition showing the number of addressed pieces and copies in each bundle and the per piece presort price claimed, or a listing by pallet showing (by presort level and destination) the number of copies and pieces for each publication and edition. For large volume mailing jobs reported on a single listing, the mailer may provide the abbreviated documentation in 708.b

   2. Documentation showing the number of copies and pieces claimed at the SCF price.

   3. Documentation showing that bundles are sorted to the appropriate finest pallet level in the mailing.

   4. Documentation showing that 5-digit, 3-digit, SCF, and ADC pallets are prepared when the applicable minimum volume is developed in the copalletized mailing for these destinations.

   5. A listing showing the destination of pallets in the copalletized mailing.

   6. If the sacked portion of the mailing is presented with the copalletized portion, a report by sack showing the number of pieces (and copies) at each presort level.

d. Postage for copalletized mailings of flat-size Periodicals must be paid at the consolidator's site.

8.16.3 Standard Mail

Additional standards are as follows:

a. Nonprofit Standard mailings may be copalletized with one another but not with mailings at other prices unless permitted by standard.

b. Nonidentical-weight pieces may be copalletized only if the correct postage is affixed to each piece or if otherwise authorized by Business Mailer Support.

c. All pieces in mailings to be copalletized must be subject to the minimum per piece price, or all subject to the per pound price, unless otherwise authorized by Business Mailer Support.

d. All pieces must have postage paid with permit imprint, or all pieces must have postage affixed.

e. When requested, the mailer must present pallets selected by USPS employees for verification.

f. Origin mailers participating in a copalletized mailing of Standard Mail letters in trays must prepare a separate postage statement for the portion entered at the origin site and another postage statement for the portion directed to the consolidator.

8.16.4 Pallet Labels

Pallet labels for copalletized mailings must meet the provisions of 8.6 and 8.10, or if applicable, 8.6 and 10.0, 12.0, or 13.0.

8.16.5 Postage Statement

Separate postage statements are required:

a. For Periodicals, a separate postage statement is required for each publication and/or edition that is part of the copalletized mailing. The mailer must note on or in an attachment to the postage statement the name and issue date of the publications with which each publication and/or edition was copalletized.

b. For Standard Mail, a separate postage statement must be prepared for each mailing that is part of a single copalletized shipment, *except that* copalletized Regular and Enhanced Carrier Route mailings (or Nonprofit and Nonprofit Enhanced Carrier Route mailings) produced as part of the same job may be reported on the same postage statement.

8.17 Pallets of Machinable Parcels

8.17.1 DNDC Price

A NDC pallet may include pieces that are eligible for the DNDC price and pieces that are ineligible.

8.17.2 Top Caps

When top caps are used, the mailer must write the tare weight of the top cap on the pallet label or in another prominent location.

8.18 Parcel Select—Network Distribution Center (NDC) Presort Discount

8.18.1 Machinable Parcels

To qualify for the NDC Presort discount:

a. Machinable pieces must be sorted to NDCs under L601 in 69-inch pallet boxes. Each pallet box must contain at least 52 inches of mail (not including pallet) for a NDC. Overflow pallet boxes are not permitted. Preparation in sacks, directly on pallets, or in other containers is not permitted.

b. Pallet box preparation and Line 1 labeling: destination NDC (required); for Line 1 use L601.

c. Pallet box Line 2 labeling: “PSVC MACH NDC.”

8.18.2 Nonmachinable Parcels

To qualify for the NDC Presort discount:

a. Nonmachinable pieces must be sorted to NDCs and ASFs under L605 directly on pallets. Each pallet for a NDC or ASF destination must have a minimum height of 42 inches of mail (not including the height of the pallet). Overflow pallets are not permitted. Preparation in sacks, pallet boxes, or in other containers is not permitted.

b. Pallet preparation and Line 1 labeling: destination NDC or destination ASF, required; for Line 1, use L605.

c. Pallet Line 2 labeling: “PSVC NON MACH NDC” or “PSVC NON MACH ASF” as applicable.

8.19 Parcel Select—Origin Network Distribution Center (ONDC) Presort Discount

8.19.1 Machinable Parcels

To qualify for the ONDC Presort discount:

a. Machinable pieces must be sorted to NDCs under L601 in 69-inch pallet boxes. Each pallet box must contain at least 52 inches of mail (not including pallet) for a NDC. Overflow pallet boxes are not permitted. Preparation in sacks, directly on pallets, or in other containers is not permitted.

b. Pallet box preparation and Line 1 labeling: destination NDC, required; for Line 1, use L601.

c. Pallet box Line 2 labeling: “PSVC MACH NDC.”

8.19.2 Nonmachinable Parcels

To qualify for the ONDC Presort discount:

a. Nonmachinable pieces must be sorted to NDCs and ASFs under L605 directly on pallets. Each pallet for a NDC or ASF destination must have a minimum height of 42 inches of mail (not including the height of the pallet). Overflow pallets are not allowed. Preparation in sacks, pallet boxes, or in other containers is not permitted.

b. Pallet preparation and Line 1 labeling: destination NDC or destination ASF, required; for Line 1, use L605.

c. Pallet Line 2 labeling: “PSVC NON MACH NDC” or “PSVC NON MACH ASF” as applicable.

8.20 Parcel Select DSCF Prices—Parcels on Pallets

8.20.1 Basic Preparation, Parcels on Pallets

Unless prepared under 8.20.2, or in sacks, mail must be prepared for the DSCF price as follows:

a. *General.* Parcels for each SCF area must be sorted to 5-digit scheme, 5-digit, or 3-digit (nonmachinable) destinations on pallets. For purposes of this section, the term “pallets” includes preparation of parcels directly on pallets and in pallet boxes on pallets. Except when prepared under 8.20.2, each 5-digit scheme, 5-digit, and 3-digit pallet must meet a minimum volume requirement under one of the criteria in 8.20.1b. Machinable and nonmachinable pieces may be combined on the same pallet or in the same overflow sack when sorted to 5-digit scheme or 5-digit destinations. In a single mailing mailers may prepare some pallets under the minimum volume requirement in 8.20.1b1 and some pallets under the minimum volume requirement in 8.20.1b2. A mailing entered at a destination SCF facility containing pallets prepared under 8.20.1 also may include mail that is sacked for the DSCF price. Double-stacking is permitted if the requirements of 8.3 are met.

b. *Minimum volume.* The minimum volume per 5-digit scheme, 5-digit, and 3-digit pallet can be met in one of the following ways:

1. Pieces may be placed on 5-digit scheme, 5-digit, and 3-digit pallets, each containing at least 50 pieces and 250 pounds.
2. Pieces may be placed on 5-digit scheme, 5-digit, and 3-digit pallets, each having a minimum height of 36 inches of mail (excluding the height of the pallet) (see 8.5.4).

c. *Overflow.* After filling a pallet(s) to a 5-digit scheme, 5-digit, or 3-digit destination, any remaining pieces that do not meet the minimum pallet requirements may be prepared in one or both of the following ways:

1. Placed in 5-digit scheme, 5-digit, or 3-digit overflow sacks (no minimum number of pieces per sack) that are labeled in accordance with the 5-digit scheme, 5-digit, or 3-digit sacking requirements for the DSCF price in 255.4.2. Overflow pieces sacked in this manner are eligible for the DSCF prices.
2. Placed on a 5-digit scheme, 5-digit, or 3-digit pallet labeled under 8.20.1d that does not meet the minimums for the DSCF price. Overflow pieces palletized in this manner are not eligible for the DSCF prices but are eligible for the DNDC prices.

d. *5-digit scheme.* Pallet labeling:

1. Line 1: use L606, Column B.
2. Line 2: “PSVC PARCELS 5D SCH.”

e. *5-digit.* Pallet labeling:

1. Line 1: use city, state, and 5-digit ZIP Code destination of contents.
2. Line 2: “PSVC PARCELS 5D.”

f. *3-digit.* Pallet labeling:

1. Line 1: use L002, Column C.
2. Line 2: “PSVC PARCELS 3D.”

g. *Separation.* If sacks prepared under 255 are included in the same mailing as pallets prepared under this section, at the time of acceptance the mailer must separate sacks that are overflow from palletized mail from those sacks that were prepared under the provisions of 255.

8.20.2 Alternate Preparation, Parcels on Pallets

DSCF price mailings not prepared under 8.20.1 may be prepared as follows:

a. *General.* All DSCF price mail in the mailing must be sorted to 5-digit scheme, 5-digit, or 3-digit nonmachinable destinations under 8.20.2 (i.e., mail prepared under 8.20.1 and mail sacked under 255.4.2 must not be included in a mailing prepared under 8.20.2). For purposes of this section, the term “pallets” includes preparation of parcels directly on pallets and in pallet boxes on pallets. Machinable and nonmachinable pieces may be combined on the same pallet. Double-stacking is permitted if the requirements of 8.3 are met.

b. *Minimum volume.* To qualify for the DSCF price, no pallet may contain fewer than 35 pieces and 200 pounds, and for the entire mailing the average number of DSCF price pieces per 5-digit scheme, 5-digit, or 3-digit destination must be at least 50.

c. *Overflow.* After filling pallets to a 5-digit scheme, 5-digit, or 3-digit destination, any remaining pieces that do not meet the minimum pallet requirements may be prepared in one or both of the following ways:

   1. Placed in 5-digit scheme, 5-digit, or 3-digit overflow sacks (no minimum number of pieces per sack) that are labeled in accordance with the DSCF sacking requirements in 255.4.2. Overflow pieces sacked in this manner are eligible for the DSCF prices.

   2. Placed on a 5-digit scheme, 5-digit, or 3-digit pallet labeled under 8.20.2d that does not meet the minimums for the DSCF price. Overflow pieces palletized in this manner are not eligible for the DSCF prices but are eligible for the DNDC prices.

d. *5-digit scheme.* Pallet labeling:

   1. Line 1: use L606, Column B.

   2. Line 2: “PSVC PARCELS 5D SCH.”

   3. In the mailer area below Line 3: use the pallet ID number.

e. *5-digit.* Pallet labeling:

   1. Line 1: city, state, and 5-digit ZIP Code destination of contents.

   2. Line 2: “PSVC PARCELS 5D.”

   3. In mailer area below line 3: use the pallet ID number.

f. *3-digit.* Pallet labeling:

   1. Line 1: use L002, Column C.

   2. Line 2: “PSVC PARCELS 3D.”

   3. In the mailer area below Line 3: use the pallet ID number.

g. *Documentation.* A list of each 5-digit scheme, 5-digit, and 3-digit pallet in the mailing that qualifies for the DSCF price must be submitted. The pallets in the mailing that qualify for the DSCF price must be renumbered sequentially, and this pallet identification number must be printed below Line 3 on the pallet label. The documentation must list each pallet in sequential order by pallet identification number. For each pallet, the listing must show: the pallet identification number, the applicable 5-digit scheme, 5-digit, or 3-digit destination of the pallet, the total weight of pieces on the pallet, the total number of pieces on the pallet, and the running total of pieces (i.e., the number equal to the number of pieces for that pallet plus the sum of the pieces on all pallets listed before it). This documentation must not include: pieces prepared in overflow sacks at the DSCF prices, pieces prepared on overflow pallets at the DNDC prices, or pieces claimed at any other price in the mailing.

8.20.3 5-Digit ZIP Codes for Which Pallets May Not Be Prepared

Refer to the Drop Shipment Product available from the National Customer Support Center (NCSC) (see 608.8.0) to determine if the facility serving the 5-digit ZIP Code destination can handle pallets. If a facility cannot handle pallets, the DSCF price is not applicable unless the mail can be prepared under the sacking requirement in 255.4.2.

8.21 Parcel Select DSCF Prices—Sacks on Pallets

Mailers who prepared DSCF price mail in 5-digit scheme or 5-digit sacks under 255.4.2 may place 5-digit sacks for the same SCF area on an SCF pallet (including a pallet box on a pallet). Mailers who prepare overflow from pallets under 8.20.1 or 8.20.2 may place 5-digit scheme or 5-digit sacks for the same SCF area on an SCF pallet (including a pallet box on a pallet). See 8.20.1g for requirements concerning separation of sacks prepared under 255.4.2 from sacks prepared under 8.20.1. There are no pallet minimums for such pallets. Mailers may prepare such SCF pallets without preparing all possible 5-digit scheme and 5-digit pallets. The pallets must be labeled in the following manner:

a. *5-digit scheme pallets,* optional; labeling:

   1. Line 1: use L606, Column B.
   2. Line 2: “PSVC PP 5D SCHEME” or “PSVC PP 5D SCH.”

b. *5-digit pallets,* labeling:

   1. Line 1: use L002, Column C.
   2. Line 2: “PSVC PP 5D.”

8.22 Parcel Select and Bound Printed Matter DDU Prices

Parcels may be bedloaded, sacked, or palletized. For purposes of this section the term “pallets” includes preparation of parcels directly on pallets and preparation of parcels in pallet boxes on pallets. There are no preparation or presort requirements for DDU price mailings other than separation by 5-digit scheme and 5-digit destination. Machinable and nonmachinable pieces may be combined. Refer to the Drop Shipment Product maintained by the National Customer Support Center (NCSC) (see 608.8.0) and the information in 255.4.1. If a DDU facility cannot handle pallets, and a mailer transports mail to the DDU facility on pallets, the driver must unload the pallets into a container specified by the delivery unit. If pieces are sacked or palletized, they must be prepared to 5-digit scheme (optional) and 5-digit destinations, and labeled as follows:

a. *5-digit scheme sacks or pallets,* optional; labeling:

   1. Line 1: use L606, Column B.
   2. Line 2: “PSVC PARCELS 5D SCH.”

b. *5-digit sacks or pallets,* labeling:

   1. Line 1: use city, state, and 5-digit ZIP Code destination of pieces.
   2. Line 2: “PSVC PARCELS 5D.”

9.0 Combining Bundles of Automation and Nonautomation Flats in Trays and Sacks

9.1 First-Class Mail

9.1.1 Basic Standards

Bundles of flats in an automation price mailing prepared under 235.6.5 must be cotrayed with bundles of flats in a Presorted price mailing under the following conditions:

a. The automation price pieces and Presorted price pieces are part of the same mailing job and reported on the same postage statement.

b. Pieces in the automation price mailing must meet the criteria for a flat under 201.3.0. Pieces in the Presorted price mailing must meet the criteria for a flat under 201.1.1.

c. The automation price mailing must meet the eligibility criteria in 233.5.0, except that the traying criteria in 9.1.4 must be met rather than the traying criteria in 235.6.0.

d. The Presorted price mailing must meet the eligibility criteria in 233.3.0, except that the traying and documentation criteria in 9.1.1 and 9.1.4 must be met rather than the traying and documentation criteria in 235.6.0.

e. The prices for pieces in the automation price mailing are applied based on the level of bundle to which they are sorted under 233.5.2 and 233.5.4.

f. The pieces must be marked according to 202.

g. The bundles prepared from the automation price mailing and the bundles prepared from the Presorted price mailing must be sorted into the same trays as described in 9.1.4.

h. A complete, signed postage statement, using the correct USPS form or an approved facsimile, must accompany each mailing job prepared under these procedures. In addition to the applicable postage statement, documentation produced by PAVE-certified software or standardized documentation under 708.1.0 must be submitted with each cotrayed mailing job that describes for each tray sortation level the number of pieces qualifying for each applicable automation price and the number of pieces qualifying for the Presorted price.

i. Barcoded tray labels under 708.6.0 must be used to label the trays.

9.1.2 Bundle Preparation

Except for mail prepared under the cobundling option in 9.1.3, the automation price mailing must be bundled and labeled under 235.6.5. The Presorted price mailing must be bundled and labeled under 235.5.0.

9.1.3 Optional Cobundling Preparation

As an option to the basic bundling requirements in 9.1.2, a mailer may choose to cobundle automation price and Presorted price flat-size pieces, subject to the conditions in 11.0.

9.1.4 Tray Preparation and Labeling

Presorted price and automation price bundles prepared under 9.1.2 or 9.1.3 must be presorted together into trays (cotrayed) in the sequence listed below. Trays must be labeled using the following information for Lines 1 and 2 and 235.4.0 for other sack label criteria.

a. *5-digit,* required, full trays only (no overflow trays); labeling:

   1. Line 1: use city, state, and 5-digit ZIP Code destination (see 235.4.0 for military mail).
   2. Line 2: "FCM FLTS 5D BC/NBC."

b. *3-digit,* required, full trays only (no overflow trays); labeling:

   1. Line 1: use L002, Column A.
   2. Line 2: "FCM FLTS 3D BC/NBC."

c. *Origin/entry 3-digit,* required for each 3-digit ZIP Code served by the SCF of the origin (verification) office, optional for each 3-digit ZIP Code served by the SCF of an entry office other than the origin office, no minimum; labeling:

   1. Line 1: use L002, Column A.
   2. Line 2: "FCM FLTS 3D BC/NBC."

d. *ADC,* required, full trays only (no overflow trays); use L004 to determine ZIP Codes served by each ADC; labeling:

   1. Line 1: use L004, Column B.
   2. Line 2: "FCM FLTS ADC BC/NBC."

e. *Mixed ADC,* required, no minimum; labeling:

   1. Line 1: use L201; for mail originating in ZIP Code areas in Column A, use "MXD" followed by the city, state, and 3-digit ZIP Code prefix in the corresponding row in Column C (use "MXD" instead of "OMX" in the destination line and ignore Column B).
   2. Line 2: "FCM FLTS BC/NBC WKG."

9.2 Periodicals

9.2.1 Basic Standards

Bundles of flat-size pieces in a machinable barcoded (automation) price mailing must be cosacked with bundles of flat-size pieces in a machinable nonbarcoded price mailing under the following conditions:

a. The pieces in the machinable barcoded price mailing and in the machinable nonbarcoded price mailing must be part of the same mailing job and must be reported on the appropriate postage statement(s).

b. The machinable barcoded price mailing must meet the eligibility criteria in 207.14.0, except that the sacking and documentation criteria in 9.2.1, 9.2.3, and 9.2.4 must be met rather than the sacking and documentation criteria in 207.25.0.

c. The machinable nonbarcoded price mailing must meet the eligibility criteria in 207.12.0, except that the sacking and documentation criteria in 9.2.1, 9.2.3, and 9.2.4 must be met rather than the sacking and documentation criteria in 207.25.0.

d. The bundles prepared from the machinable barcoded price mailing and the bundles prepared from the machinable nonbarcoded price mailing must be sorted into the same sacks as described in 9.2.3 and 9.2.4.

e. A complete, signed, appropriate postage statement(s), using the correct USPS form or an approved facsimile, must accompany each mailing job prepared under these procedures. In addition to the applicable postage statement, documentation produced by PAVE-certified software or standardized documentation under 708.1.0 must be submitted with each cosacked mailing job that describes for each sack sortation level the number of pieces qualifying for each applicable price.

f. Barcoded sack labels under 708.6.0 must be used to label sacks.

9.2.2 Bundle Preparation

The machinable barcoded price mailing must be bundled and labeled under 207.25.0 (all bundle levels) and the machinable nonbarcoded price mailing must be bundled and labeled under 207.22.0 (excluding carrier route bundles).

9.2.3 Bundles With Fewer Than Six Pieces

5-digit and 3-digit bundles prepared under 207.22.0 and 207.25.0 may contain fewer than six pieces when the publisher determines that such preparation improves service. These low-volume bundles may be placed in 5-digit, 3-digit, and SCF sacks that contain at least 24 pieces or on 5-digit, 3-digit, or SCF pallets. Pieces in low-volume bundles must claim the applicable mixed ADC price (Outside-County) or basic price (In-County).

9.2.4 Sack Preparation and Labeling

[4-7-14] Machinable barcoded price and machinable nonbarcoded price bundles must be presorted together into sacks (cosacked) in the sequence listed below. Sacks must be labeled using the following information for Lines 1 and 2 and 207.21.0 for other sack label criteria. If, due to the physical size of the mailpieces, the machinable barcoded price pieces are considered flat-size under 201.3.0 and the machinable nonbarcoded price pieces are considered irregular parcels under 201.1.0, the processing category shown on the sack label must show “FLTS.”

a. *5-digit/scheme,* scheme sort required only for pieces meeting the criteria in 201.3.0; required at 72 pieces, optional at 24 pieces minimum; labeling:

   1. Line 1: For 5-digit scheme sacks, use L007, Column B. For 5-digit sacks, use city, state, and 5-digit ZIP Code destination on pieces.

   2. Line 2: “PER” or “NEWS” as applicable and, for 5-digit scheme sacks, “FLT 5D SCH BC/NBC”; for 5-digit sacks, “FLT 5D BC/NBC.”

b. *3-digit,* required at 72 pieces, optional at 24 pieces minimum; labeling:

   1. Line 1: use L002, Column A.

   2. Line 2: “PER” or “NEWS” as applicable and “FLTS 3D BC/NBC.”

c. *SCF,* required at 72 pieces, optional at 24 pieces minimum; labeling:

1. Line 1: use L002, Column C.
2. Line 2: “PER” or “NEWS” as applicable and “FLTS SCF BC/NBC.”

d. *Origin/entry SCF,* required for the SCF of the origin (verification) office, optional for the SCF of an entry office other than the origin office, no minimum; labeling:

1. Line 1: use L002, Column C.
2. Line 2: “PER” or “NEWS” as applicable and “FLTS SCF BC/NBC.”

e. *ADC,* required at 72 pieces, optional at 24 pieces minimum; labeling:

1. Line 1: use L004, Column B.
2. Line 2: “PER” or “NEWS” as applicable and “FLTS ADC BC/NBC.”

f. *Origin mixed ADC,* required for any remaining pieces for destinations in L201, Column B, corresponding to the origin ZIP Code in Column A. There is no minimum for the number of pieces in the sack, but bundles of fewer than six pieces at 5-digit, 3-digit, and ADC bundle levels are not permitted.

1. Line 1: Use L201, Column C.
2. Line 2: “PER” or “NEWS” as applicable, followed by “FLTS WKG W FCM.”

g. *Mixed ADC,* required, no minimum, except that bundles of fewer than six pieces at 5-digit, 3-digit, and ADC bundle levels are not permitted. Labeling:

1. Line 1: use L009, Column B.
2. Line 2: “PER” or “NEWS” as applicable and “FLTS BC/NBC WKG.”

9.2.5 Optional Tray Preparation—Machinable Flat-Size Pieces

[4-7-14] As an option, mailers may place in flats trays (see 207.20.0) machinable pieces meeting the criteria in 201.3.0 that would normally be placed in sacks. Mailers must either bundle or group all pieces as specified in 207.25.0 and 207.22.0 for each 5-digit scheme, 5-digit, 3-digit scheme, 3-digit, SCF, and ADC destination. Bundling is not permitted unless it achieves a finer presort than the presort destination of the tray. The trays are subject to a container charge, and any bundles are subject to a bundle charge. Tray preparation, sequence, and labeling:

a. *5-digit scheme*, required at 72 pieces; optional at 24 pieces minimum, labeling:

1. Line 1: L007, Column B.
2. Line 2: “PER” or “NEWS” as applicable; followed by “FLTS”; followed by “5D SCH BC/NBC.”

b. *5-digit,* required at 72 pieces; optional at 24 pieces minimum, labeling:

1. Line 1: city, state, and 5-digit ZIP Code on mail (see 708.6.2.2 for overseas military mail).
2. Line 2: “PER” or “NEWS” as applicable; followed by “FLTS”; followed by “5D BC/NBC.”

c. *3-digit,* required at 72 pieces; optional at 24 pieces minimum, labeling:

1. Line 1: L002, Column A.

2. Line 2: “PER” or “NEWS” as applicable; followed by “FLTS”; followed by “3D BC/NBC.”

d. *SCF*, required at 72 pieces; optional at 24 pieces minimum, labeling:

1. Line 1: L002, Column C.
2. Line 2: “PER” or “NEWS” as applicable; followed by “FLTS”; followed by “SCF BC/NBC.”

e. *Origin SCF* (required) and *entry SCF(s)* (optional), no minimum, labeling:

1. Line 1: L002, Column C.
2. Line 2: “PER” or “NEWS” as applicable; followed by “FLTS”; followed by “SCF BC/NBC.”

f. *ADC*, required at 72 pieces; optional at 24 pieces minimum, now overflow tray allowed, labeling:

1. Line 1: use L004, Column B.
2. Line 2: “PER” or “NEWS” as applicable; followed by “FLTS”; followed by “ADC”; followed by “ BC/NBC.”

g. *Origin mixed ADC* (required), no minimum, for any remaining pieces for destinations in L201, Column B, of the origin ZIP Code in Column A, labeling:

1. Line 1: Use L201, Column C.
2. Line 2: “PER” or “NEWS” as applicable; followed by “FLTS”; followed by “WKG W FCM.”

h. *Mixed ADC* (required), no minimum, labeling:

1. Line 1: Use L009.
2. Line 2: “PER” “NEWS” as applicable; followed by “FLTS”; followed by “BC/NBC WKG.”

9.3 Standard Mail

9.3.1 Basic Standards

Bundles of flats in an automation price mailing must be cosacked with bundles of flats in a Presorted price mailing under the following conditions:

a. The automation price pieces and the Presorted price pieces are part of the same mailing job and are reported on the same postage statement.

b. Pieces in the automation price mailing must meet the criteria for a flat under 301.3.0. Pieces in the Presorted price mailing must meet the criteria for a flat under 301.1.1.

c. The automation price mailing must meet the eligibility criteria in 243.7.0, except that the sacking and documentation criteria in 9.3.1, 9.3.4, and 9.3.5 must be met rather than the sacking and documentation criteria in 245.7.0.

d. The Presorted price mailing must meet the eligibility criteria in 243.2.0 and 243.3.0, except that the sacking and documentation criteria in 9.3.1, 9.3.4, and 9.3.5 must be met rather than the sacking and documentation criteria in 245.5.0.

e. The prices for pieces in the automation price mailing are applied based on the number of pieces in the bundle and the level of bundle to which they are sorted under 243.7.0. The prices for pieces in the Presorted price mailing are based on the number of pieces in the bundle and the level of sack in which they are placed under 243.3.6 and 243.3.7.

f. The pieces must be marked according to 302.

g. The bundles prepared from the automation price mailing and the bundles prepared from the Presorted price mailing must be sorted into the same sacks as described in 9.3.4 and 9.3.5.

h. A complete, signed postage statement(s), using the correct USPS form or an approved facsimile, must accompany each mailing job prepared under these procedures. In addition to the applicable postage statement, documentation produced by PAVE-certified software or standardized documentation under 708.1.0 must be submitted with each cosacked mailing job that describes for each sack sortation level the number of pieces qualifying for each applicable automation price and the number of pieces qualifying for each applicable Presorted price.

i. Barcoded sack labels under 708.6.0 must be used to label the sacks.

9.3.2 Bundle Preparation

Except for mail prepared under the cobundling option in 9.3.3, the automation price mailing must be bundled and labeled under 245.7.0 and the Presorted price mailing must be bundled and labeled under 245.5.0. Loose packing under 245.5.0 is not permitted.

9.3.3 Optional Cobundling Preparation

As an option to the basic bundling requirements in 9.3.2, a mailer may choose to cobundle automation price and Presorted price flat-size pieces, subject to the conditions in 11.0.

9.3.4 Sacking Under 125-Piece or 15-Pound Rules

When the minimum quantity of 125 pieces or 15 pounds of mail is specified for a sack sortation level in 9.3.5, the provisions of 245.7.4 apply.

9.3.5 Sack Preparation and Labeling

Presorted price and automation price bundles prepared under 9.3.2 and 9.3.3 must be presorted together into sacks (cosacked) in the sequence listed below. Sacks must be labeled using the following information for Lines 1 and 2, and 245.4.0 for other sack label criteria.

a. 5-digit/scheme, required; scheme sort required, only for pieces meeting the automation-compatibility criteria in 301.3.0; 125-piece/15-pound minimum; labeling:

   1. Line 1: For 5-digit scheme sacks, use L007, Column B. For 5-digit sacks, use city, state, and 5-digit ZIP Code destination on pieces.

   2. Line 2: For 5-digit scheme sacks, “STD FLT 5D SCH BC/NBC”; for 5-digit sacks, “STD FLT 5D BC/NBC.”

b. *3-digit,* required, 125-piece/15-pound minimum; labeling:

1. Line 1: use L002, Column A.
2. Line 2: "STD FLTS 3D BC/NBC."

c. *Origin/entry 3-digit,* required for each 3-digit ZIP Code served by the SCF of the origin (verification) office, optional for each 3-digit ZIP Code served by the SCF of an entry office other than the origin office, no minimum; labeling:

1. Line 1: use L002, Column A.
2. Line 2: "STD FLTS 3D BC/NBC."

d. *ADC,* required, 125-piece/15-pound minimum; use L004 to determine ZIP Codes served by each ADC; labeling:

1. Line 1: use L004, Column B.
2. Line 2: "STD FLTS ADC BC/NBC."

e. *Mixed ADC,* required, no minimum; labeling:

1. Line 1: use L009, Column B.
2. Line 2: "STD FLTS BC/NBC WKG."

9.3.6 Tray Preparation and Labeling

Presorted price and automation price bundles meeting the standards in 245.3.0 for letter trays and prepared under 9.3.2 must be presorted together into trays (cotrayed) in the sequence in 9.3.5. Trays must be labeled using the information for Lines 1 and 2 and 245.4.0 for other tray label criteria. Cobundling under this option is not permitted.

9.4 Bound Printed Matter

9.4.1 Basic Standards

Bundles of flat-size pieces in a Presorted price mailing qualifying for and claiming the barcode discount under 263.2.0, 263.3.0, and 263.5.0 must be cosacked with bundles of flat-size pieces from a Presorted price mailing (not claiming the barcode discount) under the following conditions:

a. The Presorted price pieces qualifying for and claiming the barcode discount and the Presorted price pieces must be part of the same mailing job and be reported on the same postage statement.

b. The Presorted price pieces qualifying for and claiming the barcode discount must meet the criteria for flat-size mail under 201.3.0. Pieces in the Presorted price mailing must meet the criteria for flat-size mail under 201.2.0.

c. The Presorted price mailing qualifying for and claiming the barcode discount must meet the eligibility criteria in 263.2.0, 263.3.0, and 263.5.0, the mail preparation standards in 265.7.0, the sacking requirements in 9.4.4, and the documentation criteria in 9.4.1h.

d. The Presorted price mailing must meet the eligibility criteria in 263.2.0, 263.3.0, and 263.5.0, the mail preparation standards in 265.5.0, the sacking requirements in 9.4.4, and the documentation criteria in 9.4.1h.

e. The prices for pieces in the Presorted price mailing qualifying for and claiming the barcode discount are applied based on meeting the sortation requirements in 265.7.0, and when applicable, the zone. The prices for pieces in the Presorted price mailing are based on meeting the sortation requirements in 265.5.0, and when applicable, the zone.

f. The pieces must be marked according to 202.

g. The bundles prepared from the Presorted price mailing qualifying for the barcode discount and the bundles prepared from the Presorted price mailing must be sorted into the same sacks as described in 9.4.4.

h. A complete, signed postage statement(s), using the correct USPS form or an approved facsimile, must accompany each mailing job prepared under these procedures. In addition to the applicable postage statement, standardized documentation under 708.1.0 must be submitted with each cosacked mailing job that describes for each sack sortation level the number of pieces qualifying for the barcode discount and the number of pieces qualifying for each applicable Presorted price.

i. Barcoded sack labels under 708.6.0 must be used to label the sacks.

9.4.2 Bundle Preparation

Except for mail prepared under the cobundling option in 9.4.3, the Presorted price mailing qualifying for and claiming the barcode discount must be bundled and labeled under 265.7.0, and the Presorted price mailing must be bundled and labeled under 265.5.0.

9.4.3 Optional Cobundling Preparation

As an alternative to the basic bundling requirements in 9.4.2, flat-size Presorted price pieces qualifying for and claiming the barcode discount may be cobundled with flat-size Presorted price pieces, subject to 11.0.

9.4.4 Sack Preparation and Labeling

Bundles of Presorted price pieces qualifying for and claiming the barcode discount and Presorted price pieces prepared under 9.4.2 or 9.4.3 must be presorted together into sacks (cosacked) using the following preparation sequence, sack size, and labeling:

a. *5-digit/scheme*, required; scheme sort required, only for pieces meeting the automation-compatibility criteria in 201.3.0; minimum 20 addressed pieces; labeling:

   1. Line 1: For 5-digit scheme sacks, use L007, Column B. For 5-digit sacks, use city, state, and 5-digit ZIP Code destination on pieces.

   2. Line 2: For 5-digit scheme sacks, “PSVC FLT 5D SCH BC/NBC”; for 5-digit sacks, “PSVC FLT 5D BC/NBC.”

b. *3-digit,* required, except for optional bundles with 3-digit ZIP Code prefixes indicated by an “N” in L002, when optional SCF sacks are prepared; minimum 20 addressed pieces; labeling:

   1. Line 1: L002, Column A.

   2. Line 2: “PSVC FLTS 3D BC/NBC.”

c. *SCF,* optional, minimum 20 addressed pieces; labeling:

1. Line 1: L005, Column B.
2. Line 2: “PSVC FLTS SCF BC/NBC.”

d. *ADC,* required, minimum 20 addressed pieces (use L004 to determine ZIP Codes served by each ADC); labeling:

1. Line 1: L004, Column B.
2. Line 2: “PSVC FLTS ADC BC/NBC.”

e. *Mixed ADC,* required, no minimum; labeling:

1. Line 1: use L009, Column B.
2. Line 2: “PSVC FLTS BC/NBC WKG.”

10.0 Merging Bundles of Flats Using the City State Product

10.1 Periodicals

10.1.1 Basic Standards

Throughout 10.1, trays may be used in lieu of sacks, even when the language specifies just "sacks." Carrier route bundles in a carrier route mailing may be placed in the same sack or on the same pallet as 5-digit bundles from machinable (barcoded or nonbarcoded) price mailings (including pieces cobundled under 11.0) under the following conditions:

a. A carrier route mailing must be part of the mailing job, unless cobundled under 11.0 using 5-digit scheme (L007) or 3-digit scheme (L008) bundle preparation, and sacked under 10.1.4.

b. The pieces in the carrier route mailing, the machinable barcoded price mailing, and the machinable nonbarcoded price mailing must be part of the same mailing job.

c. Pieces in the machinable price mailing must meet the flats criteria in 201.3.0; pieces that meet the flats criteria in 207.26.0 also may be sacked under this option. Pieces in the machinable nonbarcoded price mailing and the carrier route mailing must be flat-size.

d. Mailers must use the Carrier Route Indicators field in the City State Product (see 509.1.2) to prepare the mailing and enter the mailing no later than 90 days after the release date of the City State Product used.

e. Carrier route bundles may be cosacked or copalletized with machinable barcoded price 5-digit bundles, machinable nonbarcoded price 5-digit bundles, and cobundled 5-digit bundles only for those 5-digit ZIP Codes that have an “A” or “C” indicator in the Carrier Route Indicators field in the City State Product indicating eligibility for such cosacking or copalletization. Containers of mail sorted in this manner are called “merged 5-digit” sacks or pallets. Containers of mail sorted in this manner for which scheme (L001) sortation is also performed are called “merged 5-digit scheme” sacks or pallets. Pieces in 5-digit scheme (L007) bundles may not be placed in merged 5-digit containers.

f. If sortation under this section is performed, merged 5-digit sacks or pallets must be prepared for all 5-digit ZIP Codes with an "A" or "C" indicator in the City State Product that permits such preparation when there is enough volume for the 5-digit ZIP Code to prepare such a sack under 10.1.4 or such a pallet under 10.1.5. In addition, all possible merged 5-digit scheme sacks must be prepared under 10.1.4, or all possible merged 5-digit scheme and 5-digit scheme pallets must be prepared under 10.1.5.

g. For mailings prepared in sacks, mailers may not combine firm bundles and 5-digit scheme pieces in 5-digit scheme bundles or in 5-digit scheme sacks. Firm bundles must be placed in a separate individual 5-digit sack under 10.1.4g to maintain 5-digit price eligibility. Mailers may combine firm bundles with 5-digit scheme, 3-digit scheme, and other presort destination bundles in carrier route, 5-digit, 3-digit, SCF, ADC, and mixed ADC sacks. Only an In-County firm bundle can contribute toward the six-piece minimum for price eligibility.

h. The bundles from each separated mailing must be sorted together into sacks (cosacked) under 10.1.4 or on pallets (copalletized) under 10.1.5 using presort software that is PAVE-certified.

i. A complete, signed postage statement(s), using the correct USPS form or an approved facsimile, must accompany each mailing job prepared under these procedures. In addition to the postage statement(s), documentation prepared by PAVE-certified software must be submitted with each cosacked or copalletized mailing job that describes for each sack sortation level and sack, or each pallet sortation level and pallet, the number of pieces qualifying for each applicable price.

j. Barcoded sack labels under 708.6.0 must be used to label sacks.

10.1.2 Bundle Preparation

Bundles must be prepared as follows:

a. *Sacked mailings.* The carrier route mailing must be bundled and labeled under 207.23.0. Except when prepared under the cobundling option in 11.0, the barcoded price mailing must be bundled and labeled under 207.25.0 and the nonbarcoded price mailing must be bundled and labeled under 207.22.0.

b. *Palletized mailings.* Bundles placed on pallets must be prepared under the standards in 8.9.

10.1.3 Bundles With Fewer Than Six Pieces

Carrier route, 5-digit scheme, 5-digit, 3-digit scheme, and 3-digit bundles may contain fewer than six pieces when the publisher determines that such preparation improves service. Pieces in these low-volume bundles must be claimed at the applicable mixed ADC price (Outside-County) or basic price (In-County). Low-volume bundles are permitted only when they are sacked or prepared on pallets as follows:

a. Place low-volume carrier route, 5-digit, 3-digit scheme, and 3-digit bundles in only the following containers:

1. Carrier route, merged 5-digit scheme, 5-digit scheme carrier routes, merged 5-digit, 5-digit carrier routes, 5-digit, 3-digit, and SCF sacks that contain at least 24 pieces.
2. Merged 3-digit sacks that contain at least one six-piece carrier route bundle.
3. Origin/entry SCF sacks.
4. On merged 5-digit scheme, 5-digit scheme carrier routes, 5-digit scheme, merged 5-digit, 5-digit carrier routes, 5-digit, 3-digit, or SCF pallets, as appropriate.

b. Place low-volume 5-digit scheme bundles in only 5-digit scheme, 3-digit, and SCF sacks that contain at least 24 pieces, or in origin/entry SCF sacks, or on 3-digit or SCF pallets, as appropriate.

10.1.4 Sack Preparation and Labeling

[4-7-14] All carrier route bundles must be placed in sacks under 10.1.4a through 10.1.4e and 10.1.4h as described below. When sorting is performed under this section, mailers must prepare merged 5-digit scheme sacks, 5-digit scheme carrier routes sacks, and merged 5-digit sacks for all possible 5-digit schemes or 5-digit ZIP Codes as applicable, using L001 (merged 5-digit scheme and 5-digit scheme carrier routes sort only) and the Carrier Route Indicators field in the City State Product when there is enough volume for the 5-digit scheme or 5-digit ZIP Code to prepare such sacks under 10.1.4. Mailers must label sacks according to the Line 1 and Line 2 information listed below and under 207.20.1. If, due to the physical size of the mailpieces, the barcoded pieces are considered flat-size under 207.26.0, and the carrier route pieces and nonbarcoded pieces are considered irregular parcels under 201.1.0, “FLTS” must be shown as the processing category on the sack label. If a mailing job does not contain barcoded price pieces and the carrier route pieces and the nonbarcoded pieces are irregular parcel shaped, use “IRREG” for the processing category on the contents line of the label. Mailers must prepare sacks containing carrier route and 5-digit bundles from the carrier route, barcoded, and nonbarcoded mailings in the mailing job in the following manner and sequence:

a. *Carrier route,* required, may contain only carrier route bundles. Must be prepared when there are 72 or more pieces for the same carrier route. Optional at 24 pieces minimum. Labeling:

1. Line 1: use city, state, and 5-digit ZIP Code destination (see 207. for military mail).
2. Line 2: “PER” or “NEWS” as applicable; followed by “FLTS” or “IRREG” as applicable; followed by “CR” for basic price, “WSH” for high-density price, or “WSS” for saturation price; followed by the route type and number.

b. *Merged 5-digit scheme*, required at 72 pieces, optional at 24 pieces minimum. Must contain at least one 5-digit ZIP Code in the scheme with an “A” or “C” indicator in the City State Product. May contain carrier route bundles for any 5-digit ZIP Code(s) in a single scheme listed in L001 as well as machinable barcoded price 5-digit bundles and machinable nonbarcoded price 5-digit bundles for those 5-digit ZIP Codes in the schemes that have an “A” or “C” indicator in the City State Product. For 5-digit ZIP Code(s) in a scheme that has

a “B” or “D” indicator in the City State Product, prepare sack(s) under 10.1.4g and 10.1.4h. For 5-digit ZIP Codes not included in a scheme, prepare sacks under 10.1.4d through 10.1.4h. Labeling:

1. Line 1: use L001, Column B.
2. Line 2: “PER” or “NEWS” as applicable, followed by “FLTS” or “IRREG” as applicable, followed by “CR/5D SCH.”

c. *5-digit scheme carrier routes,* required at 72 pieces, optional at 24 pieces minimum. May contain only carrier route bundles for 5-digit ZIP Code(s) in a single scheme listed in L001 when all the 5-digits in the scheme have a “B” or “D” indicator in the City State Product. Mailers must prepare this sack if there are any carrier route bundle(s) for such a scheme. Labeling:

1. Line 1: use L001, Column B.
2. Line 2: “PER” or “NEWS” as applicable, followed by “FLTS” or “IRREG” as applicable, followed by “CR-RTS SCH.”

d. *Merged 5-digit,* required at 72 pieces, optional at 24 pieces minimum. Must be prepared only for those 5-digit ZIP Codes that are not part of a scheme and that have an “A” or “C” indicator in the City State Product. May contain carrier route bundles, machinable barcoded price 5-digit bundles, and machinable nonbarcoded price 5-digit bundles. Labeling:

1. Line 1: use city, state, and 5-digit ZIP Code destination (see 207. for military mail).
2. Line 2: “PER” or “NEWS” as applicable, followed by “FLTS” or “IRREG” as applicable, followed by “CR/5D.”

e. *5-digit carrier routes,* required at 72 pieces, optional at 24 pieces minimum. Include only carrier route bundles for a 5-digit ZIP Code remaining after preparing sacks under 10.1.4a through 10.1.4d. May contain only carrier route bundles for any 5-digit ZIP Code that is not part of a scheme listed in L001 and that has a “B” or “D” indicator in the City State Product. Labeling:

1. Line 1: use city, state, and 5-digit ZIP Code destination (see 207. for military mail).
2. Line 2: “PER” or “NEWS” as applicable, followed by “FLTS” or “IRREG” as applicable, followed by “CR-RTS.”

f. *5-digit scheme,* required at 72 pieces, optional at 24 pieces minimum. May contain only machinable barcoded price and cobundled machinable barcoded and nonbarcoded price 5-digit scheme bundles for the same 5-digit scheme destination. Labeling:

1. Line 1: L007, Column B.
2. Line 2: “PER” or “NEWS” as applicable, followed by “FLTS 5D SCH BC.”

g. *5-digit,* required at 72 pieces, optional at 24-piece minimum, except as provided in 10.1.1g for firm bundles. May contain only barcoded price 5-digit bundles and nonbarcoded price 5-digit bundles for the same 5-digit ZIP Code for any 5-digit ZIP Code that has a "B" or "D" indicator in the City State Product. Labeling:

   1. Line 1: use city, state, and 5-digit ZIP Code destination (see 207. for military mail).

   2. Line 2: "PER" or "NEWS" as applicable, followed by "FLTS 5D BC/NBC," except if there are no barcoded price bundles in the mailing job, label under 207.22.6.

h. *Merged 3-digit*. Required for carrier route, 5-digit, and 5-digit scheme bundles remaining after preparing sacks under 10.1.4a through 10.1.4g, and any 3-digit and 3-digit scheme bundles with a minimum of 24 pieces for a 3-digit area. As an option to preparing bundles in merged 3-digit sacks, mailers may place those bundles in flats trays (see 207.20.0). Labeling:

   1. Line 1: use L002, Column A.

   2. Line 2: "PER" or "NEWS" as applicable, followed by "FLTS" or "IRREG" as applicable, followed by "CR/5D/3D." If there are no barcoded price bundles in the mailing job, label under 207.22.6.

i. *SCF through mixed ADC.* Any 5-digit scheme and 5-digit bundles remaining after preparing sacks under 10.1.4a through 10.1.4h and all 3-digit, 3-digit scheme, ADC, origin mixed ADC, and mixed ADC bundles must be sacked and labeled under 9.2 for cosacking of barcoded price and nonbarcoded price bundles, except if there are no barcoded price bundles in the mailing job, sack and label under 207.22.6, or if there are no nonbarcoded price bundles in the mailing job, sack and label under 207.25.4.

10.1.5 Pallet Preparation and Labeling

Mailers must prepare pallets of bundles in the manner and sequence listed below and under 8.0. When sortation under this option is performed, mailers must prepare all merged 5-digit scheme, 5-digit scheme carrier routes, 5-digit scheme, and merged 5-digit pallets that are possible in the mailing based on the volume of mail to the destination using L001 and/or the City State Product. Mailers must label pallets according to the Line 1 and Line 2 information listed below and under 8.6.

a. *Merged 5-digit scheme,* required and permitted only when there is at least one 5-digit ZIP Code in the scheme that has an "A" or "C" indicator in the City State Product. May contain carrier route bundles for any 5-digit ZIP Code(s) in a single scheme listed in L001 as well as machinable barcoded price 5-digit bundles and machinable nonbarcoded price 5-digit bundles for those 5-digit ZIP Codes in the scheme that have an "A" or "C" indicator in the City State Product. For schemes in which all of the 5-digit ZIP Codes have a "B" or "D" indicator in the City State Product, begin preparing pallets under 10.1.5c (5-digit scheme carrier routes pallet). For 5-digit ZIP Codes not included in a scheme, begin preparing pallets under 10.1.5c (merged 5-digit pallet). Labeling:

   1. Line 1: use L001, Column B.

2. Line 2: “PER” or “NEWS” as applicable; followed by “FLTS”; followed by “CR/5D SCHEME.”

b. *5-digit scheme carrier routes,* required. May contain only carrier route bundles for carrier routes in an L001 scheme for which all of the 5-digit ZIP Codes in the scheme have a “B” or “D” indicator in the City State Product. Labeling:

1. Line 1: use L001, Column B.
2. Line 2: “PER” or “NEWS” as applicable; followed by “FLTS”; followed by “CR-RTS SCHEME.”

c. *Merged 5-digit,* required. May contain carrier route bundles, machinable barcoded price 5-digit bundles, and machinable nonbarcoded price 5-digit for those 5-digit ZIP Codes that are not part of a scheme and that have an “A” or “C” indicator in the City State Product. Labeling:

1. Line 1: use city, state, and 5-digit ZIP Code destination (see 8.6.4 for military mail).
2. Line 2: “PER” or “NEWS” as applicable; followed by “FLTS”; followed by “CR/5D.”

d. *5-digit carrier routes,* required. May contain only carrier route price bundles for the same 5-digit ZIP Code for those 5-digit ZIP Codes that are not part of a scheme and that have a “B” or “D” indicator in the City State Product. Labeling:

1. Line 1: use city, state, and 5-digit ZIP Code destination (see 8.6.4 for military mail).
2. Line 2: “PER” or “NEWS” as applicable; followed by “FLTS”; followed by “CARRIER ROUTES” or “CR-RTS.”

e. *5-digit,* required. May contain only machinable barcoded price 5-digit bundles and machinable nonbarcoded price 5-digit bundles for the same 5-digit ZIP Code with a “B” or “D” indicator in the City State Product, or 5-digit scheme (L007) bundles. Five-digit scheme bundles are assigned to 5-digit pallets according to the “label to” 5-digit ZIP Code in L007. Labeling:

1. Line 1: use city, state, and 5-digit ZIP Code destination (see 8.6.4 for military mail).
2. Line 2: “PER” or “NEWS” as applicable; followed by “FLTS”; followed by “5D”; followed by “BARCODED” or “BC” if the pallet contains machinable barcoded mail; followed by “NONBARCODED” or “NBC” if the pallet contains machinable nonbarcoded mail.

f. *3-digit,* optional. Option not available for 3-digit ZIP Code prefixes marked “N” in L002. May contain carrier route price, machinable barcoded price, and machinable nonbarcoded price mail, including 3-digit scheme (L008) bundles. Three-digit scheme bundles are assigned to 3-digit pallets according to the “label to” 3-digit ZIP Code in L008. Labeling:

1. Line 1: use L002, Column A.

2. Line 2: “PER” or “NEWS” as applicable; followed by “FLTS”; followed by “3D,” followed by “BARCODED” or “BC” if the pallet contains machinable barcoded price mail; followed by “NONBARCODED” or “NBC” if the pallet contains machinable nonbarcoded price mail and/or carrier route mail.

g. *SCF through mixed ADC*, use 8.10.2h through 8.10.2k, as applicable, to prepare and label SCF, ADC, Origin Mixed ADC (OMX) and mixed ADC pallet levels.

10.2 Standard Mail

10.2.1 Basic Standards

Carrier route bundles from a carrier route price mailing may be placed in the same sack or on the same pallet as 5-digit bundles from an automation price mailing and 5-digit bundles from a Presorted price mailing (including pieces cobundled under 11.0) under the following conditions:

a. A carrier route mailing must be part of the mailing job, unless cobundled under 11.0 utilizing 5-digit scheme (L007) or 3-digit scheme (L008) bundle preparation and sacked under 10.1.4.

b. The pieces in the carrier route price mailing, the automation price mailing, and the Presorted price mailing must be part of the same mailing job, and all three mailings must be reported on the same postage statement.

c. Pieces in the automation price mailing must meet the criteria for a flat under 301.3.0. Pieces in the Presorted price mailing and the carrier route mailing must meet the criteria for a flat under 301.1.0.

d. Mailers must use the Carrier Route Indicators field in the City State Product to prepare the mailing and enter the mailing no later than 90 days after the release date of the City State Product used.

e. Carrier route bundles may be cosacked or copalletized with automation price 5-digit bundles, Presorted price 5-digit bundles, and cobundled 5-digit bundles only for those 5-digit ZIP Codes that have an “A” or “C” indicator in the Carrier Route Indicators field in the City State Product indicating eligibility for such cosacking or copalletization. Containers of mail sorted in this manner are called “merged 5-digit” sacks or pallets. Containers of mail sorted in this manner for which scheme (L001) sortation is also performed are called “merged 5-digit scheme” sacks or pallets. Pieces in 5-digit scheme (L007) bundles may not be placed in merged 5-digit containers.

f. If sortation under this section is performed, merged 5-digit sacks or pallets must be prepared for all 5-digit ZIP Codes with an “A” or “C” indicator in the City State Product that permits such preparation when there is enough volume for the 5-digit ZIP Code to prepare that sack or pallet.

g. For sacked mailings, the prices for pieces in the carrier route mailing are based on the criteria in 243.6.0, the prices for pieces in the automation price mailing are applied based on the number of pieces in the bundle and the level of bundle to which they are sorted under 243.7.0, and the prices for pieces in the Presorted price mailing are based on the number of pieces in the bundle and the level of sack to which they are sorted under 243.5.0.

h. The pieces in each separate mailing must bear the applicable markings required under 245.5.0, 245.6.0, or 245.7.0 and under 202.

i. For palletized mailings, the prices are based on the level of bundle that the pieces are contained in under 243.6.0 and 243.7.0.

j. The bundles from each separate mailing must be sorted together into sacks (cosacked) under 10.2.3 and 10.2.4 or on pallets (copalletized) under 10.2.5 using presort software that is PAVE-certified.

k. A complete, signed postage statement, using the correct USPS form or an approved facsimile, must accompany each mailing job prepared under these procedures.

l. In addition to the applicable postage statement, documentation produced by PAVE-certified software must be submitted with each cosacked or copalletized mailing job that describes for each sack sortation level and sack, or each pallet sortation level and pallet, the number of pieces qualifying for each applicable carrier route price, each applicable automation price, and each applicable Presorted price.

m. Barcoded sack labels under 708.6.0 must be used to label sacks.

10.2.2 Bundle Preparation

Bundles must be prepared as follows:

a. *Sacked mailings.* The carrier route mailing must be bundled and labeled under 245.6.0. Except when prepared under the cobundling option in 11.0, the automation price mailing must be bundled and labeled under 245.7.0 and the Presorted price mailing must be bundled and labeled under 245.5.0.

b. *Palletized mailings.* Bundles placed on pallets must be prepared under the standards in 8.0.

10.2.3 Sacking Under 125-Piece or 15-Pound Rules

When the minimum quantity of 125 pieces or 15 pounds of mail is specified for a sack sortation level in 10.2.4, the provisions of 245.7.4 apply.

10.2.4 Sack Preparation and Labeling

Mailers must prepare sacks in the following manner and sequence. All carrier route bundles must be placed in sacks under 10.2.4a through 10.2.4e as described below. Mailers must prepare all merged 5-digit scheme sacks, 5-digit scheme carrier routes sacks, and merged 5-digit sacks that are possible in the mailing based on the volume of mail to the destination using L001 and the Carrier Route Indicators field in the City State Product. Mailers must label sacks according to the Line 1 and Line 2 information listed below and under 245.4.0.

a. *Carrier route,* required, may contain only carrier route bundles. Must be prepared when there are 125 pieces or 15 pounds of pieces for the same carrier route. Smaller volume not permitted. Labeling:

   1. Line 1: use city, state, and 5-digit ZIP Code destination (see 245.4.2 245.4.0 for military mail).

2. Line 2: “STD FLTS”; followed by “ECRLOT,” “ECRWSH,” or “ECRWSS” as applicable for basic, high-density, and saturation price mail; followed by the route type and number.

b. *Merged 5-digit scheme,* required and permitted only when there is at least one 5-digit ZIP Code in the scheme with an “A” or “C” indicator in the City State Product. May contain carrier route bundles for any 5-digit ZIP Code(s) in a single scheme listed in L001 as well as automation price 5-digit bundles and Presorted price 5-digit bundles for those 5-digit ZIP Codes in the scheme with an “A” or “C” indicator in the City State Product. When preparation of this sack level is permitted, a sack must be prepared if there are any carrier route bundle(s) for the scheme. If there is not at least one carrier route bundle for any 5-digit destination in the scheme, preparation of this sack is required when there are at least 125 pieces or 15 pounds of pieces in 5-digit bundles for any of the 5-digit ZIP Codes in the scheme that have an “A” or “C” indicator in the City State Product (smaller volume not permitted). For a 5-digit ZIP Code(s) in a scheme with a “B” or “D” indicator in the City State Product, prepare sack(s) for the automation price and Presorted price bundles under 10.2.4g and 10.2.4h. For 5-digit ZIP Codes not included in a scheme, prepare sacks under 10.2.4d through 10.2.4h. Labeling:

1. Line 1: use L001, Column B.
2. Line 2: “STD FLTS CR/5D SCH.”

c. *5-digit scheme carrier routes,* required, may contain only carrier route bundles for 5-digit ZIP Code(s) in a single scheme listed in L001 when all the 5-digit ZIP Codes in the scheme have a “B” or “D” indicator in the City State Product. Must be prepared if there are any carrier route bundle(s) for such a scheme. Labeling:

1. Line 1: use L001, Column B.
2. Line 2: “STD FLTS CR-RTS SCH.”

d. *Merged 5-digit,* required. Must be prepared only for those 5-digit ZIP Codes that are not part of a scheme and that have an “A” or “C” indicator in the City State Product. May contain carrier route bundles, automation price 5-digit bundles, and Presorted price 5-digit bundles. Must be prepared if there are any carrier route bundles for the 5-digit destination. If there is not at least one carrier route bundle for the 5-digit destination, must be prepared when there are at least 125 pieces or 15 pounds of pieces in 5-digit bundles for the same 5-digit destination (smaller volume not permitted). Labeling:

1. Line 1: use city, state, and 5-digit ZIP Code destination (see 245.4.2 245.4.0 for military mail).
2. Line 2: “STD FLTS CR/5D.”

e. *5-digit carrier routes,* required. Sack only carrier route bundles for a 5-digit ZIP Code remaining after preparing sacks under 10.2.4a through 10.2.4d to this level. May contain only carrier route bundles for any 5-digit ZIP Code that is not part of a scheme listed in L001 and that has a “B” or “D” indicator in the City State Product. No sack minimum. Labeling:

1. Line 1: use city, state, and 5-digit ZIP Code destination (see 245.4.2 245.4.0 for military mail).
2. Line 2: "STD FLTS CR-RTS."

f. *5-digit scheme,* required. May contain automation price, Presorted price, and cobundled automation and Presorted price 5-digit scheme bundles for the same 5-digit scheme destination. Must be prepared when there are at least 125 pieces or 15 pounds of pieces for the 5-digit scheme destination. Smaller volume not permitted. Labeling:

1. Line 1: L007, Column B.
2. Line 2: "STD FLTS 5D SCH BC/NBC."

g. *5-digit,* required, may contain only automation price 5-digit bundles and Presorted price 5-digit bundles for a 5-digit ZIP Code that has a "B" or "D" indicator in the City State Product. Must be prepared when there are at least 125 pieces or 15 pounds of pieces for the 5-digit ZIP Code. Smaller volume not permitted. Labeling:

1. Line 1: use city, state, and 5-digit ZIP Code destination (see 245.4.2 245.4.0 for military mail).
2. Line 2: "STD FLTS 5D BC/NBC," except if there are no automation price bundles in the mailing job, use "STD FLTS 5D NON BC."

h. *3-digit through mixed ADC sacks.* Any 5-digit scheme and 5-digit bundles remaining after preparing sacks under 10.2.4a through 10.2.4g, and all 3-digit, ADC, and Mixed ADC bundles, must be sacked and labeled according to the applicable requirements under 9.3 for cosacking of automation price and Presorted price bundles, except if there are no automation price bundles in the mailing job, sack and label under 245.5.0, or, if there are no Presorted price bundles in the mailing job, sack and label under 245.7.4.

10.2.5 Pallet Preparation and Labeling

Mailers must prepare pallets in the manner and sequence listed below and under 8.0. Mailers must prepare all merged 5-digit scheme, 5-digit scheme carrier routes, 5-digit scheme, and merged 5-digit pallets that are possible in the mailing based on the volume of mail to the destination using L001 and/or the City State Product. Mailers must label pallets according to the Line 1 and Line 2 information listed below and under 8.6.

a. *Merged 5-digit scheme,* required and permitted only when there is at least one 5-digit ZIP Code in the scheme that has an "A" or "C" indicator in the City State Product. May contain carrier route bundles for any 5-digit ZIP Code(s) in a single scheme listed in L001 as well as automation price 5-digit bundles and Presorted price 5-digit bundles for those 5-digit ZIP Codes in the scheme that have an "A" or "C" indicator in the City State Product. For schemes in which all of the 5-digit ZIP Codes have a "B" or "D" indicator in the City State Product, begin preparing pallets under 10.2.5b (5-digit scheme carrier routes pallet). For 5-digit ZIP Codes not included in a scheme, begin preparing pallets under 10.2.5c (merged 5-digit pallet). Labeling:

1. Line 1: use L001, Column B.

2. Line 2: “STD FLTS CR/5D SCHEME.”

b. *5-digit scheme carrier routes,* required, may contain only carrier route bundles for carrier routes in an L001 scheme for which all of the 5-digit ZIP Codes in the scheme have a “B” or “D” indicator in the City State Product. Labeling:

1. Line 1: use L001, Column B.
2. Line 2: “STD FLTS CR-RTS SCHEME.”

c. *Merged 5-digit,* required, may contain carrier route price bundles, automation price 5-digit bundles, and Presorted price 5-digit bundles for those 5-digit ZIP Codes that are not part of a scheme and that have an “A” or “C” indicator in the City State Product. Labeling:

1. Line 1: use city, state, and 5-digit ZIP Code destination (see 8.6.4 for military mail).
2. Line 2: “STD FLTS CR/5D.”

d. *5-digit carrier routes,* required, may contain only carrier route price bundles for the same 5-digit ZIP Code for those 5-digit ZIP Codes that are not part of a scheme and that have a “B” or “D” indicator in the City State Product. Labeling:

1. Line 1: use city, state, and 5-digit ZIP Code destination (see 8.6.4 for military mail).
2. Line 2: “STD FLTS,” followed by “CARRIER ROUTES” or “CR-RTS.”

e. *5-digit,* required, may contain only automation price 5-digit bundles and Presorted price 5-digit bundles for the same 5-digit ZIP Code with a “B” or “D” indicator in the City State Product, or 5-digit scheme (L007) bundles (automation price and cobundled automation and Presorted price pieces only). Five-digit scheme bundles are assigned to 5-digit pallets according to the “label to” 5-digit ZIP Code in L007. Labeling:

1. Line 1: use city, state, and 5-digit ZIP Code destination (see 8.6.4 for military mail).
2. Line 2: “STD FLTS 5D”; followed by “BARCODED” or “BC” if the pallet contains automation price mail; followed by “NONBARCODED” or “NBC” if the pallet contains Presorted price mail.

f. *3-digit,* optional, option not available for 3-digit ZIP Code prefixes marked “N” in L002. May contain carrier route price, automation price, and Presorted price mail, including 3-digit scheme (L008) bundles (automation and cobundled automation and Presorted price pieces only). Three-digit scheme bundles are assigned to 3-digit pallets according to the “label to” 3-digit ZIP Code in L008. Labeling:

1. Line 1: use L002, Column A.
2. Line 2: “STD FLTS 3D”; followed by “BARCODED” or “BC” if the pallet contains automation price mail; followed by “NONBARCODED” or “NBC” if the pallet contains Presorted price mail and/or carrier route price mail.

g. *SCF,* required, may contain carrier route price, automation price, and Presorted price bundles. Labeling:

1. Line 1: use L002, Column C.
2. Line 2: “STD FLTS SCF”; followed by “BARCODED” or “BC” if the pallet contains automation price mail; followed by “NONBARCODED” or “NBC” if the pallet contains Presorted price mail and/or carrier route price mail.

h. *ASF,* required, except that an ASF sort may not be required if using bundle reallocation under 8.13.3. May contain carrier route price, automation price, and/or Presorted price bundles. Sort ADC bundles to ASF pallets based on the “label to” ZIP Code for the ADC destination of the bundle in L004. At the mailer’s option, sort appropriate mixed ADC bundles to ASF pallets based on the “label to” ZIP Code for the ADC destination of the bundle in L010. All optional mixed ADC bundles on ASF pallets must contain only pieces destinating within the ASF as shown in 6.3. See 246.3.0 for additional requirements for DNDC price eligibility. Labeling:

1. Line 1: use L602, Column B.
2. Line 2: “STD FLTS ASF”; followed by “BARCODED” or “BC” if the pallet contains automation price mail; followed by “NONBARCODED” or “NBC” if the pallet contains Presorted price mail and/or carrier route price mail.

i. *NDC,* required, may contain carrier route price, automation price, and/or Presorted price bundles. Sort ADC bundles to NDC pallets based on the “label to” ZIP Code for the ADC destination of the bundle in L004. At the mailer’s option, sort appropriate mixed ADC bundles to NDC pallets based on the “label to” ZIP Code for the ADC destination of the bundle in L010. All optional mixed ADC bundles on NDC pallets must contain only pieces destinating within the NDC as shown in 6.3. See 246.3.0 for additional requirements for DNDC price eligibility. Labeling:

1. Line 1: use L601, Column B.
2. Line 2: “STD FLTS NDC”; followed by “BARCODED” or “BC” if the pallet contains automation price mail; followed by “NONBARCODED” or “NBC” if the pallet contains Presorted price mail and/or carrier route price mail.

11.0 Combining Automation Price and Nonautomation Price Flats in Bundles

11.1 First-Class Mail

11.1.1 Basic Standards

Mailers may choose to cobundle (see 235.1.4m) automation price and nonautomation price pieces as an option to the basic bundling requirements in 9.0, subject to the following conditions:

a. The pieces in the automation price mailing and the nonautomation price mailing must be part of the same mailing job and must be reported on the appropriate postage statement.

b. The pieces in the mailing job must be flat-size and meet any other size and mailpiece design requirements applicable to the price category for which they are prepared.

c. The basic standards in 9.0 must be met.

d. A minimum of 500 automation price pieces and 500 nonautomation price pieces are required. The total number of automation price and nonautomation price pieces must be used to meet the minimum volume requirements for bundles and containers to a presort destination.

e. Nonautomation price pieces must contain a 5-digit barcode and be cobundled with automation price pieces for the same presort destination. If this optional preparation method is used, all automation price and nonautomation price pieces in the same mailing job and reported on the same postage statement must be cobundled.

f. Mailers must sort automation price pieces and nonautomation price pieces for each presort destination so that only one physical bundle for each logical presort destination (see 235.1.4l) includes both automation price pieces (containing a ZIP+4 or delivery point barcode) and nonautomation price pieces (containing a 5-digit barcode).

11.1.2 Bundle Preparation

Preparation sequence, bundle size, and labeling:

a. *5-digit,* required, 10-piece minimum; red Label 5 or optional endorsement line (OEL).

b. *3-digit,* required, 10-piece minimum; green Label 3 or OEL.

c. *ADC,* required, 10-piece minimum; pink Label A or OEL.

d. *Mixed ADC,* required, no minimum; tan Label X or OEL.

11.2 Periodicals

11.2.1 Basic Standards

Mailers may choose to cobundle (see 207.18.4z) barcoded price and nonbarcoded price flat-size pieces as an option to the basic bundling requirements in 207.22.0 and 207.25.0. 5-digit scheme and 3-digit scheme bundles also must meet the additional standards in 207.18.4i and 207.18.4q. Mailing jobs (for flats meeting the criteria in 201.3.0) prepared using the 5-digit scheme and/or the 3-digit scheme bundle preparation must be sacked under 9.0 or 10.0 or palletized under 10.0, 12.0, or 13.0. All bundles are subject to the following conditions:

a. The pieces in the barcoded price mailing and the nonbarcoded price mailing must be part of the same mailing job and must be reported on the appropriate postage statement.

b. Mailings prepared in sacks must meet the basic standards in 9.0 or 10.0.

c. Mailings prepared on pallets must meet the basic standards in 8.0, 10.0, 12.0, or 13.0.

d. The total number of barcoded price and nonbarcoded price pieces must be used to meet the minimum volume requirements for bundles and containers.

e. Nonbarcoded price pieces must contain a 5-digit barcode and be cobundled with barcoded price pieces for the same presort destination. All pieces in the mailing job are reported on the same postage statement and must be cobundled.

f. Within a bundle, all pieces must meet the machinable flats requirements in 201.3.0 or all pieces must meet the nonmachinable flats requirements in 207.26.0.

g. Mailers must sort pieces for each presort destination so that only one physical bundle for each logical presort destination (see 207.18.4y) includes both barcoded price pieces (containing a ZIP+4 or delivery point barcode) and nonbarcoded price pieces (containing a 5-digit barcode).

11.2.2 Bundle Preparation

Pieces meeting the criteria in 201.3.0 must be prepared in 5-digit scheme bundles for those 5-digit ZIP Codes identified in L007 and in 3-digit scheme bundles for those 3-digit ZIP Codes identified in L008. Preparation sequence, bundle size, and labeling:

a. *Firm,* two-piece minimum; blue Label F or optional endorsement line (OEL).

b. *5-digit scheme,* required for pieces prepared under 201.3.0, six-piece minimum, fewer pieces permitted under 11.2.3; red Label 5 SCH, or OEL.

c. *5-digit,* required, six-piece minimum, fewer pieces permitted under 11.2.3; red Label 5 or OEL.

d. *3-digit scheme,* required for pieces prepared under 201.3.0, six-piece minimum, fewer pieces permitted under 11.2.3; green Label 3 SCH or OEL.

e. *3-digit,* required, six-piece minimum, fewer pieces permitted under 11.2.3; green Label 3 or OEL.

f. *ADC,* required, six-piece minimum; pink Label A or OEL.

g. *Origin mixed ADC,* required, no minimum; for any remaining pieces for destinations in L201, Column B, corresponding to the origin ZIP Code in Column A; tan Label X or OEL.

h. *Mixed ADC,* required, no minimum; tan Label X or OEL.

11.2.3 Bundles With Fewer Than Six Pieces

5-digit scheme, 5-digit, 3-digit scheme, and 3-digit bundles may contain fewer than six pieces when the publisher determines that such preparation improves service. Pieces in these low-volume bundles must be claimed at the applicable mixed ADC price (Outside-County) or basic price (In-County). Low-volume bundles are permitted only when they are sacked or prepared on pallets as follows:

a. Place low-volume 5-digit and 3-digit bundles in only 5-digit scheme, 5-digit, 3-digit, and SCF sacks that contain at least 24 pieces; or in origin/entry SCF sacks; or on merged 5-digit scheme, 5-digit scheme, merged 5-digit, 5-digit, 3-digit, or SCF pallets, as appropriate.

b. Place low-volume 5-digit scheme and 3-digit scheme bundles in only 5-digit scheme, 3-digit, and SCF sacks that contain at least 24 pieces, or in origin/entry SCF sacks, or on 3-digit or SCF pallets, as appropriate.

11.3 Standard Mail

11.3.1 Basic Standards

Mailers may choose to cobundle (see 245.1.4t) automation price and nonautomation price flat-size pieces as an option to the basic bundling requirements in 245.5.0 and 245.7.0. All pieces in the same bundle must meet the standards in 201.3.0. 5-digit scheme and 3-digit scheme bundles must meet the additional standards in 245.1.4f and 245.1.4m. Mailing jobs prepared using the 5-digit scheme and/or 3-digit scheme bundle preparation (for flats meeting the criteria in 201.3.0) must be sacked under 10.0 or palletized under 10.0, 12.0, or 13.0. All bundles are subject to the following conditions:

a. The pieces in the automation price mailing and the nonautomation price mailing must be part of the same mailing job and must be reported on the appropriate postage statement.

b. Mailings prepared in sacks must meet the basic standards in 9.0 or 10.0.

c. Mailings prepared on pallets must meet the basic standards in 8.0, 10.0, 12.0, or 13.0.

d. A minimum of 200 pieces or 50 pounds of automation price pieces are required; the nonautomation price mailing may meet the residual volume requirements in 243.3.6. The total number of automation price and nonautomation price pieces must be used to meet the minimum volume requirements for bundles and containers.

e. Nonautomation price pieces must contain a 5-digit barcode and be cobundled with automation price pieces for the same presort destination. If this optional preparation method is used, all automation price and nonautomation price pieces in the same mailing job and reported on the same postage statement must be cobundled.

f. Mailers must sort nonautomation price pieces and automation price pieces for each presort destination so that only one physical bundle for each logical presort destination (see 245.1.4s) includes both nonautomation price pieces (containing a 5-digit barcode) and automation price pieces (containing a ZIP+4 or delivery point barcode).

11.3.2 Bundle Preparation

Pieces meeting the criteria in 201.3.0 must be prepared in 5-digit scheme bundles for those 5-digit ZIP Codes identified in L007 and in 3-digit scheme bundles for those 3-digit ZIP Codes identified in L008. Preparation sequence, bundle size, and labeling:

a. 5-digit scheme, required:

1. For mailings containing only pieces weighing 5 ounces (0.3125 pound) or less: 15-piece minimum; red Label 5 SCH or OEL.

2. For mailings containing any pieces weighing more than 5 ounces (0.3125 pound): 10-piece minimum; red Label 5 or OEL.

b. *5-digit,* required:

1. For mailings containing only pieces weighing 5 ounces (0.3125 pound) or less and measuring 3/4 inch thick or less: 15-piece minimum; red Label 5 or OEL.

2. For mailings containing any pieces weighing more than 5 ounces (0.3125 pound) or measuring more than 3/4 inch thick: 10-piece minimum; red Label 5 or OEL.

c. *3-digit scheme,* required, 10-piece minimum; green Label 3 SCH or OEL.

d. *3-digit,* required, 10-piece minimum; green Label 3 or OEL.

e. *ADC,* required, 10-piece minimum; pink Label A or OEL.

f. *Mixed ADC,* required, no minimum; tan Label X or OEL.

11.4 Bound Printed Matter

11.4.1 Basic Standards

Mailers may choose to cobundle (see 265.1.5k) nonautomation price flat-size with and without a barcode, as an option to the basic bundling requirements in 265.5.0 and 265.7.0, subject to the following conditions:

a. The pieces in the nonautomation price mailing qualifying for and claiming the barcode discount and the pieces in the nonautomation price mailing must be part of the same mailing job and reported on the same postage statement.

b. The mailing job must consist entirely of automation-compatible pieces meeting the criteria in 201.3.0, and may be prepared in 5-digit scheme bundles using L007 and 3-digit scheme bundles using L008.

c. Cobundled pieces must be cosacked under 9.0 or palletized under 8.0.

d. A separate minimum of 300 nonautomation price pieces qualifying for and claiming the barcode discount and a separate minimum of 300 nonautomation price pieces are required. The combined total number of pieces qualifying for and claiming the barcode discount and the nonautomation price must be used to meet the minimum volume requirements for bundles and sacks.

e. Nonautomation price pieces must contain a 5-digit barcode and be cobundled with nonautomation price pieces qualifying for and claiming the barcode discount for the same presort destination.

f. Unless presented using an approved manifest mailing system under 2.0, nonautomation price pieces qualifying for and claiming the barcode discount and nonautomation price pieces for each presort destination must be sorted so that only one physical bundle for each logical presort destination includes both nonautomation price pieces qualifying for the barcode discount (containing a ZIP+4 or delivery point barcode) and nonautomation price pieces (containing a 5-digit barcode).

11.4.2 Bundle Preparation

Preparation sequence, bundle size, and labeling:

a. *5-digit scheme,* optional, minimum 10 addressed pieces or 10 pounds, maximum bundle weight 20 pounds; red Label 5 SCH or OEL.

b. *5-digit,* required, minimum 10 addressed pieces or 10 pounds, maximum bundle weight 20 pounds; red Label 5 or optional endorsement line (OEL).

c. *3-digit scheme,* optional, minimum 10 addressed pieces or 10 pounds, maximum bundle weight 20 pounds; green Label 3 SCH or OEL.

d. *3-digit,* required, minimum 10 addressed pieces or 10 pounds, maximum bundle weight 20 pounds; green Label 3 or OEL.

e. *ADC,* required, minimum 10 addressed pieces or 10 pounds, maximum bundle weight 20 pounds; pink Label A or OEL.

f. *Mixed ADC,* required, no minimum, maximum bundle weight 20 pounds; tan Label X or OEL.

12.0 Merging Bundles of Flats on Pallets Using a 5% Threshold

12.1 Periodicals

12.1.1 Basic Standards

Five-digit scheme bundles (under L007) and 3-digit scheme bundles (under L008) must be prepared according to standards in 12.1.5. However, neither 5-digit scheme bundles nor 3-digit scheme bundles may be copalletized on any merged pallets. Five-digit bundles from a barcoded price mailing and 5-digit bundles from a nonbarcoded price mailing (including pieces cobundled under 11.0) may be placed on the same pallet as carrier route bundles under the following conditions:

a. A carrier route mailing must be part of the same mailing job as the barcoded price mailing and/or the nonbarcoded price mailing.

b. Pieces in the barcoded price mailing must meet the criteria for a flat under 201.3.0 or 207.26.0. These two types of flats cannot be combined in the same bundle.

c. When firm bundles, carrier route bundles, and 5-digit bundles are placed together on the same merged 5-digit scheme or merged 5-digit pallet, pieces in 5-digit bundles (other than firm bundles) must not exceed the 5% limit described in 12.1.4.

d. All possible merged 5-digit scheme and 5-digit scheme pallets must be prepared according to standards in 12.1.5.

e. The bundles from each separate mailing must be sorted together on pallets (copalletized) under 12.1.5 using presort software that is PAVE-certified.

f. A complete, signed postage statement, using the correct USPS form or an approved facsimile, must accompany each mailing job. In addition, documentation prepared by PAVE-certified software must be submitted with each mailing job. Documentation, under 708.1.0, must describe for each

"logical" pallet sortation level and each physical pallet the number of addressed pieces qualifying for each carrier route price, each Presorted price, and each automation price. Within the body of the documentation beneath the listing for the last physical pallet for each logical pallet presort destination, a separate 5% threshold summary also must be provided for each merged 5-digit scheme and each merged 5-digit logical pallet destination. *Note*: The separate 5% threshold summary must be for the mail on all of the physical pallets (i.e., the "logical" pallet) for that presort destination. This summary must describe for each 5-digit ZIP Code:

1. The total number of all addressed pieces.
2. The total number of addressed pieces sorted in carrier route bundles and firm bundles (each firm bundle is claimed as one addressed piece).
3. The total number of addressed pieces sorted in 5-digit bundles (other than firm bundles).
4. Of the total number of all addressed pieces in 12.1.1f1, the percentage of addressed pieces sorted in 5-digit bundles (other than firm bundles).

g. Portions of the mailing job that cannot be palletized must be prepared in sacks.

12.1.2 Bundle Preparation

Bundles must be prepared under the standards in 8.0.

12.1.3 Low-Volume Bundles

Carrier route and 5-digit bundles may contain fewer than six pieces when the publisher determines that such preparation improves service. Pieces in these low-volume bundles must be claimed at the applicable mixed ADC price (Outside-County) or basic price (In-County).

12.1.4 5% Threshold

Firm bundles (claimed as one addressed piece), carrier route bundles, and 5-digit bundles may be placed together on the same merged 5-digit scheme or merged 5-digit logical pallet under 12.1.5 if all of the following conditions in items 12.1.4a through 12.1.4e below are met:

a. For the purpose of calculating the 5% threshold, firm bundles (regardless of the price claimed) are added together with the number of addressed pieces in carrier route bundles.

b. The number of pieces prepared in 5-digit bundles (other than firm bundles) for any single 5-digit ZIP Code on a "logical" merged 5-digit scheme or merged 5-digit pallet must not exceed 5% of the total number of addressed pieces for the 5-digit ZIP Code on the logical pallet for that presort destination.

c. The 5% threshold is calculated separately for each 5-digit ZIP Code. For example, if a scheme contains four different 5-digit ZIP Codes, a separate 5% threshold applies to each 5-digit ZIP Code for the scheme on a merged 5-digit scheme pallet. Since 5-digit scheme bundles may not be placed on merged pallets, pieces in 5-digit scheme bundles do not count as 5-digit sorted pieces for purposes of determining the 5% limit.

d. When firm bundles, other than those claimed at carrier route prices, are placed on a merged 5-digit scheme or a merged 5-digit pallet, addressed pieces in all corresponding 5-digit bundles up to 5% also must be merged. If the number of addressed pieces placed in 5-digit bundles (for an individual 5-digit ZIP Code) exceeds the 5% threshold, the mailer may place a portion of the addressed pieces (up to 5%) on a merged 5-digit scheme or a merged 5-digit pallet. Mailers are encouraged, but not required, to include such pieces on a merged pallet in this sequence: nonbarcoded price bundles, followed by barcoded price bundles.

e. For the purpose of determining the 5% threshold, addressed pieces in low-volume carrier route bundles count as carrier route sorted pieces, and addressed pieces in low-volume 5-digit bundles count as 5-digit sorted pieces, even though the mixed ADC price (Outside-County) or basic price (In-County) is paid for such pieces.

12.1.5 Pallet Preparation and Labeling

Mailers must prepare pallets of bundles in the manner and sequence listed below and under 8.0. Mailers must prepare all merged 5-digit scheme, 5-digit scheme carrier routes, 5-digit scheme, and merged 5-digit pallets that are possible in the mailing based on the volume of mail to the destination using L001 and the 5% threshold, as applicable. Mailers must label pallets according to the Line 1 and Line 2 information listed below and under 8.6. If, due to the physical size of the mailpieces, the barcoded price pieces are considered flat-size under 201.3.0 and the carrier route sorted pieces and nonbarcoded price pieces are considered irregular parcels under 401.1.6, “FLTS” must be shown as the processing category on the pallet label. If a mailing contains no barcoded price pieces and the carrier route pieces and the nonbarcoded pieces are irregular parcels, use “IRREG” for the processing category on the contents line of the pallet label. Prepare and label pallets as follows:

a. *Merged 5-digit scheme,* required; permitted only when 5-digit bundles for at least one 5-digit ZIP Code in the scheme may be merged with carrier route bundles under the 5% threshold standard in 12.1.4. May contain carrier route bundles for any 5-digit ZIP Code in a single scheme listed in L001. May also contain barcoded price 5-digit bundles and nonbarcoded price 5-digit bundles up to a maximum of 5% of the total number of pieces for each 5-digit ZIP Code in the scheme under 12.1.4. For 5-digit ZIP Codes not included in a scheme, begin preparing pallets under 12.1.5d (merged 5-digit pallet). Labeling:

   1. Line 1: use L001, Column B.
   2. Line 2: “PER” or “NEWS” as applicable; followed by “FLTS” or “IRREG” as applicable; followed by “CR/5D SCHEME.”

b. *5-digit scheme carrier routes,* required; may contain only carrier route bundles for all carrier routes in an L001 scheme when a merged 5-digit scheme pallet could not be prepared under 12.1.5a. Labeling:

   1. Line 1 use L001, Column B.
   2. Line 2: “PER” or “NEWS” as applicable; followed by “FLTS” or “IRREG” as applicable; followed by “CR-RTS SCHEME.”

c. *5-digit scheme,* not permitted for flats that meet the dimension, weight, and flexibility criteria for automation flats in 201.3.0 (including pieces in merged bundles) and not permitted for sacks or trays. Required for all other flats and irregular parcels. Five-digit scheme bundles are assigned to 5-digit pallets according to the "label to" 5-digit ZIP Code in L007. Labeling:

1. Line 1: use L001, Column B.
2. Line 2: "PER" or "NEWS" as applicable; followed by "FLTS" or "IRREG" as applicable; followed by "5D"; followed by "BARCODED" or "BC" if the pallet contains barcoded price mail; followed by "NONBARCODED" or "NBC" if the pallet contains nonbarcoded price mail; followed by "SCHEME" or "SCH."

d. *Merged 5-digit,* required; permitted only when 5-digit bundles may be merged with carrier route bundles under the 5% threshold standard in 12.1.4 for a 5-digit ZIP Code that is not part of an L001 scheme. May contain carrier route bundles, barcoded price 5-digit bundles, and nonbarcoded price 5-digit bundles. The number of pieces in 5-digit bundles is limited to 5% of the total number of pieces placed on the pallet under 12.1.4. Labeling:

1. Line 1: use city, state, and 5-digit ZIP Code destination (see 8.6.4 for military mail).
2. Line 2: "PER" or "NEWS" as applicable; followed by "FLTS" or IRREG" as applicable; followed by "CR/5D."

e. *5-digit carrier routes,* required; may contain only carrier route price bundles for the same 5-digit ZIP Code that is not part of a scheme for which a merged 5-digit pallet could not be prepared under 12.1.5d. Labeling:

1. Line 1: use city, state, and 5-digit ZIP Code destination (see 8.6.4 for military mail).
2. Line 2: "PER" or "NEWS" as applicable; followed by "FLTS" or "IRREG" as applicable; followed by "CARRIER ROUTES" or "CR-RTS."

f. *5-digit,* required; may contain only barcoded price 5-digit bundles and nonbarcoded price 5-digit bundles for the same 5-digit ZIP Code that could not be placed on a merged 5-digit pallet, or 5-digit scheme (L007) bundles (barcoded price and cobundled barcoded and nonbarcoded price pieces only). Five-digit scheme bundles are assigned to 5-digit pallets according to the OEL "label to" 5-digit ZIP Code. Labeling:

1. Line 1: use city, state, and 5-digit ZIP Code destination (see 8.6.4 for military mail).
2. Line 2: "PER" or "NEWS" as applicable; followed by "FLTS" or "IRREG" as applicable; followed by "5D"; followed by "BARCODED" or "BC" if the pallet contains barcoded price mail; followed by "NONBARCODED" or "NBC" if the pallet contains nonbarcoded price mail.

g. *3-digit*, optional; option not available for 3-digit ZIP Code prefixes marked "N" in L002. May contain carrier route price, barcoded price, and nonbarcoded price mail, including 3-digit scheme (L008) bundles (barcoded and cobundled

barcoded and nonbarcoded price pieces only). Three-digit scheme bundles are assigned to 3-digit pallets according to the "label to" 3-digit ZIP Code in L008. Labeling:

1. Line 1: use L002, Column A.
2. Line 2: "PER" or "NEWS" as applicable; followed by "FLTS" or "IRREG" as applicable; followed by "3D"; followed by "BARCODED" or "BC" if the pallet contains barcoded price mail; followed by "NONBARCODED" or "NBC" if the pallet contains nonbarcoded price mail and/or carrier route mail.

h. *SCF through mixed ADC*, use 8.10.2h through 8.10.2k, as applicable, to prepare and label SCF, ADC, Origin Mixed ADC (OMX) and mixed ADC pallet levels.

12.1.6 Basic Standards

Five-digit scheme bundles (under L007) and 3-digit scheme bundles (under L008) must be prepared. Five-digit scheme bundles may not be copalletized on any merged pallets. Five-digit bundles from an automation price mailing and 5-digit bundles from a Presorted price mailing (including pieces cobundled under 11.0) may be placed on the same pallet as carrier route bundles under the following conditions:

a. A carrier route mailing must be part of the mailing job.

b. The pieces in the carrier route price mailing, the automation price mailing, and the Presorted price mailing must be part of the same mailing job and all three mailings must be reported on the same postage statement.

c. Pieces in the automation price mailing must meet the criteria for a flat under 201.3.0. Pieces in the Presorted price mailing and the carrier route mailing must meet the criteria for a flat under 201.1.0.

d. Automation price 5-digit bundles, Presorted price 5-digit bundles, and cobundled 5-digit bundles may be copalletized with carrier route bundles only when the pieces in the 5-digit bundles do not exceed the 5% limit described in 12.1.8. Pallets of mail sorted in this manner are called "merged 5-digit" pallets. Pallets of mail sorted in this manner for which scheme sortation is also performed are called "merged 5-digit scheme" pallets. Since 5-digit scheme bundles cannot be placed on merged pallets, pieces in 5-digit scheme bundles do not count as 5-digit sorted pieces for purposes of determining the 5% limit.

e. If sortation under this section is performed, merged 5-digit scheme pallets must be prepared whenever there is enough volume of carrier route and 5-digit bundles under 8.0 and 12.1.8 to prepare such pallets.

f. The carrier route mailing must meet the eligibility criteria in 243.6.0, the automation price mailing must meet the eligibility criteria in 243.7.0, and the Presorted price mailing must meet the eligibility criteria in 243.5.0.

g. The prices are based on the level of bundle that the pieces are contained in under 243.5.0 and 243.7.0.

h. The bundles from each separate mailing must be sorted together on pallets (copalletized) using presort software that is PAVE-certified.

i. The pieces in each separate mailing must bear the applicable markings required under 245.5.0, 245.6.0, or 245.7.0, and under 202.

j. A complete, signed postage statement, using the correct USPS form or an approved facsimile, must accompany each mailing job prepared under these procedures.

k. In addition to the postage statement(s), documentation prepared by PAVE-certified software must be submitted with each copalletized mailing job that describes for each pallet sortation level and pallet the number of pieces qualifying for each applicable carrier route price, each applicable automation price, and each applicable Presorted price under 708.1.0. A separate 5% threshold summary also must be provided under 708.1.0 for each "logical" merged 5-digit scheme or "logical" merged 5-digit pallet presort destination. This 5% threshold summary must show for each 5-digit ZIP Code on the logical merged 5-digit scheme or logical merged 5-digit pallet: the total number of pieces on the pallet for the 5-digit ZIP Code; the total number of pieces sorted in carrier route bundles for the 5-digit ZIP Code; the total number of pieces sorted in 5-digit bundles for the 5-digit ZIP Code, and; of the total number of pieces for the 5-digit ZIP Code, the percentage of pieces sorted in 5-digit bundles for that 5-digit ZIP Code. This additional 5% threshold summary must appear within the body of the documentation beneath the pallet price listing for the last physical pallet for the logical pallet presort destination. Note: If there are two or more physical pallets for the same presort destination, for example, the same merged 5-digit pallet destination, these two or more physical pallets would be considered as one "logical pallet." The separate pallet summary must be for the mail on all of the physical pallets (the "logical pallet") for that presort destination.

l. Portions of the mailing job that cannot be palletized must be prepared in sacks.

12.1.7 Bundle Preparation

Bundles placed on pallets must be prepared under the standards in 8.0.

12.1.8 5%-Threshold Standard

Five-digit bundles and carrier route bundles may be placed on the same merged 5-digit scheme and merged 5-digit pallet if all of the following conditions are met:

a. The number of pieces prepared in 5-digit bundles for any single 5-digit ZIP Code on a logical merged 5-digit or merged 5-digit scheme pallet does not exceed 5% of the total number of pieces for the 5-digit ZIP Code on the pallet(s) for the presort destination. That is, the total number of pieces for a 5-digit ZIP Code in 5-digit and carrier route bundles must not be greater than the number of pieces in carrier route bundles divided by 0.95.

b. The 5% threshold is calculated separately for each 5-digit ZIP Code. For example, if a scheme contains four different 5-digit ZIP Codes, a separate 5% threshold applies to each 5-digit ZIP Code for the scheme on a merged 5-digit

scheme pallet. Since 5-digit scheme bundles may not be placed on merged pallets, pieces in 5-digit scheme bundles do not count as 5-digit sorted pieces for purposes of determining the 5% limit.

c. Except when bundles are prepared under the cobundling option in 11.0, all the mail in a logical 5-digit bundle must be able to be placed on the logical pallet under the 5% rule. A logical 5-digit bundle is all pieces for a mailing (price level) prepared in a 5-digit bundle or bundles for the same 5-digit destination. For each 5-digit ZIP Code, it is possible to have a logical 5-digit bundle of automation price mail and a logical 5-digit bundle of Presorted price mail. If the total number of pieces in a logical 5-digit bundle exceeds the 5% limit, none of the pieces for that 5-digit bundle level may be placed on a merged 5-digit or merged 5-digit scheme pallet. For some ZIP Codes, the total number of pieces prepared in logical 5-digit bundles (both an automation price 5-digit bundle and a Presorted price 5-digit bundle) may exceed 5% of the total mail for that ZIP Code, but the number of pieces for an individual automation price logical 5-digit bundle for that ZIP Code does not exceed the 5% limit nor does an individual Presorted price logical 5-digit bundle for that ZIP Code exceed the 5% limit. In such instances, mailers may choose to place all of the pieces in a logical 5-digit bundle for a single price category on the logical merged 5-digit or merged 5-digit scheme pallet so that the 5% threshold is not exceeded.

d. Except for bundles prepared under the cobundling option in 11.0, if the total number of pieces in both the logical 5-digit automation price bundle and the logical 5-digit Presorted price bundle each separately exceed 5% of the total number of pieces for the 5-digit ZIP Code, none of the pieces in 5-digit bundles may be merged with carrier route bundles on a merged 5-digit or merged 5-digit scheme pallet.

e. For mailing jobs prepared using the cobundling option in 11.0, if the total number of pieces prepared in a logical 5-digit bundle (containing automation price and Presorted price pieces) exceeds the 5% limit for a 5-digit ZIP Code in 12.1.8a, a mailer may, for each 5-digit ZIP Code, choose to place a portion of the pieces prepared in the logical 5-digit bundle on a merged 5-digit or 5-digit scheme pallet using one of the options below. Regardless of the option selected, a minimum of 10 pieces or 15 pieces as applicable must be prepared in 5-digit bundle(s) placed on the merged pallet and a minimum of 10 or 15 remaining pieces as applicable prepared in 5-digit bundle(s) not placed on the merged pallet, with the total number of pieces not exceeding the 5% limit. The options are:

    1. Place either all automation price pieces or all Presorted price pieces for the 5-digit ZIP Code on the merged pallet.

    2. Place a portion of either the automation price pieces or the Presorted price pieces for the 5-digit ZIP Code on the merged pallet.

    3. Place either all the automation price pieces plus a portion of the Presorted price pieces or all the Presorted price pieces plus a portion of the automation price pieces for the 5-digit ZIP Code on the merged pallet.

12.1.9 Pallet Preparation and Labeling

Mailers must prepare pallets of bundles in the manner and sequence listed below and under 8.0. Mailers must prepare all merged 5-digit scheme, 5-digit scheme carrier routes, 5-digit scheme, and merged 5-digit pallets that are possible in the mailing based on the volume of mail to the destination using L001 and the 5% threshold. Mailers must label pallets according to the Line 1 and Line 2 information listed below and under 8.6.

a. *Merged 5-digit scheme,* required, permitted only when 5-digit bundles for at least one 5-digit ZIP Code in the scheme may be merged with carrier route bundles under the 5% threshold standard in 12.1.8. May contain carrier route bundles for any 5-digit ZIP Code in a single scheme listed in L001. May also contain automation price 5-digit bundles and Presorted price 5-digit bundles up to a maximum of 5% of the total number of pieces for each 5-digit ZIP Code in the scheme under 12.1.8. For 5-digit ZIP Codes not included in a scheme, begin preparing pallets under 12.1.9c (merged 5-digit pallet). Labeling:

   1. Line 1: use L001, Column B.
   2. Line 2: “STD FLTS CR/5D SCHEME.”

b. *5-digit scheme carrier routes,* required, may contain only carrier route bundles for all carrier routes in an L001 scheme when a merged 5-digit scheme pallet could not be prepared under 12.1.9a. Labeling:

   1. Line 1: use L001, Column B.
   2. Line 2: “STD FLTS CR-RTS SCHEME.”

c. *Merged 5-digit,* required, permitted only when 5-digit bundles may be merged with carrier route bundles under the 5% threshold standard in 12.1.8 for a 5-digit ZIP Code that is not part of an L001 scheme. May contain carrier route price bundles, automation price 5-digit bundles, and Presorted price 5-digit bundles. The number of pieces in 5-digit bundles is limited to 5% of the total number of pieces placed on the pallet under 12.1.8. Labeling:

   1. Line 1: use city, state, and 5-digit ZIP Code destination (see 8.6.4 for military mail).
   2. Line 2: “STD FLTS CR/5D.”

d. *5-digit carrier routes,* required, may contain only carrier route price bundles for the same 5-digit ZIP Code that is not part of a scheme and for which a merged 5-digit pallet could not be prepared under 12.1.9c. Labeling:

   1. Line 1: use city, state, and 5-digit ZIP Code destination (see 8.6.4 for military mail).
   2. Line 2: “STD FLTS”; followed by “CARRIER ROUTES” or “CR-RTS.”

e. *5-digit,* required, may contain only automation price 5-digit bundles and Presorted price 5-digit bundles for the same 5-digit ZIP Code that could not be placed on a merged 5-digit pallet, or 5-digit scheme (L007) bundles (automation price and cobundled automation and Presorted price pieces only). Five-digit scheme bundles are assigned to 5-digit pallets according to the “label to” 5-digit ZIP Code in L007. Labeling:

1. Line 1: use city, state, and 5-digit ZIP Code destination (see 8.6.4 for military mail).
2. Line 2: “STD FLTS 5D”; followed by “BARCODED” or “BC” if the pallet contains automation price mail; followed by “NONBARCODED” or “NBC” if the pallet contains Presorted price mail.

f. *3-digit,* optional, option not available for 3-digit ZIP Code prefixes marked “N” in L002. May contain carrier route price, automation price, and Presorted price mail, including 3-digit scheme (L008) bundles (automation and cobundled automation and Presorted price pieces only). Three-digit scheme bundles are assigned to 3-digit pallets according to the “label to” 3-digit ZIP Code in L008. Labeling:

1. Line 1: use L002, Column A.
2. Line 2: “STD FLTS 3D”; followed by “BARCODED” or “BC” if the pallet contains automation price mail; followed by “NONBARCODED” or “NBC” if the pallet contains Presorted price mail and/or carrier route price mail.

g. *SCF,* required, may contain carrier route price, automation price, and Presorted price bundles. Labeling:

1. Line 1: use L002, Column C.
2. Line 2: “STD FLTS SCF”; followed by “BARCODED” or “BC” if the pallet contains automation price mail; followed by “NONBARCODED” or “NBC” if the pallet contains Presorted price mail and/or carrier route price mail.

h. *ASF,* required, except that an ASF sort may not be required if using bundle reallocation under 8.13.3. May contain carrier route price, automation price, and/or Presorted price bundles. Sort ADC bundles to ASF pallets based on the “label to” ZIP Code for the ADC destination of the bundle in L004. At the mailer’s option, sort appropriate mixed ADC bundles to ASF pallets based on the “label to” ZIP Code for the ADC destination of the bundle in L010. All optional mixed ADC bundles on ASF pallets must contain only pieces destinating within the ASF as shown in 6.3. See 246.3.0 for additional requirements for DNDC price eligibility. Labeling:

1. Line 1: use L602, Column B.
2. Line 2: “STD FLTS ASF”; followed by “BARCODED” or “BC” if the pallet contains automation price mail; followed by “NONBARCODED” or “NBC” if the pallet contains Presorted price mail and/or carrier route price mail.

i. *NDC,* required, may contain carrier route price, automation price, and/or Presorted price bundles. Sort ADC bundles to NDC pallets based on the “label to” ZIP Code for the ADC destination of the bundle in L004. At the mailer’s option, sort appropriate mixed ADC bundles to NDC pallets based on the “label to” ZIP Code for the ADC destination of the bundle in L010. All optional mixed ADC bundles on NDC pallets must contain only pieces destinating within the NDC as shown in 6.3. See 246.3.0 for additional requirements for DNDC price eligibility. Labeling:

1. Line 1: use L601, Column B.

2. Line 2: “STD FLTS NDC”; followed by “BARCODED” or “BC” if the pallet contains automation price mail; followed by “NONBARCODED” or “NBC” if the pallet contains Presorted price mail and/or carrier route price mail.

13.0 Merging Bundles of Flats on Pallets Using the City State Product and a 5% Threshold

13.1 Periodicals

13.1.1 Basic Standards

Five-digit scheme bundles (using L007) and 3-digit scheme bundles (using L008) must be prepared according to standards in 13.1.4. Five-digit scheme bundles and 3-digit scheme bundles may not be copalletized on any merged pallets. Five-digit bundles from a barcoded price mailing and 5-digit bundles from a nonbarcoded price mailing (including pieces cobundled under 11.0) may be placed on the same pallet as carrier route bundles under the following conditions:

a. A carrier route mailing must be part of the same mailing job as the barcoded price mailing and/or the nonbarcoded price mailing.

b. Pieces in the barcoded price mailing must meet the criteria for a flat under 201.3.0 or 207.26.0. These two types of flats cannot be combined in the same bundle.

c. Mailers must use the Carrier Route Indicators field in the City State Product and the 5% limit criteria in 13.1.4 to prepare the mailing. The mailing must be entered no later than 90 days after the release date of the City State Product used.

d. When firm bundles, carrier route bundles, and 5-digit bundles are placed together on the same merged 5-digit scheme or merged 5-digit pallet according to standards in 13.1.4 and 13.1.5, the following conditions also apply:

   1. For 5-digit ZIP Codes identified with an “A” or “C” indicator in the City State Product, merged 5-digit scheme and merged 5-digit pallets may be prepared with no limit to the number of addressed pieces placed in 5-digit bundles.

   2. For 5-digit ZIP Codes identified with a “B” or “D” indicator in the City State Product, the number of addressed pieces placed in 5-digit bundles (other than firm bundles) must not exceed 5% of the total number of addressed pieces placed on the merged 5-digit scheme or merged 5-digit pallet, for each corresponding 5-digit ZIP Code. For merged 5-digit scheme pallets, the 5% threshold is calculated separately for each individual 5-digit ZIP Code.

e. All possible merged 5-digit scheme, 5-digit scheme carrier routes, and 5-digit scheme pallets must be prepared according to standards in 13.1.5.

f. The bundles from each separate mailing must be sorted together on pallets (copalletized) under 13.1.5 using presort software that is PAVE-certified.

g. A complete, signed postage statement, using the correct USPS form or an approved facsimile, must accompany each mailing job. In addition, documentation produced by PAVE-certified software must be submitted with each mailing job. Documentation, under 708.1.0, must describe for each "logical" pallet sortation level and each physical pallet the number of addressed pieces qualifying for each carrier route price, each nonbarcoded price, and each barcoded price. Within the body of the documentation beneath the listing for the last physical pallet for each logical pallet presort destination, a separate 5% threshold summary also must be provided for each merged 5-digit scheme and each merged 5-digit logical pallet destination that contains mail for one or more 5-digit ZIP Codes with a "B" or "D" indicator in the City State Product. *Note:* The separate 5% threshold summary must be for the mail on all of the physical pallets (i.e., the "logical" pallet) for that presort destination. This summary must describe for each 5-digit ZIP Code:

1. The total number of all addressed pieces.
2. The total number of addressed pieces sorted in carrier route bundles and firm bundles (each firm bundle is claimed as one addressed piece).
3. The total number of addressed pieces sorted in 5-digit bundles (other than firm bundles).
4. Of the total number of all addressed pieces in 13.1.1g1, the percentage of addressed pieces sorted in 5-digit bundles (other than firm bundles).

h. Portions of the mailing job that cannot be palletized must be prepared in sacks.

13.1.2 Bundle Preparation

Bundles must be prepared under the standards in 8.0.

13.1.3 Low-Volume Bundles

Carrier route and 5-digit bundles may contain fewer than six pieces when the publisher determines that such preparation improves service. Pieces in these low-volume bundles must be claimed at the applicable mixed ADC price (Outside-County) or basic price (In-County).

13.1.4 5% Threshold—5-Digit ZIP Codes Identified with a "B" or "D" Indicator

Firm bundles (claimed as one addressed piece), carrier route bundles, and 5-digit bundles may be placed together on the same merged 5-digit scheme or merged 5-digit logical pallet under 13.1.5 if all of the following conditions in items 13.1.4a through 13.1.4e below are met:

a. For the purpose of calculating the 5% threshold, firm bundles (regardless of the price claimed) are added together with the number of addressed pieces in carrier route bundles.

b. The number of pieces prepared in 5-digit bundles (other than firm bundles) for any single 5-digit ZIP Code with a "B" or "D" indicator (in the City State Product) on a logical merged 5-digit scheme or merged 5-digit pallet must not exceed 5% of the total number of addressed pieces for the 5-digit ZIP Code on the logical pallet for the presort destination. Five-digit ZIP Codes with an "A" or "C" indicator (in the City State Product) are not subject to the 5% limit.

c. The 5% threshold is calculated separately for each 5-digit ZIP Code with a "B" or "D" indicator. For example, if a scheme contains four different 5-digit ZIP Codes, a separate 5% threshold applies to each 5-digit ZIP Code with a "B" or "D" indicator for the scheme on a merged 5-digit scheme pallet. (5-digit ZIP Codes with an "A" or "C" indicator are not subject to the 5% limit.) Since 5-digit scheme bundles may not be placed on merged pallets, pieces in 5-digit scheme bundles do not count as 5-digit sorted pieces for purposes of determining the 5% limit.

d. When firm bundles, other than those claimed at carrier route prices, are placed on a merged 5-digit scheme or a merged 5-digit pallet, addressed pieces in all corresponding 5-digit bundles up to 5% also must be merged. If the number of addressed pieces placed in 5-digit bundles (for an individual 5-digit ZIP Code) exceeds the 5% threshold, the mailer may place a portion of the addressed pieces (up to 5%) on a merged 5-digit scheme or a merged 5-digit pallet. Mailers are encouraged, but not required, to include such pieces on a merged pallet in this sequence: presorted price bundles, followed by cobundles (if using 11.0), followed by automation price bundles.

e. For the purpose of determining the 5% threshold, addressed pieces in low-volume carrier route bundles count as carrier route sorted pieces, and addressed pieces in low-volume 5-digit bundles count as 5-digit sorted pieces, even though the mixed ADC price (Outside-County) or basic price (In-County) is paid for such pieces.

13.1.5 Pallet Preparation and Labeling

Mailers must prepare pallets of bundles in the manner and sequence listed below and under 8.0. Mailers must prepare all merged 5-digit scheme, 5-digit scheme carrier routes, 5-digit scheme, and merged 5-digit pallets that are possible in the mailing based on the volume of mail to the destination (8.0) using L001, the City State Product, and the 5% threshold (13.1.4), as applicable. Mailers must label pallets according to the Line 1 and Line 2 information listed below and under 8.6. If, due to the physical size of the mailpieces, the barcoded price pieces are considered flat-size under 201.3.0 and the carrier route sorted pieces and nonbarcoded price pieces are considered irregular parcels under 201.1.0, "FLTS" must be shown as the processing category on the pallet label. If a mailing contains no barcoded price pieces and the carrier route pieces and the nonbarcoded ofpieces are irregular parcels, use "IRREG" for the processing category on the contents line of the pallet label. Prepare and label pallets as follows:

a. *Merged 5-digit scheme*, required; for schemes that contain at least one 5-digit ZIP Code that has an "A" or "C" indicator in the City State Product, the pallet contains 1) carrier route bundles for all 5-digit ZIP Codes in the scheme, 2) 5-digit barcoded price and 5-digit nonbarcoded price bundles for those 5-digit ZIP Codes in the scheme with an "A" or "C" indicator in the City State Product, and 3) 5-digit barcoded price and/or 5-digit nonbarcoded price bundles for those 5-digit ZIP Codes in the scheme with a "B" or "D" indicator when the number of pieces in the 5-digit bundle(s) does not exceed 5% of the total number of pieces for that 5-digit ZIP Code under 13.1.4. For schemes in which all 5-digit ZIP Codes have "B" or "D" indicators and for which there is at least one 5-digit ZIP Code for which 5-digit bundles may be placed on the pallet

under the 5% limit in 13.1.4, place all carrier route bundles plus the 5-digit bundles within the 5% limit on the pallet. For schemes in which all 5-digit ZIP Codes have "B" or "D" indicators and for which there are no 5-digit ZIP Codes for which 5-digit bundles may be placed on the pallet under the 5% limit, do not prepare a merged 5-digit scheme pallet (sort bundles to pallets under 13.1.5b through 13.1.5h). Labeling:

1. Line 1: use L001, Column B.
2. Line 2: "PER" or "NEWS" as applicable; followed by "FLTS" or "IRREG" as applicable; and followed by "CR/5D SCHEME."

b. *5-digit scheme carrier routes,* required, may contain only carrier route bundles for all carrier routes in an L001 scheme for which all 5-digit ZIP Codes in the scheme have a "B" or "D" indicator and for which no 5-digit bundles could be placed on a merged 5-digit scheme pallet with the carrier route bundles because the 5-digit bundles exceeded the 5% threshold. Labeling:

1. Line 1: use L001, Column B.
2. Line 2: "PER" or "NEWS" as applicable; followed by "FLTS" or "IRREG" as applicable; and followed by "CR-RTS SCHEME."

c. *5-digit scheme*, not permitted for flats that meet the dimension, weight, and flexibility criteria for automation flats in 201.3.0 (including pieces in merged bundles) and not permitted for sacks or trays. Required for all other flats and irregular parcels. May contain only 5-digit bundles of barcoded price and nonbarcoded price mail for the same 5-digit scheme under L001 for which one or more 5-digit ZIP Codes in the scheme had a "B" or "D" indicator in the City State Product, and the 5-digit bundles could not be placed on a merged 5-digit scheme pallet (the pieces exceeded the 5% threshold). Labeling:

1. Line 1: use L001, Column B.
2. Line 2: "PER" or "NEWS" as applicable; followed by "FLTS" or "IRREG" as applicable; followed by "5D"; followed by "BARCODED" or "BC" if the pallet contains barcoded price mail; followed by "NONBARCODED" or "NBC" if the pallet contains nonbarcoded price mail; and followed by "SCHEME" or "SCH."

d. *Merged 5-digit*, required, may contain carrier route bundles, barcoded price 5-digit bundles, and nonbarcoded price 5-digit bundles for those 5-digit ZIP Codes that are not part of a scheme. For 5-digit ZIP Codes with an "A" or "C" indicator in the City State Product, there is no limit on the number of pieces in 5-digit bundles that may be placed on the pallet and a merged 5-digit pallet is prepared even if there are no 5-digit bundles for that ZIP Code. For those 5-digit ZIP Codes with a "B" or "D" indicator in the City State Product, the number of pieces in 5-digit bundles is limited to 5% of the total number of pieces for the 5-digit pallet destination under 13.1.4. However, if no 5-digit bundles for ZIP Codes with "B" or "D" indicators can be placed on this level pallet under the 5% limit, do not prepare this a merged 5-digit pallet (sort bundles under 13.1.5e through 13.1.5h). Labeling:

1. Line 1: use city, state, and 5-digit ZIP Code destination (see 8.6.4 for military mail).
2. Line 2: “PER” or “NEWS” as applicable; followed by “FLTS” or IRREG” as applicable; and followed by “CR/5D.”

e. *5-digit carrier routes,* required, may contain only carrier route price bundles for the same 5-digit ZIP Code that is not part of a scheme and that could not be placed on a merged 5-digit pallet. Labeling:

1. Line 1: use city, state, and 5-digit ZIP Code destination (see 8.6.4 for military mail).
2. Line 2: “PER” or “NEWS” as applicable; followed by “FLTS” or “IRREG” as applicable; and followed by “CARRIER ROUTES” or “CR-RTS.”

f. *5-digit,* required, may contain only barcoded price 5-digit bundles and nonbarcoded price 5-digit bundles for the same 5-digit ZIP Code that could not be placed on a merged 5-digit pallet, or 5-digit scheme (L007) bundles (barcoded price and cobundled barcoded and nonbarcoded price pieces only). Five-digit scheme bundles are assigned to 5-digit pallets according to the “label to” 5-digit ZIP Code in L007. Labeling:

1. Line 1: use city, state, and 5-digit ZIP Code destination (see 8.6.4 for military mail).
2. Line 2: “PER” or “NEWS” as applicable; followed by “FLTS” or “IRREG” as applicable; followed by “5D”; followed by “BARCODED” or “BC” if the pallet contains barcoded price mail; and followed by “NONBARCODED” or “NBC” if the pallet contains nonbarcoded price mail.

g. *3-digit,* optional, option not available for 3-digit ZIP Code prefixes marked “N” in L002. May contain carrier route price, barcoded price, and nonbarcoded price mail, including 3-digit scheme (L008) bundles (barcoded and cobundled barcoded and nonbarcoded price pieces only). Three-digit scheme bundles are assigned to 3-digit pallets according to the “label to” 3-digit ZIP Code in L008. Labeling:

1. Line 1: use L002, Column A.
2. Line 2: “PER” or “NEWS” as applicable; followed by “FLTS” or IRREG” as applicable; followed by “3D”; followed by “BARCODED” or “BC” if the pallet contains barcoded price mail; and followed by “NONBARCODED” or “NBC” if the pallet contains nonbarcoded price mail and/or carrier route mail.

h. *SCF through mixed ADC,* use 8.10.2h through 8.10.2k, as applicable, to prepare and label SCF, ADC, Origin Mixed ADC (OMX) and mixed ADC pallet levels.

13.2 Standard Mail

13.2.1 Basic Standards

Five-digit scheme bundles (under L007) and 3-digit scheme bundles (under L008) must be prepared. Five-digit scheme bundles may not be copalletized on any merged pallets. Five-digit bundles from an automation price mailing and 5-digit

bundles from a Presorted price mailing (including pieces cobundled under 11.0) may be placed on the same pallet as carrier route bundles under the following conditions:

a. A carrier route mailing must be part of the mailing job.

b. The pieces in the carrier route price mailing, the automation price mailing, and the Presorted price mailing must be part of the same mailing job, and all three mailings must be reported on the same postage statement.

c. Pieces in the automation price mailing must meet the criteria for a flat under 201.3.0. Pieces in the Presorted price mailing and the carrier route mailing must meet the criteria for a flat under 201.1.1.

d. Mailers must use the Carrier Route Indicators field in the City State Product and the 5% limit criteria in 13.2.3 to prepare the mailing. The mailing must be entered no later than 90 days after the release date of the City State Product used.

e. Automation price 5-digit bundles, Presorted price 5-digit bundles, and cobundled 5-digit bundles may be copalletized with carrier route bundles and firm bundles on merged 5-digit or merged 5-digit scheme pallets as follows:

   1. For 5-digit ZIP Codes with an “A” or “C” indicator in the Carrier Route Indicators field in the City State Product, carrier route and 5-digit bundles may be merged with no limit on the number of pieces in 5-digit bundles placed on the pallet. 5-digit scheme bundles may not be used.

   2. For 5-digit ZIP Codes with a “B” or “D” indicator in the Carrier Route Indicators field in the City State Product, the pieces in the 5-digit bundles must not exceed 5% of the total number of pieces for each individual 5-digit ZIP Code on the pallet as described in 13.2.3. Since 5-digit scheme bundles cannot be placed on merged pallets, pieces in 5-digit scheme bundles do not count as 5-digit sorted pieces for purposes of determining the 5% limit.

f. If sortation under this section is performed, then merged 5-digit scheme pallets must be prepared whenever there is enough volume of carrier route and 5-digit bundles under 8.0 to prepare such pallets using the criteria in 13.2.1e and the sortation criteria in 13.2.4.

g. The carrier route mailing must meet the eligibility criteria in 243.6.0, the automation price mailing must meet the eligibility criteria in 243.7.0, and the Presorted price mailing must meet the eligibility criteria in 243.5.0.

h. The prices are based on the level of bundle that the pieces are contained in under 243.5.0 and 243.7.0.

i. The pieces in each separate mailing must bear the applicable markings required under 245.5.0, 245.6.0, or 245.7.0 and under 202.

j. The bundles from each separate mailing must be sorted together on pallets (copalletized) using presort software that is PAVE-certified.

k. A complete, signed postage statement, using the correct USPS form or an approved facsimile, must accompany each mailing job prepared under these procedures.

l. In addition to the applicable postage statement, documentation produced by PAVE-certified software must be submitted with each copalletized mailing job that describes for each pallet sortation level and pallet the number of pieces qualifying for each applicable carrier route price, each applicable automation price, and each applicable Presorted price. A separate 5% threshold summary also must be provided under 708.1.0 for each "logical" merged 5-digit scheme or "logical" merged 5-digit pallet presort destination that contains mail for one or more 5-digit ZIP Codes with a "B" or "D" indicator in the City State Product. This 5% threshold summary must show for each 5-digit ZIP Code with a "B" or "D" indicator on the logical merged 5-digit scheme or logical merged 5-digit pallet: the total number of pieces on the pallet for the 5-digit ZIP Code; the total number of pieces sorted in carrier route bundles for the 5-digit ZIP Code; the total number of pieces sorted in 5-digit bundles for the 5-digit ZIP Code, and; of the total number of pieces for the 5-digit ZIP Code, the percentage of pieces sorted in 5-digit bundles for that 5-digit ZIP Code. This additional 5% threshold summary must appear within the body of the documentation beneath the pallet price listing for the last physical pallet for the logical pallet presort destination. *Note:* If there are two or more physical pallets for the same presort destination, for example, the same merged 5-digit pallet destination, these two or more physical pallets would be considered as one "logical pallet." The separate pallet summary must be for the mail on all of the physical pallets (the "logical pallet") for that presort destination.

m. Portions of the mailing job that cannot be palletized must be prepared in sacks.

13.2.2 Bundle Preparation

Bundles placed on pallets must be prepared under the standards in 8.0.

13.2.3 5% Threshold Standard

Five-digit bundles, carrier route bundles, and firm bundles may be placed on the same merged 5-digit scheme or merged 5-digit pallet under 13.2.4 if all of the following conditions are met:

a. The number of pieces prepared in 5-digit bundles for any single 5-digit ZIP Code with a "B" or "D" indicator on a logical merged 5-digit or merged 5-digit scheme pallet does not exceed 5% of the total number of pieces for the 5-digit ZIP Code on the logical pallet for the presort destination. That is, the total number of pieces for a 5-digit ZIP Code in 5-digit and carrier route bundles must not be greater than the number of pieces in carrier route bundles divided by 0.95. 5-digit ZIP Codes with an "A" or "C" indicator are not subject to the 5% limit.

b. The 5% threshold is calculated separately for each 5-digit ZIP Code with a "B" or "D" indicator. For example, if a scheme contains four different 5-digit ZIP Codes, a separate 5% threshold applies to each 5-digit ZIP Code with a "B" or "D" indicator for the scheme on a merged 5-digit scheme pallet. (Five-digit ZIP Codes with an "A" or "C" indicator are not subject to the 5% limit.) Since 5-digit

scheme bundles cannot be placed on merged pallets, pieces in 5-digit scheme bundles do not count as 5-digit sorted pieces for purposes of determining the 5% limit.

c. Except when bundles are prepared under the cobundling option in 11.0, all mail in a logical 5-digit bundle for a 5-digit ZIP Code with a “B” or “D” indicator must be able to be placed on the logical pallet under the 5% rule. A logical 5-digit bundle is all pieces for a mailing (price level) prepared in a 5-digit bundle or bundles for the same 5-digit destination. For each 5-digit ZIP Code, it is possible to have a logical 5-digit bundle of automation price mail and a logical 5-digit bundle of Presorted price mail. If the total number of pieces in a logical 5-digit bundle exceeds the 5% limit, none of the pieces for that 5-digit bundle level may be placed on a merged 5-digit or merged 5-digit scheme pallet. For some ZIP Codes, the total number of pieces prepared in logical 5-digit bundles (both an automation price logical 5-digit bundle and a Presorted price logical 5-digit bundle) may exceed 5% of the total mail for that ZIP Code, but the number of pieces for an individual automation price logical 5-digit bundle for that ZIP Code does not exceed the 5% limit nor does an individual Presorted price logical 5-digit bundle for that ZIP Code exceed the 5% limit. In such instances, mailers may choose to place all of the pieces in a logical 5-digit bundle for a single price category on the logical merged 5-digit or merged 5-digit scheme pallet so that the 5% threshold is not exceeded.

d. Except for bundles prepared under the cobundling option in 11.0, if the total number of pieces in both the logical 5-digit automation price bundle and the logical 5-digit Presorted price bundle each separately exceed 5% of the total number of pieces for the 5-digit ZIP Code with a “B” or “D” indicator, none of the pieces in 5-digit bundles may be merged with carrier route bundles on a merged 5-digit or merged 5-digit scheme pallet.

e. For mailing jobs prepared using the cobundling option in 11.0, if the total number of pieces prepared in a logical 5-digit bundle (containing automation price and Presorted price pieces) exceeds the 5% limit for a 5-digit ZIP Code in 13.2.3a, a mailer may, for each 5-digit ZIP Code, choose to place a portion of the pieces prepared in the logical 5-digit bundle on a merged 5-digit or 5-digit scheme pallet using one of the options below. Regardless of the option selected, a minimum of 10 pieces or 15 pieces as applicable must be prepared in 5-digit bundle(s) placed on the merged pallet and a minimum of 10 or 15 remaining pieces as applicable prepared in 5-digit bundle(s) not placed on the merged pallet, with the total number of pieces not exceeding the 5% limit. The options are:

    1. Place either all automation price pieces or all Presorted price pieces for the 5-digit ZIP Code on the merged pallet.

    2. Place a portion of either the automation price pieces or the Presorted price pieces for the 5-digit ZIP Code on the merged pallet.

    3. Place either all the automation price pieces plus a portion of the Presorted price pieces or all the Presorted price pieces plus a portion of the automation price pieces for the 5-digit ZIP Code on the merged pallet.

13.2.4 Pallet Preparation and Labeling

Mailers must prepare pallets of bundles in the manner and sequence listed below and under 8.0. Mailers must prepare all merged 5-digit scheme, 5-digit scheme carrier routes, 5-digit scheme, and merged 5-digit pallets that are possible in the mailing based on the volume of mail to the destination using L001, the City State Product, and the 5% threshold. Mailers must label pallets according to the Line 1 and Line 2 information listed below and under 8.6.

a. *Merged 5-digit scheme,* required; for schemes that contain at least one 5-digit ZIP Code that has an "A" or "C" indicator in the City State Product, the pallet contains: carrier route bundles for all 5-digit ZIP Codes in the scheme; 5-digit automation price and 5-digit Presorted price bundles for those 5-digit ZIP Codes in the scheme with an "A" or "C" indicator in the City State Product; and 5-digit automation price and/or 5-digit Presorted price bundles for those 5-digit ZIP Codes in the scheme with a "B" or "D" indicator when the number of pieces in the 5-digit bundle(s) does not exceed 5% of the total number of pieces for that 5-digit ZIP Code under 13.2.3. For schemes in which all 5-digit ZIP Codes have "B" or "D" indicators and for which there is at least one 5-digit ZIP Code for which 5-digit bundles may be placed on the pallet under the 5% limit in 13.2.3, place all carrier route bundles plus the 5-digit bundles within the 5% limit on the pallet. For schemes in which all 5-digit ZIP Codes have "B" or "D" indicators and for which there are no 5-digit ZIP Codes for which 5-digit bundles may be placed on the pallet under the 5% limit, do not prepare a merged 5-digit scheme pallet (sort bundles to pallets under 13.2.4b through 13.2.4i). Labeling:

   1. Line 1: use L001, Column B.
   2. Line 2: "STD FLTS CR/5D SCHEME."

b. *5-digit scheme carrier routes,* required, may contain only carrier route bundles for all carrier routes in an L001 scheme for which all 5-digit ZIP Codes in the scheme have a "B" or "D" indicator and for which no 5-digit bundles could be placed on a merged 5-digit scheme pallet with the carrier route bundles because the 5-digit bundles exceeded the 5% threshold. Labeling:

   1. Line 1: use L001, Column B.
   2. Line 2: "STD FLTS CR-RTS SCHEME."

c. *Merged 5-digit,* required, may contain carrier route bundles, automation price 5-digit bundles, and Presorted price 5-digit bundles for those 5-digit ZIP Codes that are not part of a scheme. For 5-digit ZIP Codes with an "A" or "C" indicator in the City State Product, there is no limit on the number of pieces in 5-digit bundles that may be placed on the pallet, and a merged 5-digit pallet is prepared even if there are no 5-digit bundles for that ZIP Code. For those 5-digit ZIP Codes with a "B" or "D" indicator in the City State Product, the number of pieces in 5-digit bundles is limited to 5% of the total number of pieces for the 5-digit pallet destination under 13.2.3. However, if no 5-digit bundles for ZIP Codes with "B" or "D" indicators can be placed on this level pallet under the 5% limit, do not prepare a merged 5-digit pallet (sort bundles to pallets under 13.2.4d through 13.2.4i). Labeling:

1. Line 1: use city, state abbreviation, and 5-digit ZIP Code destination (see 8.6.4 for military mail).
2. Line 2: "STD FLTS CR/5D."

d. *5-digit carrier routes*, required, may contain only carrier route price bundles for the same 5-digit ZIP Code that is not part of a scheme and that could not be placed on a merged 5-digit pallet. Labeling:

1. Line 1: use city, state, and 5-digit ZIP Code destination (see 8.6.4 for military mail).
2. Line 2: "STD FLTS," followed by "CARRIER ROUTES" or "CR-RTS."

e. *5-digit*, required, may contain only automation price 5-digit bundles and Presorted price 5-digit bundles for the same 5-digit ZIP Code that could not be placed on a merged 5-digit pallet, or 5-digit scheme (L007) bundles (automation price and cobundled automation and Presorted price pieces only). Five-digit scheme bundles are assigned to 5-digit pallets according to the "label to" 5-digit ZIP Code in L007. Labeling:

1. Line 1: use city, state, and 5-digit ZIP Code destination (see 8.6.4 for military mail).
2. Line 2: "STD FLTS 5D"; followed by "BARCODED" or "BC" if the pallet contains automation price mail; and followed by "NONBARCODED" or "NBC" if the pallet contains Presorted price mail.

f. *3-digit,* optional, option not available for 3-digit ZIP Code prefixes marked "N" in L002. May contain carrier route price, automation price, and Presorted price mail, including 3-digit scheme (L008) bundles (automation and cobundled automation and Presorted price pieces only). Three-digit scheme bundles are assigned to 3-digit pallets according to the "label to" 3-digit ZIP Code in L008. Labeling:

1. Line 1: use L002, Column A.
2. Line 2: "STD FLTS 3D"; followed by "BARCODED" or "BC" if the pallet contains automation price mail; and followed by "NONBARCODED" or "NBC" if the pallet contains Presorted price mail and/or carrier route price mail.

g. *SCF,* required, may contain carrier route price, automation price, and Presorted price bundles. Labeling:

1. Line 1: use L002, Column C.
2. Line 2: "STD FLTS SCF"; followed by "BARCODED" or "BC" if the pallet contains automation price mail; and followed by "NONBARCODED" or "NBC" if the pallet contains Presorted price mail and/or carrier route price mail.

h. *ASF,* required, except that an ASF sort may not be required if using bundle reallocation under 8.13.3. May contain carrier route price, automation price, and/or Presorted price bundles. Sort ADC bundles to ASF pallets based on the "label to" ZIP Code for the ADC destination of the bundle in L004. At the mailer's option, sort appropriate mixed ADC bundles to ASF pallets based on

the "label to" ZIP Code for the ADC destination of the bundle in L010. All optional mixed ADC bundles on ASF pallets must contain only pieces destinating within the ASF as shown in 6.3. See 246.3.0 for additional requirements for DNDC price eligibility. Labeling:

1. Line 1: use L602, Column B.
2. Line 2: "STD FLTS ASF"; followed by "BARCODED" or "BC" if the pallet contains automation price mail; and followed by "NONBARCODED" or "NBC" if the pallet contains Presorted price mail and/or carrier route price mail.

i. *NDC,* required, may contain carrier route price, automation price, and/or Presorted price bundles. Sort ADC bundles to NDC pallets based on the "label to" ZIP Code for the ADC destination of the bundle in L004. At the mailer's option, sort appropriate mixed ADC bundles to NDC pallets based on the "label to" ZIP Code for the ADC destination of the bundle in L010. All optional mixed ADC bundles on NDC pallets must contain only pieces destinating within the NDC as shown in 6.3. See 263.3.0 for additional requirements for DNDC price eligibility. Labeling:

1. Line 1: use L601, Column B.
2. Line 2: "STD FLTS NDC," followed by "BARCODED" or "BC" if the pallet contains automation price mail; and followed by "NONBARCODED" or "NBC" if the pallet contains Presorted price mail and/or carrier route price mail.

14.0 Combining Bundles of Flats Within FSS Zones

14.1 General

[3-3-14] [1-26-14] Presorted and basic carrier route Standard Mail flats, and all Bound Printed Matter (BPM) presorted and carrier route flats and Periodicals flats meeting the standards in 201.3.2, must be consolidated into 5-digit FSS scheme bundles and placed on pallets, in sacks, or in approved alternate containers, for 5-digit FSS scheme ZIP Code combinations within the same facility. Mailings that include 10 or more pieces of Standard Mail flats, 6 or more pieces of Periodicals flats or 10 or more pieces (or 10 or more pounds) of BPM flats to a FSS scheme, must be prepared in FSS scheme bundles for that 5-digit FSS scheme. Mailers may optionally prepare scheme pools with less than those minimums and may prepare an FSS scheme bundle if there is a minimum of 3 inches per bundle. Mailings of nonpresorted BPM flats may be included in FSS preparation, but will not be eligible for presorted or carrier route prices. The Postal Service also recommends the use of flat trays in lieu of sacks for FSS bundles. Bundles of flats prepared to FSS zones also may be combined with bundles of flats not intended for FSS processing when prepared to less finely presorted containers in accordance with these standards and the standards in 8.0. Mailers must place qualifying mailpieces from all price categories into a separate combined pool for each individual 5-digit FSS-scheme combination, and then prepare bundles of uniform size from those pieces. Mailpieces that meet the eligibility standards for 5-digit prices, basic and high

density carrier route prices, or BPM presort or carrier route prices will continue to be eligible for these prices when prepared in accordance with the FSS preparation standards. Saturation price Standard Mail and Periodicals flats are not eligible for preparation under this option. High Density and High-Density Plus Standard Mail flats that meet the physical requirements in 201.3.0 may be included when prepared in accordance with these standards. Mailpieces and bundles must also be prepared as follows:

a. Bundles for all FSS schemes must be identified as a 5-digit scheme presort with an optional endorsement line under 708.7.0; or when authorized, using a red Label 5 SCH barcoded pressure-sensitive bundle label.

b. It is recommended that all Standard Mail and Periodicals pieces placed into an FSS pool be barcoded, and bear an accurate delivery point Intelligent Mail barcode with an accurate 11-digit routing code.

c. It is recommended that nonautomation flats be barcoded to the finest extent possible.

d. All pieces for each combined mailpiece pool must be prepared in bundles with a 3-inches minimum and a 6.5-inches maximum height.

e. It is recommended that the mailpieces within each bundle be randomized within the 5-digit FSS-scheme ZIP Code combinations or FSS sort plan schemes as defined by L006 (i.e. within bundles, randomly arrange pieces regardless of price category). Any piece prepared for a specific 5-digit scheme ZIP Code combination may be placed in the bundles of flats of uniform height.

f. “Leveling” (adjusting bundle heights within a presort destination to avoid overflow bundles) of the bundles within each mailpiece pool is encouraged.

g. Except for one overflow bundle that may be under the minimum size, all bundles within each mailpiece pool must be of uniform size.

h. Bundles must be placed on pallets to form layers of consistent thickness; and bundles of uneven thickness must be counter-stacked on pallets in accordance with 8.5.8.

i. Pallets must be prepared under 8.0 and labeled under 8.6, with a pallet placard bearing an Intelligent Mail container barcode as described in 708.6.4.

j. An FSS scheme pallet, or approved alternate container, must be made when 250 pounds or more of bundles are available for an individual FSS 5-digit scheme. Bundles remaining after palletization may be placed in sacks (or flat trays if approved).

k. Sacks containing flat-size pieces prepared to FSS zones must be labeled with Intelligent Mail tray labels under 708.6.3.

14.2 Periodicals

14.2.1 Basic Standards

[1-26-14] Except for Periodicals flats mailed at In-County prices, Periodicals flats mailings of 5,000 pieces or less mailed at Outside-County prices, or otherwise excepted Periodicals flats mailings, all Periodicals flats meeting the standards in 201.3.2 (nonmachinable flats up to 1-inch thick may be included if they meet the

standards in 705.14.1) and destinating to FSS zones as shown in L006, must be prepared according to these standards. Mailings of In-County Periodicals flats and Outside-County Periodicals flats mailings of 5,000 pieces or less also may be prepared according to these standards. Periodicals are subject to the following:

a. Pricing eligibility is based on 207.11.0 through 207.14.0, except that the 5-digit Outside-County bundle charge will be assessed to bundles of Outside-County Periodicals prepared in accordance with these standards, including bundles of flats claimed at the carrier route piece price. All Periodicals flats prepared under these standards will be assessed the 3-digit bundle price without regard to the piece prices claimed. FSS bundles placed on FSS scheme or FSS facility pallets, sacks or trays will claim the 3-digit bundle price.

b. FSS 5-digit scheme pallets will be assessed the Outside-County container charge for the 3-digit level pallet, except that there is no container charge for FSS 5-digit scheme pallets entered at a DFSS facility. FSS facility sort level pallets will be charged a container price for the SCF pallet. FSS scheme sacks or trays will continue to be assessed the 3-digit price. Sacks and trays entered at a DFSS will claim the DSCF entry price.

c. The Outside-County pound price will be the same as the DSCF price. The Inside-County price will claim prices for the “none” entry level.

d. Mailers must provide standardized presort documentation under 708.1.0 that demonstrates eligibility for 5-digit (scheme) or carrier route prices in accordance with 207.13.0, 207.14.0 and 207.25.0.

e. Mailers must combine all 5-digit, carrier route, and 5-digit scheme eligible flat-size mailpieces into a combined mailpiece pool for each FSS 5-digit scheme combination according to L006.

f. Each bundle must be identified with a “SCH 5-DIGIT FSS” optional endorsement line in accordance with Exhibit 708.7.1.1; or when authorized, using a red Label 5 SCH barcoded pressure-sensitive bundle label.

g. All pooled Periodicals mailpieces prepared on pallets to a single presort destination must be prepared in uniform size bundles, between 3 inches and 6.5 inches in height and secured under 203.3.0, except that one overflow bundle per mailpiece pool may be under the minimum size.

14.2.2 Pallet Preparation and Labeling

[1-26-14] Periodicals flats pieces prepared in 5-digit FSS scheme bundles must be placed on pallets in accordance with these standards. Residual bundles may be included with non-FSS bundles and placed directly on 3-digit, SCF, or ADC pallets in accordance with 8.10.2; or placed in sacks or approved alternate containers. Preparation sequence and labeling:

a. *FSS scheme*, required (optional under 250 pounds), no minimum, permitted only for FSS bundles prepared for a single FSS scheme, as shown in L006. Labeling:

   1. Line 1: L006, column B.

2. Line 2: “PER” or “NEWS,” as applicable; followed by “FLTS;” followed by “5D”; followed by “BARCODED” (or “BC”); followed by “FSS SCHEME” (or “FSS SCH”).

b. *FSS facility sort*, optional, no minimum, permitted only for FSS bundles prepared for the FSS sort plans processed within the same facility, as shown in L006. Labeling:

1. Line 1: “MXD” followed by information in L006, column C.
2. Line 2: “PER” or “NEWS,” as applicable; followed by “FLTS;” followed by “5D”; followed by “BARCODED” (or “BC”); followed by “FSS SCHEME” (or “FSS SCH”).

14.2.3 Sack Preparation and Labeling

[1-26-14] Properly prepared flat-size mailpieces in 5-digit FSS scheme bundles may be placed in sacks or approved alternate containers when 250 pounds are not available to a presort destination. 5-digit FSS scheme bundles may also be placed, or combined with non-FSS bundles and placed in 3-digit, SCF, ADC, or mixed ADC sacks or alternate containers. Preparation and labeling:

a. *FSS scheme*, required, permitted only for 5-digit FSS scheme bundles prepared for a single FSS scheme, as shown in L006; labeling:

1. Line 1: L006, column B.
2. Line 2: “PER FLTS 5D FSS SCH BC” or “NEWS FLTS 5D FSS SCH BC,” as applicable.

b. *FSS facility sort*, optional, permitted only for FSS bundles prepared for the FSS sort plans processed within the same facility, as shown in L006; labeling:

1. Line 1: L006, column C.
2. Line 2: Line 2: “PER FLTS 5D FSS SCH BC” or “NEWS FLTS 5D FSS SCH BC,” as applicable.

14.3 Standard Mail

14.3.1 Basic Standards

[1-26-14] All flat-size Standard Mail mailpieces may be combined in 5-digit FSS scheme bundles and placed on pallets, or in sacks or approved alternate containers, for delivery to ZIP Codes having Flats Sequencing System (FSS) processing capability, as shown in L006. Standard Mail flats are subject to the following:

a. Price eligibility is based on standards in 243.

b. Mailers must provide standardized presort documentation under 708.1.0 that demonstrates eligibility for 5-digit (scheme) or carrier route prices in accordance with 243.

c. Mailers must combine all 5-digit, basic carrier route, and 5-digit scheme eligible flat-size mailpieces into a combined mailpiece pool for each FSS 5-digit scheme combination according to L006.

d. Each bundle must be identified with a “SCH 5-DIGIT FSS” optional endorsement line in accordance with Exhibit 708.7.1.1; or when authorized, using a red Label 5 SCH barcoded pressure-sensitive bundle label.

e. All pooled mailpieces prepared to a single palletized presort destination must be prepared in uniform size bundles, between 3 inches and 6.5 inches in height and secured in accordance with 203.3.0, except that one overflow bundle per mailpiece pool may be under the minimum size.

14.3.2 Pallet Preparation and Labeling

[1-26-14] Standard Mail flats prepared in 5-digit FSS scheme bundles must be placed on pallets in accordance with these standards. Residual bundles may be included with non-FSS bundles and placed directly on 3-digit, SCF, ASF, or NDC pallets in accordance with 8.10.2; or placed in sacks or approved alternate containers. Preparation sequence and labeling:

a. *FSS scheme,* required (optional under 250 pounds), no minimum, permitted only for FSS bundles prepared for a single FSS scheme, as shown in L006. Labeling:

   1. Line 1: L006, column B.

   2. Line 2: “STD” followed by “FLTS;” followed by “5D”; followed by “BARCODED” (or “BC”); followed by “FSS SCHEME” (or “FSS SCH”).

b. *FSS facility sort*, optional, no minimum, permitted only for FSS bundles prepared for the FSS scheme processed within the same facility, as shown in L006. Labeling:

   1. Line 1: “MXD” followed by information in L006, column C.

   2. Line 2: “STD” followed by “FLTS;” followed by “5D”; followed by “BARCODED” (or “BC”); followed by “FSS SCHEME” (or “FSS SCH”).

14.3.3 Sack Preparation and Labeling

[1-26-14] Properly prepared flat-size mailpieces in 5-digit FSS scheme bundles may be placed in sacks or approved alternate containers when 250 pounds are not available to a presort destination. 5-digit FSS scheme bundles may be placed, or combined with non-FSS bundles and placed, in 3-digit, SCF, ADC, or mixed ADC sacks or alternate containers. Preparation and labeling:

a. *FSS scheme*, required, permitted only for 5-digit FSS scheme bundles prepared for a single FSS scheme, as shown in L006; labeling:

   1. Line 1: L006, column B.

   2. Line 2: “STD FLTS 5D FSS SCH BC.”

b. *FSS facility sort*, optional, permitted only for 5-digit FSS scheme bundles prepared for the FSS schemes processed within the same facility, as shown in L006; labeling:

   1. Line 1: L006, column C.

   2. Line 2: Line 2: “STD FLTS 5D FSS SCH BC.”

14.4 Bound Printed Matter

14.4.1 Basic Standards

[1-26-14] Bound Printed Matter (BPM) flats eligible for, and paid at, presorted prices or carrier route prices, and that meet the standards in 201.3.2, must be combined in 5-digit FSS scheme bundles and placed on pallets, or in flat trays, sacks or approved alternate containers, for delivery to ZIP Codes having FSS processing capability, as shown in L006. BPM flats are subject to the following:

a. Price eligibility for pricing purposes is based on standards in 263.

b. Mailers must provide standardized presort documentation under 708.1.0 that demonstrates eligibility for 5-digit (scheme) or carrier route prices in accordance with 263.

c. Mailers must combine all eligible flat-size mailpieces into a combined mailpiece pool for each FSS 5-digit scheme combination according to L006.

d. Each bundle must be identified with a “SCH 5-DIGIT FSS” optional endorsement line in accordance with Exhibit 708.7.1.1; or when authorized, using a red Label 5 SCH barcoded pressure-sensitive bundle label.

e. All pooled mailpieces prepared to a single palletized presort destination must be prepared in uniform size bundles, between 3 inches and 6.5 inches in height and secured in accordance with 203.3.0, except that one overflow bundle per mailpiece pool may be under the minimum size.

14.4.2 Pallet Preparation and Labeling

[1-26-14] Bound Printed Matter flats prepared in 5-digit FSS scheme bundles must be placed on pallets in accordance with these standards. Residual bundles may be included with non-FSS bundles and placed directly on 3-digit, SCF, ASF, or NDC pallets in accordance with 8.10.2; or placed in sacks or approved alternate containers. Preparation sequence and labeling:

a. *FSS scheme*, required (optional under 250 pounds), no minimum, permitted only for FSS bundles prepared for a single FSS scheme, as shown in L006. Labeling:

   1. Line 1: L006, (sort plan name) column B.

   2. Line 2: “PSVC FLTS;” followed by “5D”; followed by “BARCODED” (or “BC”); followed by “FSS SCHEME” (or “FSS SCH”).

b. *FSS facility sort*, optional, no minimum, permitted only for FSS bundles prepared for the FSS schemes processed within the same facility, as shown in L006. Labeling:

   1. Line 1: “MXD” followed by information in L006, Column C.

   2. Line 2: “PSVC FLTS;” followed by “5D”; followed by “BARCODED” (or “BC”); followed by “FSS SCHEME” (or “FSS SCH”).

14.4.3 Sack Preparation and Labeling

[1-26-14] Properly prepared flat-size mailpieces in 5-digit FSS scheme bundles may be placed in sacks or approved alternate containers when 250 pounds are not available to a presort destination. 5-digit FSS scheme bundles may be placed in

mixed NDC sacks or alternate containers, or combined with non-FSS bundles and placed in 3-digit, SCF, ADC, and mixed ADC sacks or alternate containers. Preparation and labeling:

a. FSS *scheme*, required, permitted only for 5-digit FSS scheme bundles prepared for a single FSS scheme, as shown in L006; labeling:

   1. Line 1: L006, column B.
   2. Line 2: "PSVC FLTS 5D FSS SCH BC."

b. *FSS facility sort*, optional, permitted only for 5-digit FSS scheme bundles prepared for the FSS schemes processed within the same facility, as shown in L006.

   1. Line 1: L006, column C.
   2. Line 2: Line 2: "PSVC FLTS 5D FSS SCH BC."

15.0 Combining Standard Mail Flats and Periodicals Flats

15.1 Basic Standards

Authorized mailers may combine Standard Mail flats and Periodicals flats in a single mailing as follows:

a. Each mailpiece must meet the standards in 240 for Standard Mail and 207 for Periodicals. Periodicals publications must be authorized or pending original or additional entry at the office of mailing.

b. Mailers must prepare pieces in bundles on pallets.

c. All mailpieces must be machinable in accordance with 201.3.0.

d. Mailers must pay all annual mailing fees at the office of mailing.

e. Each mailing must include at least 200 pieces or 50 pounds of Standard Mail.

f. All mailpieces combined within bundles, in accordance with 14.0, must be similar in size so as to create stable bundles. Bundles placed on pallets under this provision must be prepared to create stable pallets.

g. When residual pieces are included in a combined mailing of Standard Mail flats and Periodicals flats on pallets, these pieces must be bundled and placed directly on mixed NDC pallets.

15.1.1 Service Objectives

The Postal Service handles combined mailings of Standard Mail flats and Periodicals flats as Standard Mail. Periodicals flats included within mailings of combined Standard Mail flats and Periodicals flats are subject to the USPS service standards applicable to Standard Mail.

15.1.2 Postage Payment

Postage for all Standard Mail pieces must be paid with permit imprint using a special postage payment system in 2.0 through 4.0 at the Post Office location serving the mailer's plant. Postage for Periodicals may be paid through an advance deposit account or through a Centralized Account Processing System (CAPS) account.

15.1.3 Documentation

Mailers must present standardized electronic documentation according to 708.1.0. This documentation must accurately reflect the final piece count in the combined mailing. In addition, mailers must provide:

a. An edition or version summary for all pieces in the mailing. The summary may be part of the USPS qualification report and must include version ID, product or edition code, class of mail, piece weight of each version, and number of pieces by version; and for Periodicals, USPS or permit number (or pending permit number), issue date, and advertising percentage.

b. A consolidated postage statement register and postage statement for each Periodicals publication in the combined mailing.

c. A consolidated postage statement register and postage statement for each Standard Mail mailing in the combined mailing. Mailers may provide a single consolidated postage statement and a consolidated postage statement register of all Standard Mail mailings if they are itemized.

d. When pallets are dropshipped, a register of Forms 8125 (or PS 8125C) that consolidates all of the mailings into the destinations where the mail is dropshipped.

e. Documentation to support zones and bundle totals, if requested.

f. When requested, a copy of a notification document signed and dated by the Periodicals publisher, acknowledging their participation in a combined mailing of Standard Mail and Periodicals and the potential for their mailpieces to receive deferred USPS handling.

g. Any additional documentation to support postage payment system records, if requested.

15.1.4 Authorization

A mailer must submit a written request to the manager, Business Mailer Support (see 608.8.1 for address) to combine mailings of Standard Mail flats and Periodicals flats. The request must show the mailer's name and address, the mailing office, evidence of authorization to mail using a special postage payment system under 2.0 through 4.0, procedures for combining the mailing, the expected date of first mailing, quality control procedures, and a sample of all supporting mailing documentation, including postage statements and the USPS Qualification Report. Business Mailer Support will review the documentation and provide written authorization. A mailer may terminate an authorization at any time by written notice to the postmaster of the office serving the mailer's location. Business Mailer Support may terminate an authorization by written notice if the mailer does not meet the standards.

15.1.5 Price Eligibility

Apply prices based on the standards in 240 for Standard Mail. Prices are based on the standards in 207 for Periodicals and as modified under the standards for this program.

15.1.6 Piece Prices

Apply piece prices based on the bundle level. Pieces contained within mixed class bundles may claim prices based on the presort level of the bundle.

15.1.7 Applying the Periodicals Bundle Charge

Apply bundle charges as follows:

a. Calculate the percentage of Periodicals copies in a bundle.

b. Convert the percentage to four decimal places, rounding off if necessary (for example, convert 20.221% to 0.2022, or 20.226% to 0.2023). Multiply by the applicable bundle charge.

c. Allocate the resulting charge across the Periodicals titles and editions based on the number of copies of each in the bundle.

15.1.8 Applying the Periodicals Container Charge

Apply container charges to pallets as follows:

a. Calculate the percentage of the weight of Periodicals copies on each pallet.

b. Convert the percentage to four decimal places, rounding off if necessary (for example, convert 20.221% to 0.2022, or 20.226% to 0.2023). Multiply by the applicable container charge.

c. Allocate the resulting charge across the Periodicals titles and editions based on the number of copies of each on the pallet.

15.1.9 Other Periodicals Pricing

Other prices for Periodicals flats in a combined mailing of Standard Mail and Periodicals flats on pallets will be assessed as follows:

a. The bundle prices applicable to the ADC container level will be applied to the ASF/NDC container levels.

b. The container prices applicable to the ADC pallet level will apply to the ASF/NDC pallet levels.

c. The bundle price applicable to the ADC bundle placed on the ADC container level will apply to mixed ADC bundles placed on mixed NDC pallets.

d. The container price applicable to the mixed ADC pallet level will apply to the mixed ASF/NDC pallet level.

e. The bundle price applicable to the 5-digit bundle placed on the mixed ADC container level will apply to carrier route bundles placed on mixed NDC pallets.

15.1.10 Bundle Reallocation to Protect the SCF or NDC Pallet

Mailers may reallocate bundles under 8.11 or 8.13 to protect the SCF or NDC pallet.

15.1.11 Preparation for FSS Zones

[1-26-14] Mailers authorized to combine mailings of Standard Mail flats and Periodicals flats must prepare these mailings under 14.0, when the mailing includes pieces destinating within one or more of the FSS zones in L006. Mailpieces eligible for High Density and High-Density Plus prices are not required to, but may be, prepared under the standards in 14.0. The following applies:

a. Each mailpiece must be identified with a "SCH 5-DIGIT FSS MIX COMAIL" optional endorsement line (OEL), including the correct ZIP Code listed in L006, Column B, in accordance with Exhibit 708.7.1.1. The OEL described in 2.2 must not be used with mailpieces prepared under this option.

b. Pallets prepared to an individual FSS sort plan or to a FSS facility sort level must be prepared under 14.3.2, except that the contents line (line 2) must include the "STD/PER" description instead of the “STD” description, and must include “MIX COMAIL” as the final element of line 2.

c. All residual pallet levels must be prepared in accordance with 14.1f through 14.1j.

15.2 Combining Standard Mail Flats and Periodicals Flats in the Same Bundle

15.2.1 Bundling and Labeling

Standard Mail flats and Periodicals flats may be combined in carrier route, 5-digit (scheme), 3-digit, ADC, and Mixed ADC bundles when prepared according to 207.19.0 and these additional standards:

a. Each bundle containing combined Standard Mail flats and Periodicals flats must contain a minimum of 10 pieces. Bundles of only Standard Mail flats must contain a minimum of 10 pieces. Bundles of only Periodicals flats must contain a minimum of 6 pieces.

b. Firm bundles must contain only Periodicals flats.

15.2.2 Mailpiece and Bundle Identification

Each Standard Mail and Periodicals mailpiece prepared under a combined mailing of Standard Mail flats and Periodicals flats must be identified as being part of a mixed class mailing through the use of an optional endorsement line (OEL) in accordance with the standards in 708.7.1.8.

15.2.3 Pallet Presort and Labeling

Mailers must prepare pallets according to the standards in 8.0 and in the sequence listed below. Merged 5-digit scheme through NDC pallets must contain at least 250 pounds of combined Standard Mail and Periodicals mailpieces, except as allowed under 8.5.3. Pallets must be labeled according to the Line 1 and Line 2 information listed below and under 8.6. Pallet placards must be white and measure at least 8 inches by 11 inches, unless prepared under 708.6.4.6. Prepare pallets according to the preparation, sequence and labeling instructions in 15.4.1.

15.3 Combining Bundles of Standard Mail Flats and Periodicals Flats on the Same Pallet

15.3.1 Bundling and Labeling

Mailers must prepare bundles according to the standards for the class of mail and the prices claimed.

15.3.2 Mailpiece and Bundle Identification

Each Standard Mail and Periodicals mailpiece prepared under a combined mailing of Standard Mail flats and Periodicals flats must be identified as being part of a mixed class mailing through the use of an optional endorsement line (OEL) in accordance with standards in 708.7.1.8.

15.3.3 Pallet Presort and Labeling

Mailers must prepare pallets according to the standards in 8.0 and in the sequence listed below. Merged 5-digit scheme through NDC pallets must contain at least 250 pounds of combined Standard Mail and Periodicals, except as allowed under 8.5.3. When reallocating bundles under 8.11 or 8.12, mailers do not have to achieve the finest pallet presort level possible. Pallets must be labeled according to the Line 1 and Line 2 information listed below and under 8.6. Pallet placards must be white and measure at least 8 inches by 11 inches, unless prepared under 708.6.4.6. Prepare pallets according to the preparation, sequence and labeling instructions in 15.4.1.

15.4 Pallet Preparation

15.4.1 Pallet Preparation, Sequence and Labeling

When combining Standard Mail and Periodicals flats within the same bundle or combining bundles of Standard Mail flats and bundles of Periodicals flats on pallets, bundles must be placed on pallets. Preparation, sequence and labeling:

a. *Merged 5-digit scheme, optional*. Not permitted for bundles containing noncarrier route automation-compatible flats under 201.3.0. Required for all other bundles. Pallet must contain carrier route bundles and noncarrier route 5-digit bundles (Presorted bundles only) for the same 5-digit scheme under L001. For 5-digit destinations not part of L001, merged 5-digit pallet preparation begins with 15.4.1d. Labeling:

   1. Line 1: L001.
   2. Line 2: “STD/PER FLTS CR/5D;” followed by “SCHEME” (or “SCH”); followed by “MIX COMAIL.”

b. *5-digit scheme carrier routes, required*. Pallet must contain only carrier route bundles for the same 5-digit scheme under L001. For 5-digit destinations not part of L001, 5-digit carrier routes pallet preparation begins with 15.4.1c. Labeling:

   1. Line 1: L001.
   2. Line 2: “STD/PER FLTS”; followed by “CARRIER ROUTES” (or “CR-RTS”); followed by “SCHEME” (or “SCH”); followed by “MIX COMAIL.”

c. *Merged 5-digit, optional*. Not permitted for bundles containing noncarrier route automation-compatible flats under 201.3.0. Required for all other bundles. Pallet must contain carrier route bundles and noncarrier route 5-digit bundles (Presorted bundles only) for the same 5-digit ZIP Code. Labeling:

   1. Line 1: city, state, and 5-digit ZIP Code destination (see 8.6.4c for overseas military mail).
   2. Line 2: “STD/PER FLTS”; followed by “CR/5D”; followed by “MIX COMAIL.”

d. *5-digit carrier routes, required*. Pallet must contain only carrier route mail for the same 5-digit ZIP Code. Labeling:

   1. Line 1: city, state, and 5-digit ZIP Code destination (see 8.6.4c for overseas military mail).

2. Line 2: “STD/PER FLTS”; followed by “CR/5D”; followed by “MIX COMAIL.”

e. *5-digit, required*. Pallet must contain only mail for the same 5-digit ZIP Code or same 5-digit scheme under L007 (for automation flats only under 201.3.0). 5-digit scheme bundles are assigned to 5-digit pallets according to the OEL “label to” 5-digit ZIP Code. Labeling:

1. Line 1: city, state, and 5-digit ZIP Code destination (see 8.6.4c for overseas military mail).
2. Line 2: “STD/PER FLTS 5D”; followed by “BARCODED” (or “BC”); “NONBARCODED” (or “NBC”) for Presorted mail, or “BARCODED/NONBARCODED” (or “BC/NBC”) for pallets including both barcoded and Presorted pieces; followed by “MIX COMAIL.”

f. *3-digit, optional*, but not available for bundles for 3-digit ZIP Code prefixes marked “N” in L002. Pallet may contain mail for the same 3-digit ZIP Code or the same 3-digit scheme under L008 (for automation-compatible flats only under 201.3.0). Three-digit scheme bundles are assigned to pallets according to the OEL “label to” 3-digit ZIP Code in L008. Labeling:

1. Line 1: L002, Column A.
2. Line 2: “STD/PER FLTS 3D”; followed by “BARCODED” (or “BC”); “NONBARCODED” (or “NBC”) for Presorted mail, or “BARCODED/NONBARCODED” (or “BC/NBC”) for pallets including both barcoded and Presorted pieces; followed by “MIX COMAIL.”

g. *SCF, required*. Pallet may contain carrier route, automation or Presorted mail for the 3-digit ZIP Code groups in L005. Labeling:

1. Line 1: L002, Column C.
2. Line 2: “STD/PER FLTS SCF”; followed by “BARCODED” (or “BC”); “NONBARCODED” (or “NBC”) for Presorted mail, or “BARCODED/NONBARCODED” (or “BC/NBC”) for mixed pallets; followed by “MIX COMAIL.”

h. *ASF, required unless bundle reallocation used under* 15.1.10. Pallet may contain carrier route, automation or Presorted mail for the 3-digit ZIP Code groups in L602. ADC bundles are assigned to pallets according to the “label to” ZIP Code in L004 as appropriate. Labeling:

1. Line 1: L602.
2. Line 2: “STD/PER FLTS NDC”; followed by “BARCODED” (or “BC”); “NONBARCODED” (or “NBC”) for Presorted mail, or “BARCODED/NONBARCODED” (or “BC/NBC”) for mixed pallets; followed by “MIX COMAIL.”

i. *NDC, required*. Pallet may contain carrier route or automation mail for the 3-digit ZIP Code groups in L601. ADC bundles are assigned to pallets according to the “label to” ZIP Code in L004 as appropriate. Labeling:

1. Line 1: L601.

2. Line 2: “STD/PER FLTS NDC”; followed by “BARCODED” (or “BC”); “NONBARCODED” (or “NBC”) for Presorted mail, or “BARCODED/NONBARCODED” (or “BC/NBC”) for mixed pallets; followed by “MIX COMAIL.”

j. *Mixed NDC, required, no minimum*. Pallet may contain carrier route or automation mail. Pallet includes MXD ADC bundles, prepared according to the “label to” ZIP in L009, as appropriate. Unless authorized by the processing and distribution manager, pallet must be entered at the NDC serving the 3-digit ZIP Code of the entry Post Office. Labeling:

1. Line 1: “MXD” followed by the information in L601, for the NDC serving the 3-digit ZIP Code prefix of the entry Post Office.
2. Line 2: “STD/PER FLTS;” followed by “BARCODED” (or “BC”); “NONBARCODED” (or “NBC”) for Presorted mail, or “BARCODED/NONBARCODED” (or “BC/NBC”) for mixed pallets; followed by “WKG;” followed by “MIX COMAIL.”

16.0 Plant Load Mailings

16.1 Basic Information

16.1.1 Purpose

In a plant load operation, the USPS receives mail at a mailer’s plant and transports it to bypass handling otherwise required at one or more postal facilities. Plant loads are authorized if they benefit the USPS. The USPS selects the appropriate mode of transportation and determines responsibility as shown below.

TYPE	WHO ARRANGES, PAYS TRANSPORT	RESPONSIBILITY	POSTAGE PAID FROM	ADDITIONAL FORMS[1]
Collection[2]	USPS	USPS	Affixed/Mailer Plant	None
Pickup[3]	USPS with fee	USPS	Affixed/Mailer Plant	Form 5541
Drop Shipment[4]	Mailer/USPS	USPS	Acceptance Post Office	None
Drop Shipment Metered Mail	Mailer	Mailer	Post Office of License	None/ Endorsement
Business Mail Entry Unit (BMEU)	Mailer	Mailer	BMEU Post Office	None
Destination Entry (drop shipment)	Mailer	Mailer	Entry Office	Form 8125

TYPE	WHO ARRANGES, PAYS TRANSPORT	RESPONSIBILITY	POSTAGE PAID FROM	ADDITIONAL FORMS[1]
Periodicals Additional Entry	Mailer	Mailer	Entry Office	Form 3510
Periodicals Exceptional Dispatch	Mailer	Mailer	Entry Office	Statements
Periodicals Airport Mail Facility	Mailer	Mailer	Entry Office	Form 3510
Plant Load	USPS	USPS	Mailer Plant	None
Expedited Plant Load Shipment	Mailer	Mailer	Mailer Plant	Form 8017

1. Postage statements and other appropriate mailing documentation forms are required.
2. Collection applies to mail that is part of an approved collection service and may include Presorted First-Class Mail and all automation price mail. It generally does not apply to mailings at bulk prices.
3. Priority Mail Express, Priority Mail, and scheduled Standard Post only.
4. Priority Mail Express or Priority Mail service to expedite other class. Only at designated postal facilities; mailers must submit/present shipment to acceptance unit designated by postmaster (mailer transportation). USPS transports by Priority Mail Express or Priority Mail from origin Post Office to destination Post Office of the shipment. If authorized, the shipment is accepted at mailer plant acceptance unit and transported from mailer plant with other mail on USPS transportation.

16.1.2 Service Objectives

The service objectives for the class of mail transported apply to the plant-loaded mail. Plant-loaded mail may have deferred service objectives if provided in the plant load agreement.

16.1.3 Service Not Provided

The USPS does not hold, store, or delay the dispatch of plant-loaded mail released to the USPS, except under the plant load agreement with the mailer. The USPS does not relocate trailers on the mailer's premises.

16.2 Application for Plant Load Privileges

16.2.1 Application

To have mail plant-loaded, the mailer must complete Form 3815 and submit it to the postmaster of the Post Office serving the mailer's plant.

16.2.2 Approval

Generally, a plant load application is approved if transportation is available and cost savings to the USPS are shown. If the application is approved, the mailer must enter into a plant load agreement with the USPS.

16.2.3 Denial and Appeal

If the application is denied, the mailer may appeal through the local postmaster within 10 calendar days of the mailer's receipt of the denial notice to the vice president of area operations for the area in which the mailer's plant is located, giving the reasons why the application should be approved.

16.3 Plant Load Operations

16.3.1 Mixed Mail Classes

A mailer may combine Periodicals, Standard Mail, Parcel Select, and Package Services in a single vehicle if the mailings are physically separated, a postage statement is submitted for each mailing, and the service standards are met for each class of mail combined in the vehicle or trailer.

16.3.2 Compliance

The mailer must meet all relevant mailing standards and the terms of the plant load agreement. Destination loads must be prepared under 16.5 through 16.7 and as specified by the postmaster administering the plant load.

16.3.3 Reimbursement by Mailer

Under the plant load privileges and the terms of the plant load agreement, the mailer must reimburse the USPS for services it furnished while providing plant load service, including:

a. Detention charges when trailers furnished by the USPS are held up for some action or inaction of the mailer.

b. Costs for bobtailing, deadheading, or waiting/holding, if such charges are incurred by the USPS to provide plant load service for some action or inaction of the mailer.

16.4 Expedited Plant Load Shipment

16.4.1 Definition

Under an expedited plant load shipment authorization, the USPS verifies and receives postage payment for mailable matter at the mailer's plant, after which the mailer transports the shipment (at the mailer's expense) to a destination postal facility.

16.4.2 Authorization

Only an authorized plant load mailer may prepare and transport expedited plant load shipments. Authorization is by written request to the postal official who authorized the plant load. The request must state, for each destination to which mail is to be transported, the material to be deposited as an expedited plant load shipment (e.g., the class, characteristics, and quantity), the frequency of mailing, and whether the request is for one or for a series of mailings. The mailer must meet all conditions in the authorization, if approved.

16.4.3 Liability

The mailer assumes all liability and responsibility for any loss or damage to the shipment before it is deposited in and accepted at a postal facility, whether or not a third party is used to transport the shipment. The USPS is not liable or responsible for any loss of or damage to an expedited plant load shipment before it is deposited in and accepted at a postal facility.

16.4.4 Postage Refund

The USPS does not refund postage for any failure to provide service caused in whole or in part by any event that occurs before the shipment is deposited in and accepted at a postal facility, except under the applicable standards for refunds.

16.5 Mailer Responsibilities

16.5.1 General

The plant load mailer must meet the terms of the plant load agreement and the standards that apply to the class of mail prepared, prices claimed, and method of paying postage used.

16.5.2 Verification at USPS Facility

If mail verification does not occur at the mailer's plant, the mailer must:

a. Keep a plant load control log with a copy of each postage statement, numbered sequentially; the number of each vehicle used to transport plant-loaded mail; and the name of the postal facility where verification is to occur.

b. Not shrinkwrap or otherwise secure the mail to inhibit verification.

c. Correct preparation errors found in the mail when verified or pay additional postage at the price for which it qualifies.

16.5.3 Postage

Unless otherwise permitted by standard, the mailer must pay all applicable postage and fees to the origin Post Office before a plant-loaded mailing is dispatched.

16.6 Intradistrict Plant-Loaded Shipments

Intradistrict plant-loaded shipments must fill 50% or more of a vehicle by weight or cube (a minimum of 23,000 pounds or 1,600 cubic feet).

16.7 Interdistrict Plant-Loaded Shipments

16.7.1 One Mailing

The mailer must prepare interdistrict plant-loaded vehicles containing one mailing under 16.7.2 through 16.7.4 as appropriate to the class of mail.

16.7.2 First-Class Mail

For plant-loaded shipments of First-Class Mail:

a. If there is enough mail for the same SCF service area to fill 60% or more of a vehicle by weight or by cube (a minimum of 28,000 pounds or 2,000 cubic feet), the mailer must prepare a direct vehicle for that SCF.

b. After making up all possible SCF vehicles, if there is enough mail for the same ADC service area to fill 60% or more of a vehicle by weight or by cube, the mailer must prepare a direct vehicle for that ADC.

16.7.3 Periodicals

For plant-loaded shipments of Periodicals:

a. If there is enough mail for the same SCF service area to fill 60% or more of a vehicle by weight or by cube, the mailer must prepare a direct vehicle for that SCF.

b. After making up all possible SCF vehicles, if there is enough mail for the same ADC service area to fill 60% or more of a vehicle by weight or by cube, the mailer must prepare a direct vehicle for that ADC.

c. After making up all possible SCF and ADC vehicles, if there is enough mail for the same transfer hub service area to fill 60% or more of a vehicle by weight or by cube, the mailer must prepare a direct vehicle for that transfer hub.

16.7.4 Standard Mail, Parcel Select, and Package Services

For plant-loaded shipments of Standard Mail, Parcel Select, and Package Services:

a. If there is enough mail for the same SCF service area to fill 60% or more of a vehicle by weight or by cube (a minimum of 28,000 pounds or 2,000 cubic feet), the mailer must prepare a direct vehicle for that SCF.

b. After making up all possible SCF vehicles, if there is enough mail for the same ASF or NDC service area to fill 60% or more of a vehicle by weight or by cube, the mailer must prepare a direct vehicle for that NDC or ASF.

16.7.5 Two or More Mailings

The mailer must prepare interdistrict plant-loaded vehicles containing two or more mailings under 16.7.6 and 16.7.7 as appropriate to the class of mail.

16.7.6 Insufficient Volume

Two or more mailings that independently have insufficient volume to require direct destination vehicles to be prepared may be combined to make up an origin vehicle without meeting the standards in 16.7.7.

16.7.7 Sufficient Volume

Two or more mailings, which independently have sufficient volume to require destination vehicles to be prepared, must meet these standards when combined:

a. For First-Class Mail, if there is enough mail for the same ADC service area to fill 60% or more of a vehicle by weight or by cube, the mailer must prepare a direct vehicle for the ADC.

b. For Periodicals, if there is enough mail for the service area of the same transfer hub to fill 60% or more of a vehicle by weight or by cube, the mailer must prepare a direct vehicle for that transfer hub.

c. For Standard Mail, Parcel Select, and Package Services, if there is enough mail for the same ASF or NDC service area to fill 60% or more of a vehicle by weight or by cube, the mailer must prepare a direct vehicle for that ASF or NDC.

16.7.8 Destination

The preparation standards for plant-loaded vehicles are determined by the destination of the mailings accepted by the USPS at the mailer's plant.

16.7.9 Two Options

If a plant-loaded mailing does not meet the preparation standards for plant-loaded vehicles under 16.7.1 through 16.7.8, the mailer has two options:

a. Rework the mailing so that it meets the applicable standard. If the mailing is verified and accepted as mail by the USPS at the mailer's plant and then it is determined that the vehicle preparation standards are not met, the mailer must rework the mailing.

b. Transport the mailing at the mailer's expense to a postal facility within the origin service area designated by the origin postmaster and with the capability to process that class of mail. If this option is chosen, all applicable postage statements must be provided with the mailings.

17.0 Plant-Verified Drop Shipment

17.1 Description

17.1.1 Purpose

Plant-verified drop shipment (PVDS) enables origin verification and postage payment for shipments transported by a mailer (or third party) at the mailer's expense, on the mailer's own or contracted vehicle, to destination USPS facilities for acceptance as mail. The mailings may be prepared for deposit at a destination entry price, or they may be claimed at the applicable prices from the destination entry facility.

17.1.2 Function

Under PVDS:

a. Mailings are verified at origin by USPS employees assigned to a detached mail unit (DMU) at a mailer's plant or at the business mail entry unit (BMEU) at the origin Post Office serving the mailer's plant. The shipments are then released for transportation to destination USPS facilities.

b. For Periodicals, postage is paid at a valid original entry or additional entry Post Office serving the mailer's plant, unless an alternative postage payment method is authorized.

c. For Standard Mail, Parcel Select, and Package Services, postage and fees are paid under a valid permit at the Post Office serving the mailer's plant, or as designated by the district manager.

d. The shipment is deposited at the destination USPS facility, by the mailer or the mailer's agent, where it is verified and accepted as mail by USPS employees and released for processing.

17.1.3 Other Mailings

The following mailings must be verified, accepted, and paid for at the destination USPS facility:

a. Periodicals mailings not verified at origin under PVDS or under the Centralized Postage Payment System (see 207.16.0 and 207.17.0). The destination USPS facility must be a valid original entry or additional entry Post Office if mailings are submitted there for postal verification.

b. Standard Mail, Parcel Select, and Package Services mailings not verified and paid for at origin under PVDS. Mailers must have a valid permit at the destination USPS facility for postage payment.

17.1.4 Dates

The postage statement may be submitted before or at the time a shipment is presented to the origin Post Office DMU or BMEU. The date shown by the mailer and the Post Office round stamp date on the postage statement and Form 8125 represents the date the origin Post Office DMU or BMEU verified the shipment and cleared it for dispatch by the mailer to the destination USPS facility. It does not necessarily represent the date the USPS accepts the PVDS at the USPS destination facility as mail.

17.1.5 Postage Refund

The USPS does not refund postage for any failure to provide service caused by any event that occurs before the shipment is deposited and accepted into the mailstream and becomes mail at a destination postal facility, except under 604.9.0.

17.2 Program Participation

17.2.1 Mailer Responsibility

A mailer participating in PVDS must comply with 17.0. If the mailer does not meet these requirements, the mailer may be prohibited from participating in PVDS by the local postmaster. Any mailer denied a request for PVDS may file an appeal under 607.2.0.

17.2.2 Verification at Mailer's Plant

Before PVDS verification can be performed at the mailer's plant, the mailer must have either a USPS plant load authorization for that plant or a special postage payment authorization (or agreement) with the USPS that establishes a detached mail unit (DMU) at that plant. The DMU must be separate from the mailer's activities, in an enclosed, secure, and safe work area with a telephone. The work area must be approved by the USPS. The mailer may submit a letter to the postmaster serving the plant and request PVDS verification at the plant. The postmaster may agree to the mailer's request to verify PVDS shipments at the plant on an as-needed basis, if an approved DMU is established and staffing can be accommodated.

17.2.3 Verification at Origin BMEU

PVDS verification can be performed at the origin business mail entry unit (BMEU) under these conditions:

a. There is no detached mail unit (DMU) at the mailer's plant.

b. The mailer is in the service area of the Post Office where the PVDS is to be verified and where postage is to be paid, unless another postal facility is designated by the district manager.

c. Each vehicle contains only one mailer's shipment(s), each physically separated.

d. A completed postage statement and Form 8125 accompanies each PVDS (or segment, if the PVDS is contained in more than one vehicle).

e. If an alternate method of paying postage with permit imprint is used, in addition to 17.2.3d, (additional) required documentation must accompany each PVDS (or segment, if the PVDS is contained in more than one vehicle).

f. The PVDS can be physically verified at the origin BMEU. Shipments to be verified may not be wrapped or otherwise prepared if a presort and postage verification cannot be performed without destroying the physical integrity of the shipment.

g. The BMEU has enough space and staff to handle verification, and scales to calculate per piece and gross weights are available. If the Post Office serving the mailer's plant lacks resources, another postal facility may be designated by the district manager.

h. The mailer must transport all shipments to the Post Office, unload them for verification. When cleared for dispatch, reload the shipments back onto the mailer's vehicle for transportation to the destination USPS facility.

17.2.4 Periodicals

Periodicals postage must be paid at the Post Office verifying the copies or as designated by the district. Postage is calculated from the destination USPS facility where the mail is deposited and accepted (or from the facility where the Priority Mail Express or Priority Mail Open and Distribute destinates). The publisher must ensure that sufficient funds are on deposit to pay for all mailings before their release. A publisher authorized under an alternative postage payment system must pay postage under the corresponding standards.

17.2.5 Standard Mail, Parcel Select, and Package Services

The mailer must pay any applicable permit fees, mailing fees, and postage for Standard Mail, Parcel Select, and Package Services PVDS at either the Post Office serving the mailer's plant or the Post Office that does BMEU verification as designated by the district. If permit imprints are used to pay postage, the mailer must ensure that sufficient funds are on deposit to pay for all shipments before their release. For Nonprofit Standard Mail prices, a valid authorization must be on file at the Post Office where postage is paid. No permit, fees, or authorizations are required at the destination USPS facility where PVDS mailings are deposited.

17.2.6 Postage Statement—Periodicals

The mailer must submit a Form 3541 for each edition of each issue of each publication prepared for deposit at each destination USPS facility when the corresponding copies are presented to the DMU or the Post Office BMEU for verification. When required by the USPS, the mailer must submit consolidated postage statements and a postage statement register.

17.2.7 Postage Statement—Standard Mail

At the time mail is presented for verification, the mailer must submit an appropriate Form 3602 representing all the pieces from the mailing job and Form 3602-C (or postage statement register) for all PVDS verified at the mailer's DMU or the Post Office BMEU. The mailer must enter the required information on Form 3602-C for each PVDS to be deposited at each destination USPS facility, in lieu of providing a separate Form 3602 for each PVDS.

17.2.8 Postage Statement—Parcel Select and Package Services

At the time mail is presented for verification, the mailer must submit an appropriate postage statement for each PVDS mailing destined for each destination USPS facility. When required by the USPS, the mailer must submit consolidated postage statements and a postage statement register.

17.2.9 Form 8125 and Form 8125-C

Form 8125 is used to report a single PVDS that the mailer will transport from origin to a destination USPS facility. Computer-generated Form 8125-C (format available at www.usps.com) provides for reporting multiple PVDS mailings that are prepared by an individual mailer and that are cleared at origin on the same day for entry at a single destination USPS facility on the same vehicle (see 17.2.11). The mailer must submit a completed Form 8125 (signed and dated by the DMU or BMEU) for each

PVDS to the destination USPS facility. The form must be submitted in duplicate, or in triplicate if the mailer desires a signed and dated copy returned to its representative when depositing the mail at the destination USPS facility. Form 8125 is not required for PVDS sent via Priority Mail Express or Priority Mail Open and Distribute under 18.0.

17.2.10 Facsimile Forms 8125 and 8125-C

Facsimile Forms 8125 may be used in lieu of the USPS form. Formats must be approved in advance by the district manager of Business Mail Entry or designee. Formats must include all required information, including the correct title (preceded by the word "facsimile") and edition date, in locations as close as possible to where they appear on the USPS form. Data fields that do not pertain to information relating to the PVDS, and other extraneous information that appears on the USPS form, do not have to be included. Form 8125-C must always be computer-generated. Form 8125-C may omit the "Number of Pieces" and "Piece Weight" columns for mailings prepared in sacks, trays, or on pallets if there is sufficient information for the origin Post Office and destination USPS facility to identify the mailings and to compare the information on the form with the physical mail. The mailer must report the number of pieces in each mailing on Form 8125-C if the mailings consist of individual mailpieces that are not prepared in containers (e.g., bedloaded parcels). For mailings consisting of identical-weight pieces, mailers should report the piece weight where possible.

17.2.11 Mailer Transport of PVDS

Using any means of transportation, including Priority Mail Express or Priority Mail Open and Distribute shipment, the mailer must transport PVDS mailings from origin to the destination USPS facility. The mailer must not transport PVDS mailings on the same vehicle with shipments not entered as PVDS. For Standard Mail, Parcel Select, and Package Services PVDS, the mailer must meet the scheduling standards for mail deposit at destination USPS facilities. If a vehicle contains mail paid at Parcel Select destination entry prices, the applicable standards for scheduling of deposits and unloading of vehicles apply to any other mail on the same vehicle for the same destination USPS facility. Any material classified as hazardous under 601.9.0 may not be carried in the same vehicle as PVDS mailings.

17.2.12 Separation of PVDS Mailings

When a vehicle contains more than one PVDS for a single destination USPS facility, the shipments must be separated to allow reconciliation with each accompanying Form 8125. Vehicles containing shipments for multiple destination USPS facilities must be kept physically separated. Where applicable, a single Form 8125 that identifies all the mail for a single facility must be prepared for a shipment of copalletized or combined mailings.

17.2.13 PVDS Seal

The mailer may ask that a PVDS band seal secure the vehicle containing verified mailings before dispatch to the destination facility.

17.2.14 Form 8125—Segregation and Nonpostal Documentation

PS Forms 8125 must be segregated from all other nonpostal documentation and presented separately to USPS personnel at the time of induction. Nonpostal proof-of-delivery documents such as delivery receipts or bills of lading presented by

a mailer's transportation provider [carrier] are not substitutes for PS Forms 8125. USPS personnel may, upon request, sign such documents when presented by carriers. A PS Form 8125 signed by a postal employee (or electronic equivalent file in the Electronic Verification System (eVS)) serves as the sole evidence of the transfer of the custody of pieces entered as a mailing at the time of induction. The Postal Service does not consider a proof-of-delivery document such as a delivery receipt or a bill of lading furnished by a USPS customer's carrier as proof of mailing, acceptance, or the amount of mail tendered. Any signature by a postal employee or agent on any nonpostal form does not serve any mail acceptance purpose. If an inconsistency between the information on a PS Form 8125 and a carrier- or mailer-provided document designed to evidence the transfer of custody of pieces entered as a mailing at the time of induction exists, the information on PS Form 8125 prevails insofar as the USPS is concerned.

17.3 Liability

The mailer assumes all responsibility and liability for any loss or damage to PVDS mailings before they are deposited and accepted as mail at destination USPS facilities, including third party transportation.

17.4 Standard Mail Documentation

17.4.1 Same Day

All mailings or segments of the same job submitted for verification and release on the same day under PVDS must be reported on a single postage statement and Form 3602-C (or postage statement register).

17.4.2 Documentation

In addition to the documentation required in 708.1.0, the mailer must also submit the documentation below at the time the first mailing identified on Form 3602-C is presented for verification:

a. Form 3602-C, which serves as the postage statement register, along with the appropriate postage statement. All mailing volumes, weights, and postage for each price category are entered on the postage statement and used to debit the mailer’s account for permit imprint mailings and to enter data on postage-affixed mailings.

b. A separate Form 8125 for each PVDS listed on Form 3602-C (or postage statement register). Each PVDS must be identified with a unique statement number (e.g., the date and a sequential three-digit suffix) on the Form 3602-C (or postage statement register) and the corresponding Form 8125, as appropriate.

c. A separate postage statement showing the mailing Post Office is the same as the Post Office of PVDS origin for any portion of a job accepted by the local verifying office under a standard plant load arrangement. Plant load mailings are not considered a PVDS and are not reported on Forms 3602-C and 8125.

17.5 Parcel Select and Package Services PVDS Option

17.5.1 General Standards

Under this option, in addition to the individual postage statements required for each Parcel Select or Package Services mailing, the mailer may be required to submit postage statement registers and consolidated postage statements for PVDS mailings. A single, unique USPS mailing number must be on all related individual postage statements and postage statement register listing these individual statements, and the associated consolidated postage statement. When a mailer is required to submit consolidated postage statements, the information on these statements is used to debit the mailer's account.

17.5.2 Individual Postage Statements

The mailer must submit a complete postage statement for each mailing for each destination USPS facility when the mailing is presented for verification and postage payment. In addition to the information required on all individual postage statements, if the mailer is required to submit consolidated postage statements (for three or more entry Post Offices) for debiting of the advance deposit account, each individual postage statement must include a uniquely assigned postage statement sequence number that must not exceed nine digits. The numbers must be sequential within a job or mailing cycle for mailings verified, paid for, and cleared for dispatch on the same day. The statements must also include a unique USPS mailing number corresponding to the number on the related postage statement register and consolidated postage statement.

17.5.3 Postage Statement Register

A postage statement register is a computer-generated line item listing of all individual postage statements for PVDS permit imprint mailings verified and released for dispatch on a single day from a job or mailing cycle. All postage statements listed on a postage statement register must be represented by a corresponding consolidated postage statement. The total postage charge on the postage statement register must be identical to the total postage charge on the corresponding consolidated statement. The following information must appear on each postage statement register:

a. At the top of the first page the endorsement "Register of Postage Statements"; name and location of the mailing agent; date mailings are verified and cleared for dispatch; the permit imprint number; the unique USPS mailing number corresponding to the number on related postage statements; and the related consolidated statement.

b. Each line item must include (based on the individual postage statement on that line) the unique postage statement sequence number; destination USPS facility; and, for that statement, total postage, weight, and number of pieces.

c. The sum of the total postage charges must appear with total weight, and total pieces must be listed from each postage statement. The total postage charge on the register must match total postage charge on the related consolidated statement.

d. If necessary, manual corrections may be made to the postage statement register listing the data from any revised individual statement. These corrections must be documented by the DMU, and the corrected register must be signed

and dated by both the mailer and the USPS representative approving the changes. The changes on the register must be reflected on the associated consolidated postage statement.

17.5.4 Submitting Register

The mailer must submit the postage statement register to the DMU before or when presenting the first individual mailing on the register to the DMU for verification and dispatch.

17.5.5 Consolidated Postage Statement

The consolidated postage statement assembles data from the individual postage statements representing permit imprint mailings verified, paid for, and released for dispatch on a single day from a job or mailing cycle. The consolidated postage statement must be a computer-generated facsimile similar in format to the appropriate USPS postage statement. The mailer must sign and date the consolidated statement. Certain data elements not on the individual postage statements must be reflected on the consolidated statement, including the range of unique individual statement sequence numbers, the number of individual statements represented, and the endorsement "Consolidated Postage Statement." Other data elements on individual statements, such as each Post Office of deposit for PVDS mailings, are not shown on the consolidated statement. Each individual statement must contain a USPS mailing number that corresponds to the USPS mailing number on the related consolidated statement. The consolidated statements are used to debit the mailer's account. The following information must be identical for each individual statement consolidated onto a single (consolidated) postage statement:

a. Mailing date.

b. Name and location of mailing agent.

c. Processing category.

d. Permit imprint number.

e. Job or mailing cycle description.

f. Unique USPS mailing number corresponding to the number on related individual postage statements.

17.5.6 Calculating and Reporting Data

Each field on the consolidated postage statement represents the sum of the figures in that field from the individual postage statements. The figures reported on the consolidated statement must be rounded in accordance with 604.7.1.3. All fields containing data on the individual statements must be rolled up to the consolidated statement. The total postage on the consolidated statement must be the sum of the total postage for all individual postage statements. This total is used to debit the mailer's account.

17.5.7 Submitting Statement

The mailer must submit the consolidated postage statement to the DMU at or before the time the last individual postage statement it represents is submitted to the DMU for the day's mailing.

18.0 Priority Mail Express Open and Distribute and Priority Mail Open and Distribute

18.1 Prices and Fees

18.1.1 Basis of Price

[1-26-14] The basis of price for Priority Mail Express and Priority Mail Open and Distribute is as follows:

a. Priority Mail Express postage is based on the zone and weight of the contents of the Open and Distribute shipment. The maximum weight for each container is 70 pounds.

b. Priority Mail commercial plus tray box postage is based on the tray box and zone. The maximum weight for each container is 70 pounds.

c. Except as provided above, Priority Mail postage is based on the zone and weight of the contents of the Open and Distribute shipment. Do not include the tare weight of the external container. Do not apply Priority Mail dimensional weight pricing or Periodicals container prices to the external container. The minimum weight requirement for Open and Distribute sacks is 5 pounds, except for Open and Distribute sacks that contain qualified trays (trays prepared under the standards for the applicable class of mail). The maximum weight for each container is 70 pounds.

18.1.2 Zone Prices

Compute zone prices, for the applicable class of mail, from the accepting Post Office to the destination facility for the container (not the destination Post Office for the enclosed mail).

18.1.3 Enclosed Mail

The mail enclosed in a Priority Mail Express or Priority Mail Open and Distribute container must be either entirely single-piece price matter or entirely presorted matter that is part of the same mailing.

18.1.4 Calculating Payment for Enclosed Mail

Mailers must prepay postage and fees for the enclosed mail under the applicable standards. When the enclosed mail is zone-priced, the zone is computed from the postal facility where the Priority Mail Express Open and Distribute or Priority Mail Open and Distribute container destinates.

18.1.5 Payment Method

Postage payment methods are as follows:

a. Postage on the enclosed mail may be paid by any method permitted for that mail class, except for ordinary postage stamps requiring cancellation.

b. Priority Mail Express postage may be paid under any of the options listed in 214.1.1, except Click-N-Ship. Priority Mail Express postage must be affixed to the applicable tag in 18.5.3a, to the Open and Distribute tray box, or part of the address label.

c. Priority Mail postage may be paid under any of the options listed in 224.1.1, except Click-N-Ship. Priority Mail postage must be affixed to or hand-stamped on the applicable tag in 18.5.3b, the Open and Distribute tray box, or part of the address label.

18.1.6 Postage Statement for Enclosed Mail

The mailer must provide the correct postage statement for the enclosed mail unless prepared under the Electronic Verification System (eVS). If the enclosed mail is zone-priced, the mailer must either provide documentation that details the pieces and postage, by zone for each Priority Mail Express Open and Distribute or Priority Mail Open and Distribute shipment destination, or provide a separate postage statement for each Priority Mail Express Open and Distribute or Priority Mail Open and Distribute shipment destination. The mailer must always present the mailing to the designated USPS acceptance unit for verification of postage and fees. A postage statement is not required for the Priority Mail Express or Priority Mail portion of the Open and Distribute shipment, unless Priority Mail postage is paid by permit imprint not prepared under eVS.

18.1.7 Authorization

No authorization is required for Priority Mail Express Open and Distribute or Priority Mail Open and Distribute. The mailer must pay all applicable fees, obtain necessary authorizations for the enclosed mail, and pay postage at the Post Office where the Priority Mail Express Open and Distribute or Priority Mail Open and Distribute shipment is mailed.

18.2 Basic Standards

18.2.1 Description of Priority Mail Express Open and Distribute and Priority Mail Open and Distribute

Priority Mail Express Open and Distribute and Priority Mail Open and Distribute provide alternatives for mailers who want to expedite mailings of other classes of mail to destination postal facilities, including as a means of eligibility for destination entry prices for the applicable classes and shapes of mail. Mailers prepare the mailings according to standards for the enclosed class of mail, enclose the mail in containers for expedited service as either Priority Mail Express Open and Distribute or Priority Mail Open and Distribute, and present the mailings to a postal acceptance unit by the critical entry time for USPS shipment under 18.0. Mailers may use Priority Mail Express Open and Distribute or Priority Mail Open and Distribute for all or part of their mailings.

18.2.2 Content Standards

The Priority Mail Express or Priority Mail shipment and the enclosed mail must meet all corresponding eligibility and preparation standards (see 210 for Priority Mail Express standards and 220 for Priority Mail standards). For mail enclosed in a Priority Mail Express Open and Distribute container, available extra services are indicated in 18.3.2. For mail enclosed in a Priority Mail Open and Distribute container, available extra services are indicated in 18.4.2. Mailpieces requiring cancellation may not be included in a Priority Mail Express Open and Distribute or a Priority Mail Open and Distribute shipment. Mailers are not required to place

bundles of mail in sacks or trays when all of the mail enclosed in an Open and Distribute sack is destined to a 5-digit facility and the Open and Distribute sack weighs at least five pounds.

18.3 Additional Standards for Priority Mail Express Open and Distribute

18.3.1 Service Objectives

The Priority Mail Express service guarantee for Priority Mail Express Open and Distribute is receipt by end of day (11:59 p.m.) and ends upon receipt by scan of the Priority Mail Express Open and Distribute container at the destination postal facility. The service guarantee does not apply to the delivery of the enclosed mail to the addressees.

18.3.2 Extra Services

No extra services may be added to the Priority Mail Express segment of a Priority Mail Express Open and Distribute shipment, and the enclosed mail may receive only the following extra services:

a. First-Class Mail pieces may be sent with Certified Mail service or special handling or, for parcels only, USPS Tracking or Signature Confirmation service.

b. Priority Mail pieces may be sent with Certified Mail service, special handling, USPS Tracking, or Signature Confirmation service.

c. Standard Mail parcels (except Customized MarketMail pieces) may be sent with electronic option USPS Tracking service.

d. Parcel Select, Standard Post and Package Services mail may be sent with special handling or, for parcels only, USPS Tracking or Signature Confirmation service.

18.4 Additional Standards for Priority Mail Open and Distribute

18.4.1 Service Objectives

All Priority Mail Open and Distribute containers receive expeditious handling and transportation. The USPS follows uniform guidelines for delivering the containers to a destination postal facility but does not guarantee delivery within a specified time.

18.4.2 Extra Services

No extra services are available for Priority Mail Open and Distribute containers. The mail enclosed in the container may receive only the following services:

a. First-Class Mail pieces may be sent with Certified Mail service or special handling or, for parcels only, USPS Tracking or Signature Confirmation service.

b. Standard Mail parcels and NFMs (except Customized *MarketMail* pieces) may be sent with electronic option USPS Tracking service.

c. Parcel Select and Package Services mail may be sent with special handling or, for parcels only, USPS Tracking or Signature Confirmation service.

18.5 Preparation

18.5.1 Containers for Expedited Transport

Acceptable containers for expedited transport are as follows:

a. A Priority Mail Express Open and Distribute shipment must be contained in a USPS-approved sack using the applicable tag in 18.5.3a or in a USPS-provided Priority Mail Express Open and Distribute tray box (Tags are not required for tray boxes; only the 4x6 address label should be applied), except as provided in 18.5.1c and 18.5.1d.

b. A Priority Mail Open and Distribute shipment must be contained in either a USPS-approved sack using the applicable tag in 18.5.3b or a USPS-provided Priority Mail Open and Distribute tray box (Tags are not required for tray boxes, only the 4x6 address label should be applied), except as provided in 18.5.1c and 18.5.1d.

c. A Priority Mail Express or Priority Mail Open and Distribute shipment destined to a DDU may be contained in USPS-provided Priority Mail Express Flat Rate Boxes and envelopes using the applicable label in 18.5.3a, or Priority Mail Flat Rate Envelopes and boxes using the applicable label in 18.5.3b.

d. Customized *MarketMail* (CMM) pieces may be contained in USPS-provided Priority Mail Express or Priority Mail envelopes and boxes or in any properly labeled container supplied by the mailer.

18.5.2 Priority Mail Express and Priority Mail Tray and Sack Labels

Labels for Priority Mail Express Open and Distribute trays, sacks and similar containers must be barcoded and meet the requirements in 708.6.0. Tray boxes, sacks and other containers (except pallets and pallet boxes) used for Priority Mail Open and Distribute shipments must bear a barcoded tray or sack label that includes the appropriate CIN code that best describes the class and processing category of the contents of the shipment. When no specific CIN code accurately describes all of these elements, the "165" generic code must be used. It is recommended that all EMOD and PMOD shipments bear Intelligent Mail tray barcodes prepared under 708.6.3. Although mailers may affix tray labels on either end of a tray box (or similar container), to the right of the hand-hold cutout, the recommended placement is on the end of the tray box nearest to the EMOD or PMOD address label. All lines of information must be completely visible when inserted into the label holder. Label trays or sacks as follows:

a. Line 1 (destination line) provides information on the destination entry office where the enclosed mail is to be distributed.

   1. For destination delivery unit (DDU) distribution, use the facility name and ZIP Code found in the Drop Shipment Address File available at the USPS FAST website at *https://fast.usps.com* (click Resources in the left-hand navigation bar, then “Go” for “Drop Ship Product File Download”).

   2. For SCF distribution, use the destination in L005, Column B.

   3. For ADC distribution, use the destination in L004, Column B.

   4. For NDC distribution, use the destination in L601, Column B.

   5. For ASF distribution, use the destination in L602, Column B.

b. For Line 2 (content line), for Priority Mail Express Open and Distribute shipments, print "PRIORITY MAIL EXPRESS OPEN AND DIST." For Priority Mail Open and Distribute shipments, print the appropriate human-readable content line from Exhibit 708.6.2.4, or "PMOD" (CIN code 165) when the correct content line is not provided in Exhibit 708.6.2.4.

c. For Line 3 (origin line), show the city and state of the entry Post Office or the mailer's name and the city and state of the mailer's location. It is recommended that the mailer's name also appear with the city and state of the entry Post Office. See 708 for additional standards.

18.5.3 Tags 257 and 267—Priority Mail Express Open and Distribute

Blue Tag 257 and yellow Tag 267 provide a place to affix Priority Mail Express postage and the address label for the destination facility. For mailings prepared under the Electronic Verification System (eVS), use blue Tag 257-EVS and yellow Tag 267-EVS. The applicable tag must be attached to each Priority Mail Express sack, in addition to the Priority Mail Express sack label, to identify it as a Priority Mail Express Open and Distribute shipment as follows:

a. Attach yellow Tag 267 or yellow Tag 267-EVS to sacks used as Priority Mail Express Open and Distribute containers destined to a NDC, ASF, ADC, or SCF facility.

b. Attach blue Tag 257 or blue Tag 257-EVS to sacks used as Priority Mail Express Open and Distribute containers destined to a DDU. Blue Label 257S or blue Label 257S-EVS may be affixed to containers used for Priority Mail Express Open and Distribute shipments prepared under 18.5.1c or 18.5.1d.

18.5.4 Tags 161 and 190—Priority Mail Open and Distribute

Green Tag 161 and pink Tag 190 provide a place to affix Priority Mail postage and the address label for the destination facility. For mailings prepared under the Electronic Verification System (eVS), use green Tag 161-EVS and pink Tag 190-EVS. The applicable tag must be attached to each Priority Mail sack, in addition to the Priority Mail sack label, or container to identify it as a Priority Mail Open and Distribute shipment as follows:

a. Attach green Tag 161 or green Tag 161-EVS to sacks used as Priority Mail Open and Distribute containers to a NDC, ASF, ADC, or SCF facility.

b. Attach pink Tag 190 or pink Tag 190-EVS to sacks used as Priority Mail Open and Distribute containers to a DDU. Pink Label 190S or pink Label 190S-EVS may be affixed to containers used for Priority Mail Open and Distribute shipments prepared under 18.5.1c or 18.5.1d.

18.5.5 Tray Boxes—Priority Mail Express Open and Distribute and Priority Mail Open and Distribute

As an alternative to sacks for Priority Mail Express Open and Distribute and Priority Mail Open and Distribute shipments, unless prepared under 18.5.1c or 18.5.1d, mailers may use USPS-supplied tray boxes for this service. Mailers must place a 1-foot or 2-foot managed mail tray, extended managed mail tray, or flat tray into the appropriate size tray box.

18.5.6 Address Labels

In addition to Tag 257, Tag 267, Tag 161, or Tag 190, USPS-provided containers and envelopes and mailer-supplied containers used for Priority Mail Express Open and Distribute or Priority Mail Open and Distribute must bear an address label that states “OPEN AND DISTRIBUTE AT:” followed by the facility name. Find the facility name and other information for addressing the labels, according to the type of facility, in 18.5.8 through 18.5.12.

18.5.7 Address Label Service Barcode Requirement

An electronic service barcode using the USS 128, USS 39, or Intelligent Mail package barcode (IMpb) (eVS approved mailers) symbology for Priority Mail Express Open and Distribute, and the concatenated GS1-128 or IMpb symbology for Priority Mail Open and Distribute, must be incorporated in the address label. Mailers must prepare address labels using the formats in 18.5.8 through 18.5.12. The labels must include either a service type code “723” with an IMpb or “DB” prefix with a USS 128 or USS 39 barcode for Priority Mail Express Open and Distribute or service type code “55” with a concatenated GS1-128 barcode or “123” with an IMpb for Priority Mail Open and Distribute, to identify the service. The human-readable text “USPS SCAN ON ARRIVAL” must appear above the barcode. USPS certification is required from the National Customer Support Center (NCSC) for each printer used to print barcoded open and distribute address labels, except for barcodes created using USPS webtools or Click-N-Ship For Business. NCSC contact information, formatting specifications for barcodes and electronic files, and certification, are included in Publication 91, *Confirmation Services Technical Guide*. Mailers can use the following options available to create a label with a service barcode for Priority Mail Express Open and Distribute and Priority Mail Open and Distribute address labels:

a. Select a service software developer from the list of companies that have met Postal Service specifications for the electronic file and barcode available at *http://www.usps.com/shipping/shipsystems.htm*.

b. Register and download the USPS Click-N-Ship For Business desktop application for Priority Mail Open and Distribute, available at *http://www.usps.com/business/click-n-ship-for-business.htm*.

c. Register and integrate the USPS Web Tools Application Program Interface (API) for Priority Mail Open and Distribute using your own developers, available at *http://www.usps.com/webtools/*.

d. Use Publication 91, *Confirmation Services Technical Guide*, for technical specifications and requirements.

18.5.8 DDU Address Labels

For the DDU address label, use the name of the DDU on the top line; the street address of the facility on the next line; and city, state, and ZIP+4 code on the last line of the address block. For the DDU address label, use the destination facility name, the street address, city, state, and ZIP+4 found in the Drop Entry Point View File available at USPS' FAST Web site: *https://fast.usps.com* (click on Reports>Mail Direction Search>Drop Entry Point View). Directly below the address, indicate the class and processing category of the enclosed mail. See Exhibit 18.5.8 for an example of a DDU address label.

Exhibit 18.5.8 DDU Address Label

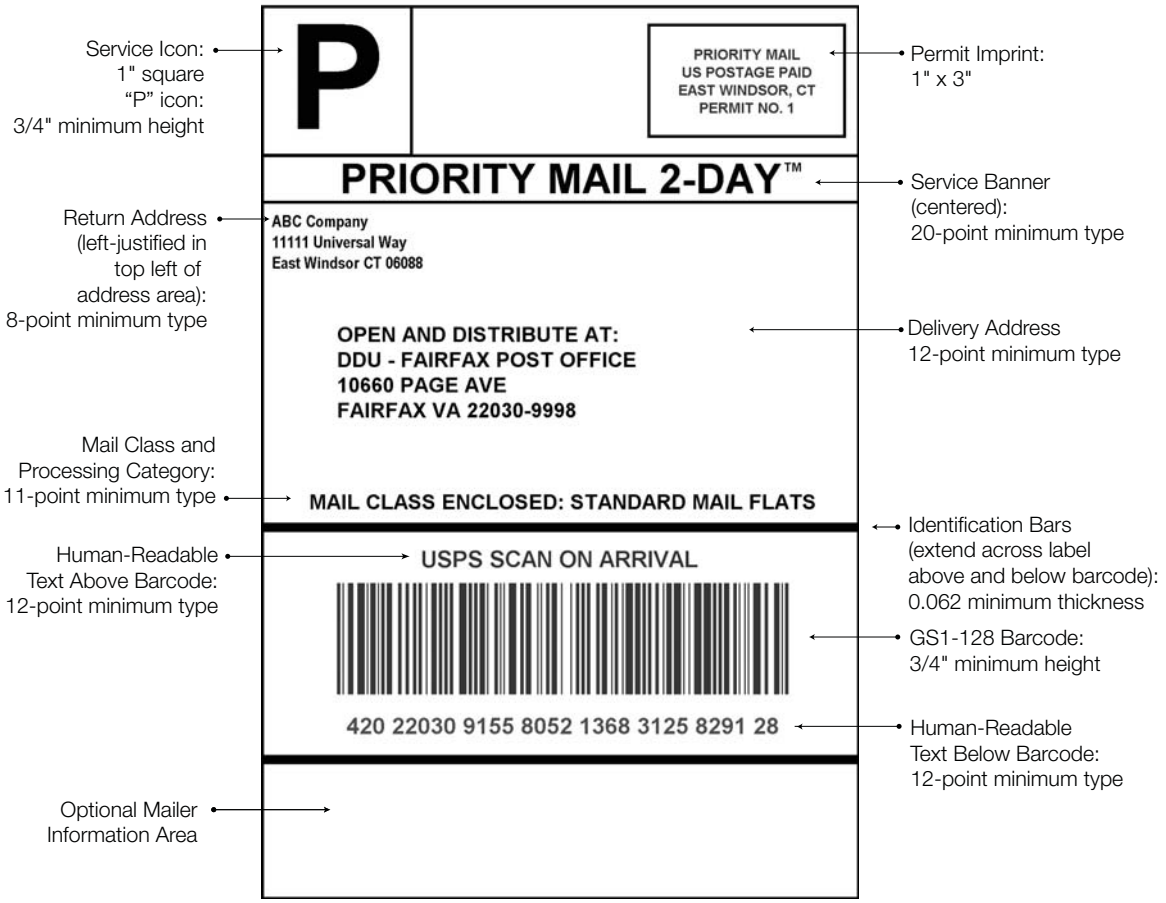

18.5.9 SCF Address Labels

For the SCF address label, use SCF followed by the city, state, and ZIP Code found in the Drop Entry Point View File available at USPS' FAST Web site: *https://fast.usps.com*. Directly below the SCF facility name, indicate the class and processing category of the enclosed mail. See Exhibit 18.5.9 for an example of an SCF address label.

Exhibit 18.5.9 SCF Address Label

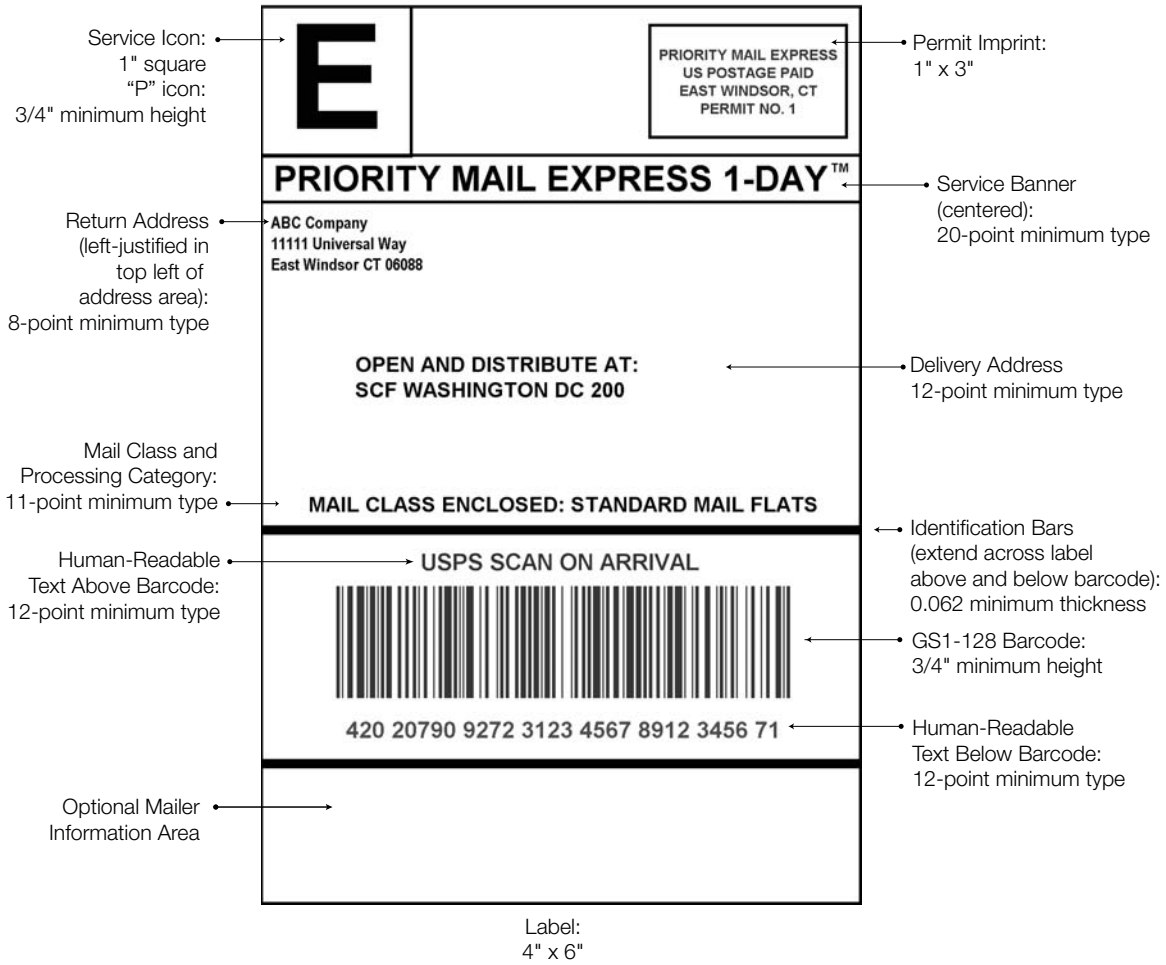

18.5.10 ADC Address Labels

For the ADC address label, use ADC followed by the city, state, and ZIP Code found in the Drop Entry Point View File available at USPS' FAST Web site: *https://fast.usps.com*. Directly below the ADC facility name, indicate the class and processing category of the enclosed mail. See Exhibit 18.5.10 for an example of an ADC address label.

Exhibit 18.5.10 ADC Address Label

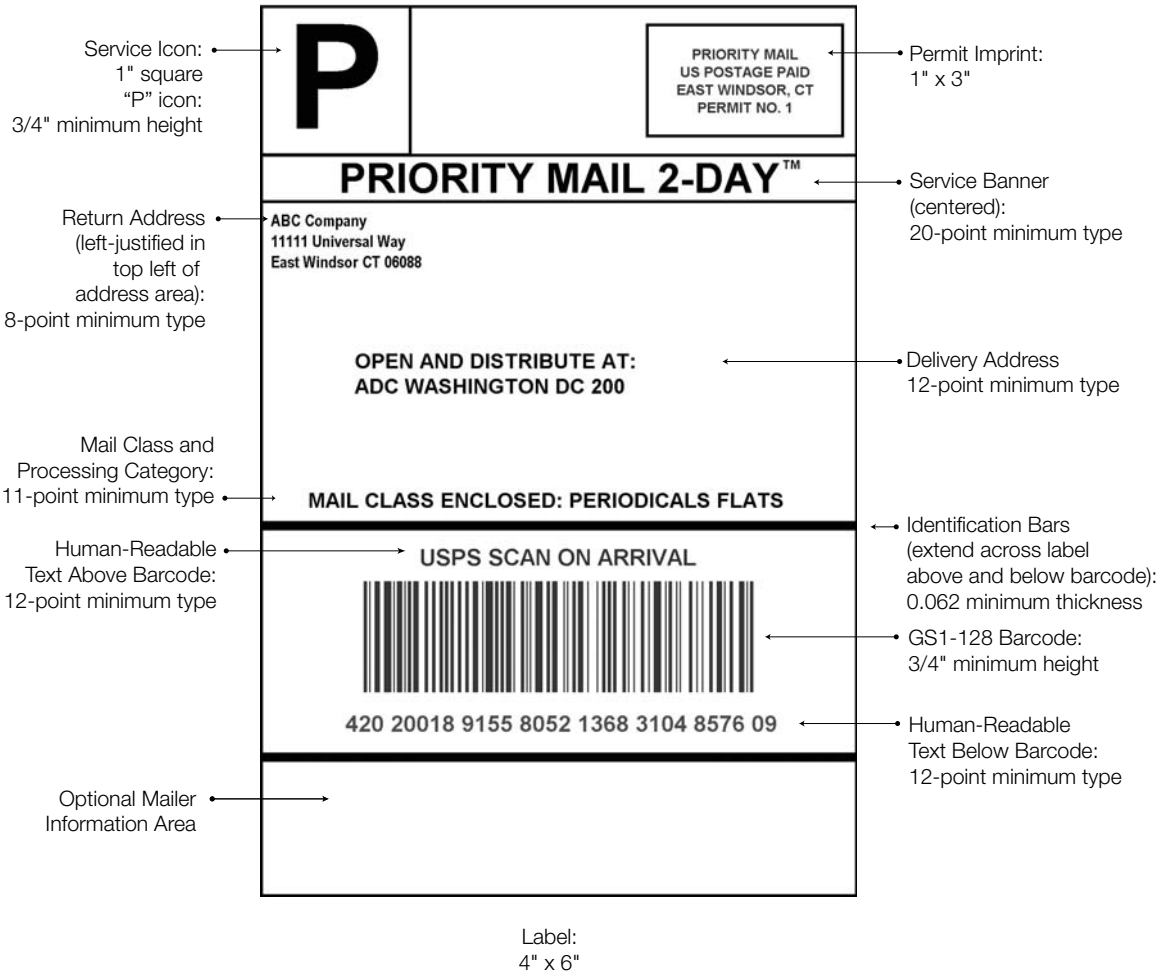

18.5.11 NDC Address Labels

For the NDC address label, use NDC followed by the city, state, and ZIP Code found in the Drop Entry Point View File available at USPS' FAST Web site: *https://fast.usps.com*. Directly below the facility name, indicate the class and processing category of the enclosed mail. See Exhibit 18.5.11 for an example of a NDC address label.

Exhibit 18.5.11 NDC Address Label

18.5.12 ASF Address Labels

For the ASF address label, use ASF followed by the city, state, and ZIP Code found in the Drop Entry Point View File under NDC available at USPS' FAST Web site: *https://fast.usps.com*. Directly below the address, indicate the class and processing category of the enclosed mail. See Exhibit 18.5.12 for an example of an ASF address label.

Exhibit 18.5.12 ASF Address Label

18.5.13 Markings on Enclosed Mail

The enclosed mail may show one of the optional markings below. The optional marking must be placed directly below or to the left of the postage area. The optional marking may appear in any type font. When an optional marking is used, the type size of the required price marking (see 202 for letters, 202 for flats, or 202 for parcels) must be at least 8 points.

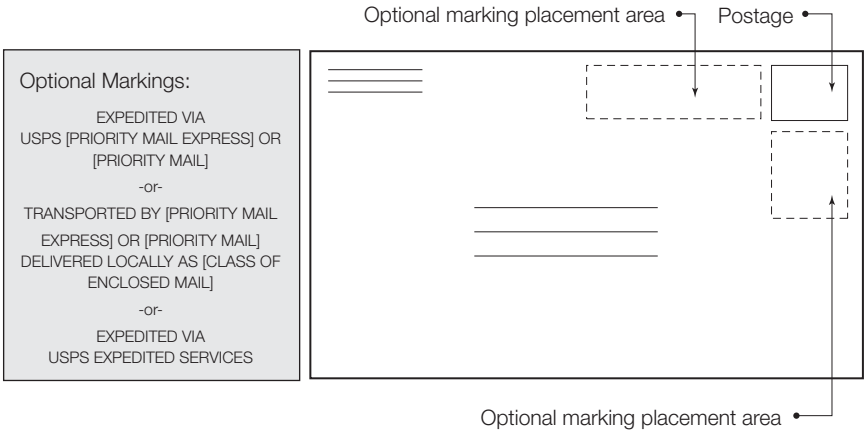

18.6 Enter and Deposit

18.6.1 Verification and Entry

Mailers must prepare Priority Mail Express Open and Distribute and Priority Mail Open and Distribute shipments under 18.2 and 18.5 and present shipments at a business mail entry unit (BMEU) or other location designated by the postmaster to accept both the enclosed mail and, when applicable, Priority Mail Express. Open and Distribute containers must not be sealed until the BMEU verification and acceptance of the contents has been completed, unless accepted under an alternate procedure authorized by Business Mailer Support.

18.6.2 Entry

A PS Form 3152, Confirmation Services Certification, (Priority Mail Open and Distribute) or PS Form 3152-E (Priority Mail Express Open and Distribute) must accompany each Open and Distribute shipment. Mailers must present shipments to the BMEU with enough time for acceptance, processing, and dispatch before the facility's critical entry time for Priority Mail Express or Priority Mail.

18.6.3 Postmark and Signing Tags and Labels

Upon completion of the verification and acceptance of the contents, all Open and Distribute tags and labels must be postmarked and signed in the space provided unless prepared under an authorized Electronic Verification System (eVS) manifest mailing system. Open and Distribute eVS tags and labels bear the marking “APPROVED eVS MAILER” in the space normally designated for the postmark and signature.

19.0 Metered Mail Drop Shipment

19.1 Basic Information

19.1.1 General

A customer may affix postage using a postage meter (postage evidencing system) licensed at one Post Office (licensing Post Office) and deposit that mail at another Post Office (entry Post Office) only if prior authorization is obtained from the USPS under one of the procedures described below. Such authorization may be revoked under 19.2.6 when the USPS determines that information or circumstances supporting the original authorization may no longer be accurate, complete, or applicable. (604.4.0 provides an exception to this standard for metered Priority Mail Express, Priority Mail, and single-piece price metered mail.) These general conditions apply:

a. The meter stamp or indicium must show the name of the licensing Post Office.

b. Metered mailpieces that bear meter impressions or other endorsements containing the wrong Post Office name, authorization number (as applicable), or other required information are not accepted.

c. A metered mail drop shipment must be deposited at the time and place and under any additional condition specified by the USPS.

d. Annual mailing fees, as applicable for the class of mail, must be paid at the office(s) where mailings will be entered, as required under 233.3.4 or 243.3.4.

19.1.2 Effect on Service

The USPS assumes no responsibility for the material presented until it is accepted into the mail. The USPS is not responsible for service delays when the mailer does not meet the applicable preparation or entry requirements. Entry of mail by drop shipment may adversely affect the USPS's ability to achieve the applicable service objectives.

19.1.3 Changes

A mailer authorized to drop ship metered mail must inform the approving official of all changes to the information originally provided as part of the application. When the USPS asks, the mailer must submit additional information supporting that authorization. Failure to provide this information is grounds to revoke the authorization.

19.2 Authorization

19.2.1 Options 1 & 2

Authorizations under Options 1 and 2 in 19.3, and 19.4, are granted to meter license holders. The meter license holder must apply in writing to the district manager of business mail entry whose district includes the licensing Post Office of the meter holder.

19.2.2 Options 3 & 4

Authorization under Option 3 in 19.5, is granted to mailers intending to present mail for other meter license holders (including their own mail, if applicable) at one location other than the licensing office(s), whereas authorization under Option 4 in 19.6, is granted for mailings presented at more than one location. For authorization under

Option 3, the mailer or consolidator must apply in writing to the district manager of business mail entry whose district includes the Post Office(s) where the mailings are verified for presort preparation and payment of postage. Applications under Option 4 must be submitted to the manager, Business Mailer Support.

19.2.3 Application

The application must describe the classes of mail to be deposited and the volume, processing category, frequency of mailing, and requested deposit schedule of each. The application must also state how the mail to be entered meets applicable eligibility and service standards and must identify any third party preparing and presenting the mail. The application must be prepared on the mailer's letterhead and signed by an authorized manager or representative. There is no USPS form for this purpose. Additional information is required for Options 3 and 4. Mailers seeking authorization under Option 4 must contact Business Mailer Support, USPS Headquarters, for guidance (see 608.8.0 for address).

19.2.4 Notification

The manager of business mail entry (or the manager, Business Mailer Support under Option 4) notifies the applicant in writing of approval or conditions of approval, including the drop shipment (DS) authorization number, or denial.

19.2.5 Application Denial

A decision denying an application for operational reasons may be appealed within 15 days of its receipt to the area manager of processing and distribution. If denied because of noncompliance with applicable eligibility standards, the applicant may appeal the denial under 607.2.0.

19.2.6 Revocation

An authorization may be revoked:

a. When it is determined that the authorized entry no longer reduces postal handling or improves service, or is not in the best interests of the USPS.

b. For nonuse during any consecutive 12 months.

c. When used in operating any unlawful scheme or enterprise, or for any noncompliance with the regulations governing the use of postage meters.

19.2.7 USPS Authorities

Authorization is revoked by:

a. The manager of business mail entry of the district originally issuing authorization or the manager, Business Mailer Support.

b. The postmaster of the licensing Post Office (under any option) when it is used in operating any unlawful scheme or enterprise, or for any noncompliance with the regulations for postage meters.

19.2.8 Nonuse

If revocation is for nonuse, and the mailer shows that use is to resume within 90 days after the revocation notice, revocation may be deferred for a period not to exceed 90 days from the date of the original revocation notice.

19.2.9 Appeal

Written appeal of the revocation notice may be made within 15 days of its receipt, under 607.2.0.

19.3 Option 1: Deposit at P&DC/F

Metered mail of any class may be entered and deposited by the licensed meter holder or an agent at the local processing and distribution center/facility (P&DC/F) making the initial originating distribution of mail deposited at the Post Office where the meter license is held. Mail must be prepared under the standards for the class and price claimed and as specified in the drop shipment authorization. The mailer may be required to prepare and deposit the mail in an additional manner that best enhances postal handling as specified in the drop shipment authorization. Any such requirements are modified to reflect changes in the mailings subsequently presented by the mailer. Failure to meet these standards may lead to revocation of the authorization.

19.4 Option 2: Deposit at Another Post Office

19.4.1 Eligibility

Metered mail of any class may be entered and deposited by the licensed meter holder or an agent at a Post Office other than the licensing Post Office or P&DC/F serving the licensing Post Office. Mail must be prepared under the standards for the class and price claimed and as specified in the drop shipment authorization. The mailer may be required to perform additional preparation and meet specific deposit schedules to enhance postal handling. Any such requirements are specified in the drop shipment authorization and may be modified to reflect changes in the mailings subsequently presented by the mailer. Failure to meet these standards may lead to revocation of the authorization.

19.4.2 Endorsement

Each mailpiece deposited under this option must contain an endorsement with the city and state of the entry Post Office, the words “Drop Shipment Authorization” (or the abbreviation “D/S AUTH”), and the unique authorization number issued by the district manager of business mail entry serving the entry Post Office. If the abbreviation “D/S AUTH” is not used, the mailing office ZIP Code may be used instead of the city and state of mailing. The endorsement must be included in digital indicia or placed outside the indicium boundary in 8-point or larger type by a computer or mechanical method providing a clear and legible impression. For letter press indicia, the endorsement must appear in the ad plate area. The application and the endorsement format must be approved by the district manager of business mail entry before mail is deposited under this option.

EXAMPLES

Full Endorsement – Mailing Office City and State

MAILED AT CHICAGO IL DROP SHIPMENT AUTHORIZATION 12	DROP SHIPMENT AUTHORIZATION 48 MAILED AT YAKIMA WA

Full Endorsement – Mailing Office ZIP Code

MAILED AT 606 DROP SHIPMENT AUTHORIZATION 12	DROP SHIPMENT AUTHORIZATION 48 MAILED AT 98901

Abbreviated Format

CHICAGO IL D/S AUTH 12	D/S AUTH 48 YAKIMA WA

19.4.3 Not Valid

Drop shipment endorsements authorized before March 19, 1989, are no longer valid.

19.4.4 Price and Class Marking

The drop shipment endorsement placed in the ad plate area or within the indicium boundary may include the marking required by the standards for the price claimed if that marking is placed directly below the drop ship endorsement and meets the standards in 202 for letters, 202 for flats, and 202 for parcels. The marking may also be provided separately directly below the indicium boundary if the marking meets the relevant size and legibility standards.

19.5 Option 3: Consolidated Drop Shipment With Endorsement

19.5.1 General

A mailer presenting a consolidated mailing may apply to collect metered mail bearing postage from meters licensed at different Post Offices and present such mailings at one Post Office, subject to the conditions and limitations in 19.5. All conditions for presenting presort mailings must be met as applicable for the class of mail. All applicable conditions under 604.9.4, and 5.0, must also be met.

19.5.2 Barcoded and Nonbarcoded Portions

The majority of the mail consolidated for entry under Option 3 must be prepared in a single mailing (with a single postage statement) in which all pieces, regardless of price claimed, have the correct barcode (ZIP+4 for flats, delivery point for letters and cards) and are physically compatible with automated mail processing equipment. The entry Post Office may reject a mailing if all pieces do not have the correct barcode. A minor portion of the consolidated mail may be prepared as a second, separate mailing (with its own postage statement) in which the pieces do not bear the correct barcode (or are not compatible with automated processing equipment) but do meet the standards that apply to the prices claimed.

19.5.3 Service Objective

When a mailpiece is part of a consolidated mailing, the service objective that applies must be the same as or better than that which would have applied had the piece been entered at the licensing Post Office. As part of the application, documentation

must be provided by the mailer to show compliance with this standard to USPS satisfaction. (Typical documentation lists the service objective that applies to each licensing Post Office from whose area mail is to be consolidated and the standard that applies to that mail when it is entered under Option 3.)

19.5.4 Information

An application under Option 3 must be submitted by the mailer (i.e., the party to present the consolidated mailing to the USPS). In addition to the information detailed in 19.2.3, the application must identify the meter licensees whose mail is to be consolidated and the serial numbers of each licensee's meters.

19.5.5 Notice to Licensees

After receiving an authorization notice, the mailer must give written notice to each licensee whose mail is to be consolidated under the authorization. The mailer's notice must include a copy of the authorization, a full explanation of preparation requirements, and a reminder that consolidation of their mail can adversely affect service. The mailer must give copies of each licensee notice to the entry office and licensing office postmasters.

19.5.6 Additional Standards

Metered mail deposited under Option 3 must be prepared as specified by the USPS. This preparation may extend beyond that which is required to qualify for the price paid for the mail, and may require the mail to be configured and its deposit scheduled to enhance USPS handling. Failure to meet these standards can lead to revocation of the authorization.

19.5.7 Endorsement

Each mailpiece deposited under this option must be endorsed with the letters "DS," followed by a unique drop shipment authorization number (issued by the manager of business mail entry of the district in which the mail is entered) and the words "MAILED AT," followed by the 3-digit ZIP Code prefix of the entry Post Office. The endorsement may also include the correct mailing date. (Including this date does not relieve the meter licensee(s) from meeting the standards for correct dating of metered mail.) The endorsement must be printed immediately below the meter stamp or indicium or in the lower left corner of the mailpiece, in 8-point or larger type, by a computer or another mechanical method providing a clear and legible endorsement. The district manager of business mail entry issuing the authorization number must approve the endorsement before drop shipment mailings may be made under this option.

EXAMPLES

DS12 MAILED AT 606 – 04/01/04

MAILED AT 606 DS12 – 04/01/04

DS48 MAILED AT 981

MAILED AT 981 DS48

19.5.8 Placement

The drop shipment endorsement must not interfere with the barcode clear zone or any other marking.

19.5.9 Preparation

The preparation and documentation standards that apply to the prices claimed in the mailing remain unaffected by entry under Option 3.

19.5.10 Consolidation

Mail collected from licensees for mailing under Option 3 may not be further collected or consolidated by any other mailer or consolidator.

19.6 Option 4: Consolidated Drop Shipment Without Endorsement

19.6.1 General

A mailer presenting a consolidated mailing may apply to collect metered mail bearing postage from meters licensed at different Post Offices and consolidate that mail for mailing (entry and deposit) at other entry Post Offices, subject to the conditions and limitations in 19.6. All conditions for presenting presort mailings must be met as applicable for the class of mail. All applicable conditions under 604.9.4, and 5.0, must also be met.

19.6.2 Barcoded and Nonbarcoded Portions

The majority of the mail consolidated for entry under Option 4 must be prepared in a single mailing (with a single postage statement) in which all pieces, regardless of price claimed, have the correct barcode (ZIP+4 for flats, delivery point for letters and cards) and are physically compatible with automated mail processing equipment. The entry Post Office may reject a mailing if all pieces do not have the correct barcode. A minor portion of the consolidated mail may be prepared as a second, separate mailing (with its own postage statement) in which the pieces do not bear the correct barcode (or are not compatible with automated processing equipment) but do meet the standards that apply to the prices claimed.

19.6.3 Service Objective

When a mailpiece is part of a consolidated mailing, the service objective that applies must be the same as or better than that which would have applied had the piece been entered at the licensing Post Office. As part of the application, documentation must be provided by the mailer to show compliance with this standard to USPS satisfaction. (Typical documentation lists the service objective that applies to each pair of origin/destination 3-digit ZIP Codes in the consolidated mailing, both if entered at the licensing Post Office and if entered as authorized under Option 4.)

19.6.4 Information

An application under Option 4 must be submitted by the mailer (i.e., the party to present the consolidated mailing to the USPS). The information in 19.2, must be provided for each Post Office at which mail is to be entered under Option 4. The application must also detail: the meter licensees whose mail is to be consolidated and the serial numbers of each licensee's meters; the mailer's method of sortation, documentation, and quality control; and the mailer's procedures for ensuring that all pieces in the consolidated mailing are entered to meet or exceed the service objectives for the place of origin.

19.6.5 Notice to Licensees

After receiving the authorization notice, the mailer must give written notice to each licensee whose mail is to be consolidated under the authorization. The mailer's notice must include a copy of the authorization, a full explanation of preparation requirements, and a reminder that consolidation of their mail can adversely affect service. The mailer must give copies of each licensee notice to the entry office and licensing office postmasters.

19.6.6 Additional Standards

Metered mail deposited under Option 4 must be prepared in segments for entry at postal facilities according to schemes and schedules provided by the USPS. Further, each segment must be prepared for dispatch without additional postal processing or handling, and deposited at places and times specified by the USPS. The USPS may stipulate preparation beyond that required to qualify for the price paid for the mail. Failure to meet these standards can lead to revocation of the authorization.

19.6.7 Transportation

The mailer must provide transportation for the consolidated mailing, unless the USPS provides plant load service.

19.6.8 Endorsement

A drop shipment endorsement is not required on pieces mailed under Option 4.

19.6.9 Preparation

The preparation and documentation standards that apply to the prices claimed in the mailing remain unaffected by entry under Option 4.

19.6.10 Consolidation

Mail collected from licensees for mailing under Option 4 may not be further collected or consolidated by any other mailer or consolidator.

19.6.11 Documentation

The mailer/consolidator must keep documentation supporting each consolidated mailing, including the volume collected from each meter licensee, for at least 1 year from the date of mailing, and make it available for postal inspection on request.

20.0 Postage Due Weight Averaging Program

20.1 Basic Information

20.1.1 Description

The Postage Due Weight Averaging (PDWA) program is a comprehensive, statistically valid program to calculate postage due returns in bulk, rather than rating each individual piece. This program, subject to application, approval, and authorization, is available for customers who receive a minimum of 50,000 combined postage due parcels and flats, Merchandise Return Service (MRS) pieces, or Bulk Parcel Return Service (BPRS) pieces. The PDWA program applies a postage due cost factor, generated through a 4-week rolling average sampling period, to assess postage and fees based upon the net weight of each container. A new postage due cost factor is calculated and applied weekly, based on the

previous 4 weeks of sampling data. The 4-week rolling average is not applicable if a new PDWA system is implemented or if there is a postage price change. When these circumstances occur, the new postage due cost factor is determined through the sampling in the first week. That new postage due cost factor is then applied in the first 2 weeks. After the fourth week of sampling, the postage due cost factor is a complete 4-week rolling average. PDWA is designed to significantly reduce processing time and provide for shorter verification time for customers.

20.1.2 General Qualification

A PDWA program may be authorized for applicants who receive a minimum of 50,000 combined returns per year. Returns can include all classes of mail where postage due fees are assessed, including MRS and BPRS return pieces. Only parcels and flats may be processed through the PDWA program. See 20.2 for application process.

20.1.3 Quality Control

[3-3-14] PDWA customers may elect to establish a quality control program to ensure that all missorted and accountable mail (including Certified Mail, collect on delivery (COD), return receipt for merchandise, USPS Tracking, Adult Signature, and Signature Confirmation) is identified and returned to the servicing Post Office prior to being opened. If the customer elects to not implement a quality control program, the customer must assume all responsibility for claims filed by clients who returned their product to them via accountable mail. The program must include:

a. Training all employees who process returns on how to identify accountable items.

b. Permanently displaying examples of accountable return items in full view of employees responsible for the identification of accountable returns.

c. Instructional material pertaining to identifying accountable returns.

d. The random selection and tracking of individual sample pieces within the customer's operational process to assure that they are identified.

20.2 Authorization

20.2.1 Application

The customer or agent must submit a PDWA application to the postmaster of the office through which delivery service is provided. The customer must provide information including current permits, authorizations, and average volume figures. The postmaster will provide input regarding staffing, hours of operation, standard operating procedures, and recommendations or comments for approval.

20.2.2 Approval

The Business Mailer Support manager, USPS Headquarters, approves or denies applications for PDWA systems. Approved mailers are provided an authorization letter (or previously-approved service agreement) specifying, among other things, the customer's quality control procedures and procedures for handling missorted and accountable mail.

20.2.3 Denial

If the PDWA application is not approved, the Business Mailer Support manager will send a written notice to the applicant with the reason for denial.

20.2.4 Authorization Period

Authorization remains in effect until the Business Mailer Support manager or the customer cancels the agreement. If Postal Service periodic reviews or customer-supplied information indicates a need for modification, then the authorization or service agreement will be amended with concurrence of the Business Mailer Support manager and the customer.

20.2.5 USPS Suspension

The Business Mailer Support manager may suspend a PDWA at any time if the authorization or service agreement does not provide adequate revenue protection, or the customer (or agent) fails to meet the criteria established by the agreement.

20.2.6 Mailer Cancellation

The customer may cancel a PDWA authorization (or service agreement) by writing to the Business Mailer Support manager (see DMM 608.8.0 for address).

21.0 Optional Combined Parcel Mailings

21.1 Basic Standards for Combining Parcel Select, Package Services, and Standard Mail Parcels

21.1.1 Basic Standards

Package Services parcels, Parcel Select (including Parcel Select Lightweight) parcels, and Standard Mail parcels in a combined parcel mailing must meet the following standards:

a. Each parcel in a combined mailing is subject to the applicable content and price eligibility standards for the price claimed.

b. Mailers must be authorized under 8.1.4.

c. Mailers must pay all applicable presort mailing and destination entry mailing fees.

d. Combined mailings must meet the following minimum volume requirements:

   1. Standard Mail—Minimum 200 pieces or 50 pounds of Standard Mail parcels.

   2. Package Services and Parcel Select—Minimum 50 parcels combined.

   3. If claiming Presorted BPM, Media Mail or Library Mail prices—Minimum 300 parcels per subclass.

21.1.2 Postage Payment

Mailers must pay postage for all pieces with a permit imprint at the Post Office serving the mailer's plant using an approved Manifest Mailing System (MMS) under 2.0. The MMS must include procedures for combined mailings approved by Business Mailer Support. Mailers may document and pay postage using the Electronic Verification System (eVS) under 2.9.

21.1.3 Documentation

Mailers must prepare separate postage statements for Standard Mail, Parcel Select, and Package Services pieces in the combined mailing. At the time of mailing, mailers must provide all postage statements and a Business Mailer Support-approved manifest prepared according to 2.0 and this section. Presort documentation is required as applicable for each price claimed if the manifest does not list pieces in presort order.

21.1.4 Authorization

A mailer who wants to present combined parcel mailings must submit a written request to the Manager, Business Mailer Support (See 608.8.1 for address). The request must show the mailer's name and address, the mailing office, evidence of authorization to mail under 2.0, procedures for the combined parcel mailing, the expected date of first mailing, a sample of the required manifest, and a sample USPS Qualification report. Business Mailer Support will review the documentation and provide written authorization when approved. A mailer may terminate an authorization at any time by written notice to the postmaster of the office serving the mailer's location. Business Mailer Support may terminate an authorization, by written notice, if the mailer does not meet the standards.

21.2 Price Eligibility

21.2.1 Eligible Prices

Combined parcels may be eligible for Standard Mail, Parcel Select, single-piece and Presorted Media Mail, single-piece and Presorted Library Mail, single-piece and Presorted Bound Printed Matter, and destination entry prices and discounts as applicable.

21.2.2 Price Application

Apply prices based on the criteria in 200 and the following standards:

a. Standard Mail and Parcel Select parcel prices are based on the container level and entry (see 243.5.0 and 253).

b. Bound Printed Matter parcels qualify for single-piece prices or Presorted Bound Printed Matter prices as follows:

   1. Presorted prices for BPM pieces prepared in other than MXD ADC/MXD NDC containers when there are at least 300 pieces of BPM in the combined mailing.

   2. Nonpresorted prices for pieces prepared in MXD ADC/MXD NDC containers and when there are less than 300 pieces of BPM in the combined mailing.

   3. Destination entry prices based on entry.

c. Media Mail parcels qualify for single-piece, basic, or 5-digit prices as follows:

   1. 5-digit prices for pieces prepared in 5-digit/scheme containers when there are at least 300 pieces of Media Mail in the combined mailing.

   2. Basic prices for pieces prepared in 3-digit, ADC, and NDC containers when there are at least 300 pieces of Media Mail in the combined mailing.

3. Single-piece prices for pieces prepared in MXD ADC/MXD NDC containers and when there are less than 300 pieces of Media Mail in the combined mailing.

d. Library Mail parcels qualify for single-piece, basic, or 5-digit prices as follows:

1. 5-digit prices for pieces prepared in 5-digit/scheme containers when there are at least 300 pieces of Library Mail in the combined mailing.
2. Basic prices for pieces prepared in 3-digit, ADC, and NDC containers when there are at least 300 pieces of Library Mail in the combined mailing.
3. Single-piece prices for pieces in MXD ADC/MXD NDC containers and when there are less than 300 pieces of Library Mail in the combined mailing.

e. Parcel Select prices are based on the following:

1. Destination entry for pieces in 5-digit, 3-digit, ADC, or NDC containers.
2. NDC presort discounts for origin entered (other than a NDC) Parcel Select pieces placed in 5-dig, 3-digit, ADC, or NDC containers.
3. ONDC presort discounts for origin NDC entered Parcel Select pieces placed in 5-digit, 3-digit, ADC, or NDC containers.

21.3 Mail Preparation

21.3.1 Basic Standards

Prepare combined mailings as follows:

a. Different parcel types must be prepared separately for combined parcel mailings as indicated below:

1. Standard Mail, Parcel Select, Parcel Select Lightweight, and Package Services machinable parcels. Use “STD/PSVC MACH” for line 2 content labeling.
2. Standard Mail, Parcel Select, Parcel Select Lightweight, and Package Services irregular parcels at least 2 ounces and up to (but not including) 6 ounces, except for tubes, rolls, triangles, and other similarly irregularly-shaped pieces. Use “STD/PSVC” for line 2 content labeling.
3. Standard Mail, Parcel Select, Parcel Select Lightweight, and Package Services tubes, rolls, triangles, and similarly irregularly-shaped parcels; and all parcels weighing less than 2 ounces. Use “STD/PSVC IRREG” for line 2 content labeling.
4. Combine all parcel types in 5-digit and 5-digit scheme containers. Use “STD/PSVC PARCELS” for line 2 content labeling.

b. Mailers must prepare all parcels in sacks under 245.5.0, or on pallets, or in pallet boxes under 8.0 to achieve the finest level of sortation.

21.3.2 Combining Standard Mail, Parcel Select, and Package Services Machinable Parcels

Prepare and enter Standard Mail, Parcel Select, Parcel Select Lightweight, and Package Services machinable parcels, and Standard Mail Marketing parcels 6 ounces or more, as combined machinable parcels as shown in the table below.

COMBINED PREPARATION			
Entry	**5-Digit/Scheme**[1]	**NDC/ASF** (Required)	**Mixed NDC** (Required)
Origin	Sacks - 15-piece or 30-lb minimum Pallets - 250-lb minimum	Sacks - 10-piece or 20-lb minimum Pallets - 250-lb minimum	Sacks - No minimum Pallets - 250-lb minimum
DNDC	Sacks - 15-piece or 30-lb minimum Pallets - 100-lb minimum	Sacks - 10-piece or 20-lb minimum Pallets - 100-lb minimum	
DSCF	Sacks - 10-piece or 10-lb minimum Pallets - 100-lb minimum		
DDU	Sacks - No minimum Pallets - No minimum		

1. All parcel types may be combined in 5-digit containers to meet minimum volumes.

21.3.3 Combining Standard Mail, Parcel Select, and Package Services APPS-Machinable Parcels

Prepare and enter Standard Mail, Parcel Select, Parcel Select Lightweight, and Package Services irregular parcels, and Standard Mail Marketing parcels (weighing at least 2 ounces, but less than 6 ounces, that are not tubes, rolls, triangles, or similarly irregularly shaped parcels) as combined APPS-machinable parcels as shown in the table below.

	COMBINED PREPARATION			
Entry	**5-Digit/Scheme**[1]	**3-Digit** (Required)	**ADC** (Required)	**Mixed ADC** (Required)
Origin	Sacks - 15-piece or 30-lb minimum Pallets - 250-lb minimum	Sacks - 10-piece or 20-lb minimum Pallets - 250-lb minimum	Sacks - 10-piece or 20-lb minimum Pallets - 250-lb minimum	Sacks - No minimum Pallets - 250-lb minimum
DNDC	Sacks - 15-piece or 30-lb minimum Pallets - 100-lb minimum	Sacks - 10-piece or 20-lb minimum Pallets - 100-lb minimum	Sacks - 10-piece or 20-lb minimum Pallets - 100-lb minimum	
DSCF	Sacks - 10-piece or 10-lb minimum Pallets - 100-lb minimum	Sacks - 10-piece or 20-lb minimum Pallets - 100-lb minimum		
DDU	Sacks - No minimum Pallets - No minimum			

1. All parcel types may be combined in 5-digit containers to meet minimum volumes.

21.3.4 Combining Standard Mail, Parcel Select, and Package Services Parcels (Not APPS-Machinable)

Prepare and enter Standard Mail, Parcel Select, Parcel Select Lightweight, and Package Services, and Standard Mail Marketing parcels under 2 ounces, as combined not APPS-machinable parcels as shown in the table below.

COMBINED PREPARATION				
Entry	**5-Digit/Scheme**[1]	**3-Digit** (Required)	**ADC** (Required)	**Mixed ADC** (Required)
Origin	Sacks - 15-piece or 30-lb minimum Pallets - 250-lb minimum	Sacks - 10-piece or 20-lb minimum Pallets - 250-lb minimum	Sacks - 10-piece or 20-lb minimum Pallets - 250-lb minimum	Sacks - No minimum Pallets - 250-lb minimum
DNDC	Sacks - 15-piece or 30-lb minimum Pallets - 100-lb minimum	Sacks - 10-piece or 20-lb minimum Pallets - 100-lb minimum	Sacks - 10-piece or 20-lb minimum Pallets - 100-lb minimum	
DSCF	Sacks - 10-piece or 10-lb minimum Pallets - 100-lb minimum	Sacks - 10-piece or 20-lb minimum Pallets - 100-lb minimum		
DDU	Sacks - No minimum Pallets - No minimum			

1. All parcel types may be combined in 5-digit containers to meet minimum volumes.

22.0 RESERVED

23.0 Full-Service Automation Option

23.1 Description

[1-26-14] Access to full-service automation option benefits requires the use of Intelligent Mail barcodes to uniquely identify each mailpiece. In addition to the standards described in 2.0, all pieces entered under the full-service option must individually meet the eligibility requirements for automation prices according to their class and shape. Full-service automation mailings require Intelligent Mail barcodes on mailpieces; Intelligent Mail tray labels on trays and sacks; and Intelligent Mail container placards on pallets or similar containers (when created). Additional requirements include the use of an approved electronic method to transmit postage statements and mailing documentation to the USPS (describing how mailpieces are linked to trays or sacks, and containers, if applicable) and scheduling dropship appointments through the Facility Access and Shipment Tracking (FAST) system for destination network distribution center, destination area distribution center, and destination sectional center facility dropshipments.

23.2 General Eligibility Standards

[1-26-14] First-Class Mail, Periodicals, and Standard Mail letters and flats meeting eligibility requirements for automation or carrier route prices (except for Standard Mail ECR saturation flats), and Bound Printed Matter flats (except for Presorted DDU-entered and carrier route flats) are potentially eligible for full-service incentives. All pieces entered under full-service pricing must:

a. Bear a unique Intelligent Mail barcode.

b. Be part of a mailing using unique Intelligent Mail tray labels on all trays and sacks.

c. Be part of a mailing using unique Intelligent Mail container barcodes on all destination-entry pallets and other containers optionally or required to be prepared under 8.0 or as part of a customer/supplier agreement. Pallets or approved alternate containers, with unique Intelligent Mail container barcodes, must also be used whenever a mailing is entered at the dock of a USPS-processing facility and meets minimum container/pallet volume requirements under 8.0. A customer/supplier agreement is authorized with a service agreement signed by the mailer, the USPS District Manager, Customer Service, and the USPS Processing and Distribution Center manager. The service agreement contains provisions regarding mailer and USPS responsibilities.

d. Be part of a mailing using an approved electronic method to transmit a postage statement and mailing documentation to the *PostalOne!* system.

e. Be scheduled for an appointment through the Facility Access and Shipment Tracking (FAST) system when deposited as a DNDC, DADC, or DSCF drop-shipment.

23.3 Eligibility for Waiver of Annual Fees and Waiver of Deposit of Permit Imprint Mail Restrictions

[7-28-14] Mailers who present only full-service automation mailings (of First-Class Mail cards, letters, and flats, Standard Mail letters and flats, or Bound Printed Matter flats) that contain 90 percent or more pieces eligible for full-service automation prices are eligible for the following exceptions to standards:

a. The annual presort mailing or destination entry fees, as applicable, will be waived for qualified full-service mailings.

b. Mailers may present qualified full-service mailings with mailpieces bearing a current valid permit imprint for acceptance at any USPS acceptance office that has *PostalOne!* acceptance functions without payment of any additional permit imprint application or annual mailing fees.

c. If any mailing (of the classes and shapes of mail in 23.3) presented under a mailing permit causes the permit holder's cumulative twelve-month Full-Service ratio (i.e. the percentage of all the permit holder's Full-Service eligible pieces that were actually mailed as Full-Service items over the previous twelve months) to fall below a 90 percent threshold:

   1. The mailer must pay the applicable annual fee before that mailing may be accepted.

   2. The provision in 23.3b for presentation of mailings at multiple offices is discontinued for all mailings presented under the applicable permit imprint.

23.4 Preparation

23.4.1 Intelligent Mail Barcodes

Mailers must include an Intelligent Mail barcode on each mailpiece as described in 708.4.0 that accurately encodes the following fields:

a. Barcode ID.

b. Service Type ID.

c. Mailer ID. At the option of the mail owner, the Mailer ID field can be populated with the Mailer ID of the mail owner or mail preparer.

d. Serial number. Except for mail prepared under 23.5.3, each mailpiece must be encoded with a unique serial number. Mailers must ensure that these numbers remain unique for a period of at least 45 days. Serial numbers associated to an individual Mailer ID must not be duplicated within this 45-day period, regardless of the entry location.

e. Delivery point routing code. All Intelligent Mail barcodes must include an accurate delivery point routing code.

23.4.2 Intelligent Mail Tray Labels

[1-26-14] All trays and sacks must contain accurately encoded Intelligent Mail tray labels as described in 708.6.3. Mailing documentation, when required, must associate each mailpiece to a corresponding tray or sack, or to a logical tray or sack, as described in 23.4.4. Each tray or sack must be encoded with a unique serial number. Tray or sack serial numbers associated to an individual Mailer ID cannot be duplicated within a 45-day period, regardless of the acceptance location.

23.4.3 Intelligent Mail Container Placards

[1-26-14] All required pallets and similar containers (such as all-purpose containers, hampers, and gaylords) and all containers prepared under 8.0 in full-service mailings must display container placards that include accurately encoded Intelligent Mail container barcodes as described in 708.6.4. Mailing documentation, when required, must associate each mailpiece (and tray or sack, if applicable) to a corresponding container (or a logical container) as described in 23.4.4, unless otherwise authorized by the USPS. Each container must be encoded with a unique serial number. Container barcodes must not be duplicated within a 45-day period, regardless of the acceptance location.

23.4.4 Electronic Documentation

[1-26-14] Mailers must electronically submit postage statements and mailing documentation to the *PostalOne!* system. Documentation must describe how each mailpiece is linked to a uniquely identified tray or sack, and how each mailpiece and tray or sack is linked to a uniquely identified container. Linking to logical trays, sacks, and containers via sibling records is an option when linking to a specific tray, sack, or container is not feasible. The documentation must also meet the requirements in *A Guide to Intelligent Mail for Letters and Flats* (at *ribbs.usps.gov/*). Mailers must transmit postage statements and documentation to the *PostalOne!* system using Mail.dat, Mail.XML, or Postal Wizard (see 23.5.3).

23.4.5 Scheduling Appointments

Mailers must schedule appointments using the Facility Access and Shipment Tracking (FAST) system for dropship mailings (except for mailings entered at a DDU) or as required in a customer/supplier agreement. Mailers may schedule appointments online using the FAST Web site at *fast.usps.com* or they may submit appointment requests through *PostalOne!* FAST Web Services at *www.uspspostalone.com*, using Mail.XML or Mail.XML with Mail.dat.

23.4.6 Preparation of Containers

Mailings under the full-service automation option may be containerized, when volume warrants, in uniquely identified containers by palletizing bundles, sacks, or trays under standards in 8.0. Mailers required to containerize must make all separations when the volume for any presort level meets a required sortation level, as described in 8.5.2 or in the customer/supplier agreement. Full-service mailings containerized under 8.0 or as part of a customer/supplier agreement must have Intelligent Mail container placards (under 708.6.4) on the containers.

23.5 Additional Standards

23.5.1 Induction Data

Mailers presenting mailings under the full-service automation option will receive mail induction information (start-the-clock data corresponding to the date and time when the USPS receives the mailing) at no additional charge.

23.5.2 Address Correction Notices

Mailers presenting mailpieces (except for those noted below) that qualify for the full-service Intelligent Mail option will receive automated address correction notices when the pieces are encoded with Intelligent Mail barcodes with “Address Service Requested” or “Change Service Requested” under standards for OneCode ACS and under the following conditions:

a. Address correction notices will be provided at no additional charge for letters and flats eligible for the full-service option, except for Standard Mail ECR flats, BPM flats dropshipped to DDUs, or BPM carrier route flats.

b. Mailpieces must include the appropriate service type ID in the Intelligent Mail barcode to match the ancillary service requested. See 507.1.5 for mail disposition and address correction combinations by class of mail.

c. A complementary ancillary service request option also must be recorded in the mailer's Address Change Service (ACS) mailer profile. See 507.4.2 for more information about ACS. Address correction notices for mailpieces in full-service mailings are available for:

   1. First-Class Mail letters and flats, provided at no charge (printed endorsement not required for letters).

   2. Periodicals letters and flats, provided at no charge up to 60 days from first notice (printed endorsement not required). See 507.4.1.1 for charges after 60 days.

   3. Standard Mail letters and flats and BPM flats, provided at no charge up to 30 days from first notice. See 507.4.1.1 for charges after 30 days. Standard Mail and BPM pieces must include a printed on-piece endorsement in addition to encoding the ancillary service request into the Intelligent Mail barcode. See 507.4.2 for additional standards.

d. Mailers must use the address correction information provided by the USPS to update their address records in order to receive notices without paying additional fees.

23.5.3 Special Standards—Small Volume Mailings

[1-26-14] For mailings of fewer than 10,000 pieces, when postage is affixed to each piece at the correct price, or each piece is of identical weight and the mailpieces are separated by price, the serial number field of each Intelligent Mail barcode can be populated with a mailing serial number that is unique to the mailing, but common to all pieces in the mailing. This unique mailing serial number must not be reused for a period of 45 days from the date of mailing. These mailings are not required to submit electronic documentation for full-service, only an electronic postage statement. Unique mailing serial numbers must be populated in the Postal Wizard entry screen field or in the electronic documentation.

24.0 Scan Based Payment

24.1 Basic Information

24.1.1 Description

The scan based payment (SBP) program is designed to calculate postage based on sampling, rather than weighing and rating each individual piece. Participation in this program, subject to application and authorization, is available for customers who receive a minimum of 10,000 combined SBP parcel returns to one or more locations. Prices are calculated as follows:

a. Applicants are provided with an initial agreed-upon uniform price per mailpiece, from the published price schedules, through an initial USPS/mailer agreement.

b. Mailpieces are identified by the presence of one or more USPS scan events.

c. Program volume is sampled for each participant and an adjusted average uniform price, from the published price schedules, is developed through revolving 4-week sampling periods. During these sampling periods, postage and fees are assessed based upon the weight and zone of sampled pieces.

d. The participant's initial uniform price, from the published price schedules, is adjusted in accordance with the result of the sampling.

e. A new SBP value is calculated and applied monthly, based on the previous 4 weeks of sampling data. The adjusted uniform price, from the published price schedules, will become effective on the 11th of each month.

f. If there is a general change in the published price schedules, prices under this program will automatically adjust to reflect the new prices.

24.1.2 Eligibility

SBP participation may be authorized for applicants who receive a minimum of 10,000 combined qualifying returns per year to one or more locations. Returns include Ground Return Service, First-Class Package Return Service, Priority Mail Return Service (including Critical Mail), and Parcel Return Service shipments. Only parcels and flat rate parcels and flats may be processed through the SBP program. Participants must pay for postage through a Centralized Account Processing System (CAPS) debit account.

24.2 Authorization

24.2.1 Application

Application for this program is available through the Business Customer Gateway via the *USPS.com* website.

24.2.2 Authorization Period

Authorization remains in effect until the USPS or the customer cancels the agreement. The authorization or agreement may be modified with concurrence by USPS and the mailer.

24.2.3 USPS Suspension

The USPS may suspend an SBP authorization at any time, pending investigation, if the authorization does not provide adequate revenue protection, or the customer (or agent) fails to meet the criteria established by the authorization. The decision to suspend the authorization may be appealed to the vice president, Mail Entry and Payment Technology, within 15 days of the receipt of the notice, by submitting a written appeal with explanation.

24.2.4 Mailer Cancellation

The customer may cancel an SBP authorization by writing to the manager, Business Mailer Support (see 608.8.1). Customers are responsible for payment on all outstanding packages even after cancellation of the SBP agreement.

24.3 Price Adjustment

Each price change will take effect on the 11th of the month. Following a price adjustment, the customer will have ten days to dispute the change in writing to the manager, Business Mailer Support.

25.0 Alaska Bypass Service

25.1 Prices

Alaska Bypass Service prices are calculated based on the zone to which the shipment is addressed and the weight of the shipment. See Notice 123—Price List for prices.

25.2 Price Eligibility

Requirements for Alaska Bypass Service are provided in Handbook PO 508.

705.25.2

705.25.2