604 Postage Payment Methods

Overview

1.0 Stamps
2.0 Stamped Stationery
3.0 Precanceled Stamps
4.0 Postage Meters and PC Postage Products (“Postage Evidencing Systems”)
5.0 Permit Imprint (Indicia)
6.0 Payment of Postage
7.0 Computing Postage
8.0 Insufficient or Omitted Postage
9.0 Refunds and Exchanges
10.0 Revenue Deficiency

1.0 Stamps

1.1 Postage Stamp Denominations

Postage stamps are available in the following denominations:

TYPE AND FORMAT		DENOMINATION
Regular Postage	Panes of up to 100	$0.01, .02, .03, .04, .05, .09, .10, .20, .23, .37, .39, .40, .45, .48, .50, .55, .57, .60, .70, .75, .80, .83, $1, $2, $3.85, $5, $13.65
	Booklets	$0.24 ($2.40 booklet) $0.39 ($3.90 and $7.80 booklets)
	Coils of 100	$.23, .37, .39
	Coils of 500	$0.01, .02, .03, .04, .05, .10, .20 $1
	Coils of 3,000	$0.01, .02, .03, .04, .05, .10, .20, .22, .34, .37, .39
	Coils of 10,000	$0.01, .02, .03, .05, .34, .37, .39
Precanceled Presorted Rate Postage — First-Class Mail and Standard Mail	Coils of 500, 3,000, and 10,000	Various nondenominated (available only to permit holders)
Commemorative	Panes of up to 50	$0.39 and other denominations
	20-Stamp Booklets	$0.39 ($7.80 booklets)
Semipostal	Breast Cancer Research Panes of up to 20	Purchase price of $0.45; postage value equivalent to First-Class Mail nonautomation single-piece rate ($0.39); remainder is contribution to fund breast cancer research.

1.2 Postage Stamps Valid for Use

All postage stamps issued by the United States since 1860, unless listed in 1.3, are valid for postage from any point in the United States or from any other place where U.S. Mail service operates. Precanceled stamps may be used to pay regular postage and fees for extra services if the mailpiece is endorsed under the standards for the class of mail and service requested. Precanceled postage may be used only

by permit holders authorized under 3.0. Unless excepted by standard, the total postage affixed must equal at least the postage charge for the class of the mail and, if applicable, the fee for the extra service requested. All nondenominated postage and makeup rate stamps, including official mail stamps, are valid at the original rates of issue.

1.3 Postage Stamps Invalid for Use

The following are not valid to pay postage for U.S. domestic or U.S.-originated international mail:

a. Postage due, special delivery, special handling, and Certified Mail stamps.

b. Stamps of other countries.

c. United Nations stamps, unless on mail deposited at the United Nations, NY.

d. U.S. stamps that are mutilated or defaced; cut from stamped envelopes, aerogrammes, or stamped cards; covered or coated in such a manner that canceling or defacing marks cannot be printed onto the stamps; or overprinted with an unauthorized design, message, or other marking.

e. Nonpostage stamps, such as migratory-bird hunting and conservation stamps, U.S. saving and thrift stamps.

1.4 Imitations of Stamps

Matter bearing imitations of postage stamps, in adhesive or printed form, or private seals or stickers resembling a postage stamp in form and design, is not acceptable for mailing.

1.5 Imitations of Markings

Matter bearing decorative markings and designs, in adhesive or printed form, resembling the markings and designs of official postal services, is not accepted for mailing (see Exhibit 1.5).

Exhibit 1.5 Prohibited Imitations

1.6 Stamp Reproduction

Postmasters may not advise the public about the reproduction of foreign or domestic postage stamps. Such information is available from Stamp Development, USPS Headquarters (see 608.8.0 for address).

1.7 Position of Stamp on Mailpiece

Stamps must be affixed firmly in the upper right corner of the address side of the mail cover. Any stamp partly concealed by an overlapping stamp may not be counted as postage.

1.8 Reuse of Stamps

Reuse of stamps with intent to cause loss to the government or the USPS is punishable by fine and imprisonment.

1.9 Perforating Stamps

Postage stamps may be marked with perforation holes. The mark may not cover more than 1/4 square inch (1/2 inch by 1/2 inch) of the stamp, and the diameter of the holes may not exceed 1/32 inch.

1.10 Special Standards for Semipostal Stamps

Semipostal stamps are subject to the following special conditions:

a. Semipostal stamps are stamps sold for a price that exceeds the postage value of the stamp. The difference between the price and postage value (also known as the "differential") less an offset for reasonable USPS costs, as determined by the USPS, is contributed to a specific cause. Semipostal stamps are offered for sale for a limited time as provided by law or by the USPS.

b. The following semipostal stamp is available: The Breast Cancer Research semipostal stamp. The difference between the purchase price and the First-Class Mail nonautomation single-piece first-ounce letter rate in effect at the time of purchase constitutes a contribution to breast cancer research and cannot be used to pay postage. Funds (net of reasonable USPS costs) raised in connection with the Breast Cancer Research semipostal stamp are transferred to the Department of Defense and the National Institutes of Health.

c. The postage value of each semipostal stamp is the First-Class Mail nonautomation single-piece first-ounce letter rate in 133.1.5, *Rates for Letters, Flats, and Parcels*, that is in effect at the time of purchase. Additional postage must be affixed to pieces weighing in excess of 1 ounce, pieces subject to the nonmachinable surcharge, or pieces for which extra services have been elected. The postage value of semipostal stamps purchased before any subsequent change in the First-Class Mail nonautomation single-piece first-ounce letter rate is unaffected by any subsequent change in that rate. The purchase price is listed in 1.1.

1.11 Paying for Stamps

Payment may be made in U.S. currency. Foreign or mutilated money is not acceptable. The USPS may require payment of the exact amount of the purchase. Checks are acceptable subject to USPS check-acceptance policy and the assessment of charges to the customer for an uncollectible check returned by the bank. The customer must use a money order or certified check if the amount due is sent by mail.

1.12 Seals and Stickers

The nonaddress side of mail may have seals or stickers, if they do not imitate postage stamps and do not have words, numerals, or other markings indicating a value.

2.0 Stamped Stationery

2.1 Plain Stamped Envelope

2.1.1 Fee

Fee, in addition to the postage value preprinted on the envelope:

TYPE	FEE	
	Each	500
Size 6-3/4	$0.08	$13.00
Size 10	0.08	15.00

2.1.2 Availability

Plain stamped envelopes are available at all post offices, except that:

a. Only sizes 6-3/4 and 10 regular and window envelopes are sold in less than full box lots (a full box contains 500 envelopes).

b. Only nonprofit organizations and political committees authorized to use the Nonprofit Standard Mail rates may buy Nonprofit (precanceled) envelopes. Only full boxes are sold at post offices; only less than box lots are sold at philatelic outlets.

2.1.3 Envelope Dimensions

Envelope dimensions, which can vary 1/16 inch, are as follows:

a. Size 6-3/4: 3-5/8 by 6-1/2 inches.

b. Size 10: 4-1/8 by 9-1/2 inches.

c. Intermediate sizes (between 6-3/4 and 10, as determined by surface area in square inches) are not less than 6-1/2 or more than 9-1/2 inches long, not less than 3-5/8 or more than 5 inches high, have a surface area of not more than 39 square inches, and have an aspect ratio (length divided by height) not less than 1.3 or more than 2.5.

2.1.4 Window Sizes

Window envelopes are available with these window sizes:

a. The standard window is 1-1/8 inches high and 4-3/4 inches wide, and is placed 5/8 inch from the bottom edge of the envelope.

b. In size 6-3/4 envelopes, the window is 7/8 inch from the left edge; in size 10 envelopes, 1 inch from the left edge.

c. On double window envelopes, the second window (designed for a return address) is 1/2 inch from the top and left edges, and measures 3/4 inch high and 2-1/2 inches wide.

d. Other window sizes and locations can be produced, if the window size is not more than 1-1/2 inches high and 5 inches wide, and the window is not less than 3/8 inch from any envelope edge. Windows must allow compliance with general USPS addressing guidelines.

2.1.5 Imprinting

Stamped envelopes may be privately imprinted in any style, if at least 3-1/2 inches of clear space remains at the right end of the address side.

2.2 Personalized Stamped Envelopes

2.2.1 Fee

Fee, in addition to the postage value preprinted on the envelope:

TYPE	FEE	
	50	500
Size 6-3/4	$3.75	$18.00
Size 10	3.75	21.00

2.2.2 Availability

Personalized envelopes (stamped envelopes imprinted with a return address) are available by mail order only. Customers mail Form 3203, with the full payment (by check or money order) for the envelopes ordered, to Stamp Fulfillment Services (see 608.8.0 for address).

2.2.3 Printing Specifications

All printing on personalized envelopes is subject to these specifications:

a. Any line of printing is limited to 47 characters and spaces.

b. The total number of lines is limited to seven.

c. The last two lines of printing must be reserved for the street address or post office box number where mail is to be delivered, and the city, state, and ZIP Code.

d. Stamp Development, USPS Headquarters, must approve any printing not permitted under 2.2.4 through 2.2.6. Requests for nonstandard printing are considered on orders of one million or more identical envelopes. Stamp Development's decision is final.

e. Each envelope must bear a return address printed in uppercase and lowercase letters, with flush left margin, using 8-point Helvetica type. The firm name or main lines are in bold type.

2.2.4 Printed Return Address Standards

The printed return address must include the local address that includes a street address; a post office box number; a rural route and box number; a building name, room number, and street address; or both a street address and post office box number; and the name of the post office or branch post office, state, and either the ZIP+4 or the 5-digit ZIP Code. The ZIP Code must be correct for the address on the line immediately preceding the city and state. The postmaster determines whether the address is adequate to ensure return of undeliverable mail.

2.2.5 Printed Return Address Options

The printed return address may include:

a. The name and title of an individual, or the name of a firm, corporation, institution, association, or society.

b. Descriptive words that represent business or professional names.

c. The branch or department name of a business if necessary to ensure return of undeliverable mail.

d. The telephone number of an individual or group if printed immediately preceding the local address.

e. A brief advertising statement or descriptive phrase following the name or on up to two separate lines. Indecent matter may not appear on wrappers or envelopes (18 USC 1463).

2.2.6 Optional Information

The following endorsements and instructions printed in at least 8-point type may be included as part of the return address:

a. Any ancillary service endorsement under 507.1.1 through 507.1.9 that requests address correction, forwarding, or return appropriate for the intended class of mail (e.g., "Address Service Requested"). The endorsement must appear directly below the return address, separated with a minimum clear space of 1/4 inch.

b. Any sender instruction under 507.1.8, *Returning Mail*, and 507.3.0, *Address Correction Services*, that specifies a period for holding mail, not fewer than 3 and not more than 30 days (e.g., "AFTER 5 days RETURN TO"). The instruction must appear directly above the return address. If such an instruction is printed on envelopes at Standard Mail rates, those envelopes must also bear an authorized ancillary service endorsement that provides for return postage.

2.2.7 Rejected Envelopes

A customer may reject personalized envelope orders for defective manufacture or mistakes in printing, denomination, size, etc.:

a. If the purchaser's error, only the value of the postage is refunded. Such a refund may be made at a post office or by returning the envelopes to Stamp Fulfillment Services (see 608.8.0 for address). If the customer wants the envelopes replaced instead, the customer must pay the difference between the full selling price of the envelopes and the postage value. The customer must include an explanation for rejecting the envelopes in a request for replacement or refund.

b. If an error is made by the USPS, Stamp Fulfillment Services refunds the total cost of the envelopes. The envelopes must be returned to Stamp Fulfillment Services (see 608.8.0 for address) with an explanation of the error. Only the customer whose name is in the return address, or the customer's representative, may submit rejected personalized envelopes for a refund. Rather than seeking a refund, the customer may request that the envelopes be replaced.

2.3 Other Stationery

2.3.1 Stamped Cards

Stamped cards are available as single stamped cards, double (reply) stamped cards, and in sheets of 40 for customer imprinting. Single and double stamped cards are 3-1/2 inches high by 5-1/2 inches long. Sheets must be cut to this size so that the stamp is in the upper right corner of each card. The USPS does not offer personalized stamped cards (cards imprinted with a return address).

2.3.2 Fee for Stamped Cards

Fee, in addition to the postage value preprinted on the card:

TYPE	FEE
Single Card	$0.02
Double Card	0.04
Sheet of 40 cards (uncut)	0.80

2.3.3 Aerogramme

Aerogrammes (airletter sheets) are available for use in international mail.

2.3.4 Validity of Postal Stationery

All stamped envelopes, stamped cards (formerly called postal cards), and aerogrammes issued by the United States since 1873 are valid for postage from any point in the United States or from any other place where U.S. domestic mail service operates, under the same conditions as for postage stamps in 1.0.

3.0 Precanceled Stamps

3.1 General Information

3.1.1 Definition

Precanceling is the cancellation of adhesive postage stamps, stamped envelopes, or stamped cards before mailing. Precanceling may be done by the USPS or by the mailer under a postal permit. Precanceled commemorative stamps are not available.

3.1.2 Use of Precanceled Stamps

Precanceled postage is an optional postage payment method for mailings at Presorted and automation First-Class Mail rates and at all Standard Mail rates.

3.1.3 Prohibited Use of Precanceled Stamps

Precanceled postage stamps may not be used on any reusable mailing containers, such as boxes, cases, or bags.

3.1.4 Documentation

Unless excepted by standard, a precanceled stamp mailing must be accompanied by documentation subject to the standards for documentation for each class of mail if the mailing contains nonidentical-weight pieces or pieces without the full postage at the applicable rate.

3.1.5 Amount of Postage

The value of precanceled stamps affixed to each piece in a mailing must be either the exact amount due or another amount permitted by standard. Refunds for overpayment must meet the standards in 9.0, *Refunds and Exchanges*.

3.1.6 Depositing Precanceled Stamp Mailings

Mail bearing precanceled postage must be presented to the post office where the permit is held, at the times and places designated by the postmaster. Mail bearing precanceled postage must not be deposited in street collection boxes.

3.1.7 Combining Precanceled Stamps With Other Postage Payment Methods

Precanceled mail may be combined in a mailing with mail paid with other means only if authorized by the USPS.

3.1.8 Return Address

Mailpieces with any precanceled imprint must have a complete domestic return address. If the return address is outside the delivery area of the post office of mailing, the mailer must put a cancellation endorsement to the left of the postage showing city, two-letter state abbreviation, and ZIP Code of the office of mailing; or submit, at the time of mailing, a duplicate of the postage statement and a sample mailpiece, both in an envelope stamped and addressed to the postmaster at the post office shown in the return address; or use the cancellation endorsement "Mailed From ZIP Code" followed by the 5-digit ZIP Code assigned to the postmaster at the office of mailing.

3.1.9 Markings and Endorsements

Whether the mailer or the USPS precanceled the stamps, each mailpiece with precanceled postage must bear markings and endorsements required for the rate claimed or services requested.

3.2 Permit to Use Precanceled Stamps

3.2.1 Authorization to Use Precanceled Stamps

A mailer who wants to use USPS-precanceled stamps and stamped envelopes must complete Form 3615 and file it at the post office where mailings are to be deposited. If an applicant has a completed Form 3615 on file for other services, precanceled authorization is annotated on the existing application. There is no fee for this permit.

3.2.2 Revocation of Precanceled Stamp Permit

A permit may be revoked if used in operating any unlawful scheme or enterprise, or for buying or acquiring stamps or mailer's precancel postmarks for other than mailing, or for failing to comply with the format requirement or instructions on Form 3615. The permit holder has 10 days to file a written statement showing why the permit should not be revoked. The manager, customer service support (district), issues the decision on such appeals.

3.3 Precancellation of Stamps by USPS

3.3.1 Stamps Precanceled by USPS

Stamps ordered with a precancel imprint have one visible line across their faces. Endorsement stamps precanceled by post offices have two visible parallel lines across the face of each stamp between which the name of the post office of mailing and its two-letter state abbreviation appear.

3.3.2 Using Precanceled Stamps With Rate Designation

Precanceled stamps can be ordered with the rate category preprinted as the precancellation device. These stamps are for matter mailed as part of a qualifying mailing of the rate category shown on the stamps. Mailpieces bearing a rate category precancellation legend must include the return address. If the return address is not within the delivery area of the post office of mailing, the mailer must place a cancellation endorsement on the piece or provide information to the post office shown in the return address. Precanceled stamps with a preprinted rate marking may be used to pay single-piece postage if the piece bearing the stamps has the correct marking (e.g., “First-Class Mail”) immediately under the postage.

3.4 Precancellation of Stamps by Mailer

3.4.1 Definition of Stamps Precanceled by Mailer

A mailer meeting the standards in 3.4 may precancel adhesive stamps, stamped cards, and stamped envelopes with a mailer’s precancel postmark. Stamped cards are precanceled at the time of printing and do not require a mailer’s precancel postmark.

3.4.2 Authorization to Precancel Stamps

A mailer must request authorization to preprint rate markings on precanceled stamps or to use a precancel postmark on adhesive stamps, stamped cards, and stamped envelopes. The applicant must submit a specimen mailpiece showing the preprinting method or proposed precancel postmark. If more than one preprinted marking is prepared or more than one format is used, a specimen for each must be submitted. Form 3615 must be endorsed “Preprinting of Rate Markings,” or “Mailer’s Precancel Postmark,” or both, as appropriate. The application and format samples must be submitted to the postmaster of the office where the precanceled mailings are to be deposited for approval by the district Business Mail Entry manager. If the application and samples are approved, the applicant receives written notice of approval from the postmaster and a unique permit number assigned by the postmaster.

3.4.3 Authorization Conditions

Mailer precancellation is authorized only for the specimen mailpieces submitted and approved. After that, a specimen must be submitted and approved for each new precancel postmark format or preprinted marking to be used.

3.4.4 Denial of Authorization to Precancel Stamps

If the application and format samples are not approved by the district Business Mail Entry manager, the applicant receives written notice from the postmaster stating the reasons for the denial and the applicant's appeal rights. The applicant may file a written appeal with the Pricing and Classification Service Center (PCSC). (See 608.8.4, *PCSC and District Business Mail Entry Offices Contact Information*.)

3.4.5 Revocation of Authorization to Precancel Stamps

A permit may be revoked for operating any unlawful scheme or enterprise, for buying or acquiring stamps for other than mailing, or for failing to comply with the required format standards. Within 10 days of receipt of the revocation notice, the permit holder may file a written appeal with the PCSC. (See 608.8.4, *PCSC and District Business Mail Entry Offices Contact Information*.) The PCSC issues the final agency decision.

3.4.6 Design and Content of Mailer's Postmark

The mailer's precancel postmark must contain specific elements:

a. The mailing date (day, month, and year) if used on First-Class Mail; the month and year of mailing may be shown on Standard Mail.

b. The words "Mailer's Postmark" followed by the permit number and enough lines to deface (cancel) the postage.

c. Either the city, state, and 5-digit ZIP Code of the post office where the precancel permit is held and the mailing is to be deposited, or the words "Mailed From ZIP Code" followed by the 5-digit ZIP Code of the mailing office. (If that post office is assigned more than one 5-digit ZIP Code, the precancel postmark must show the 5-digit ZIP Code assigned to the postmaster.)

3.4.7 Rate Marking

The precancel postmark may include the words or authorized abbreviations of the rate marking required for the rate claimed. Alternatively, if authorized under 3.4.2, the mailer may preprint rate markings required by other standards on adhesive stamps to be used for mailings at the corresponding rates. Such preprinted markings must be in uppercase letters of at least 6-point type, printed in black indelible ink on the stamp where optimum contrast is possible. A preprinted rate marking applied by the mailer, by itself or with a precancel postmark, must not obscure other printing on the stamp that is part of the USPS design (e.g., "USA").

3.4.8 Cancellation of Stamps

Black ink must be used for cancellation. It must provide enough indelibility and contrast to prevent reuse of the stamps. The precancel permit number must not be obscured by the cancellation.

3.4.9 Required Format

A mailer must use one of the Format A designs in Exhibit 3.4.9. Format B may be used only by a mailer previously authorized to do so and who has the necessary die. The only permissible alternative or modification to any format is the addition of a rate marking permitted by 3.4.7.

Exhibit 3.4.9 Format for Mailer's Precancel Postmarks

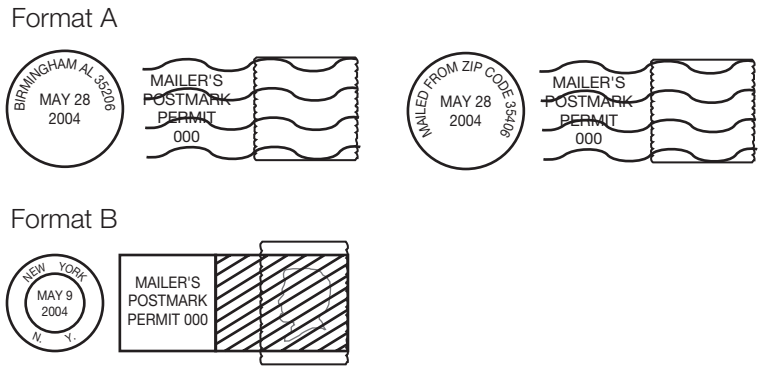

3.5 Stamp Collectors

Subject to USPS policy in 608.4.0, precanceled postage may be bought for philatelic purposes as well as postage payment. A stamp collector may mail matter bearing precanceled postage if the collector has a permit to use precanceled postage at the post office where the mail is presented. Creating philatelic oddities or precanceling issues or denominations that would not otherwise see legitimate mail use is not permitted. Mail orders must include a stamped, self-addressed envelope.

3.6 Using High Value Stamps

If precanceled postage on a single piece is more than $1, the precanceled stamps must be overprinted or handstamped in black ink with the mailer's initials and the numerical abbreviations of the month and year for use (e.g., "A. B. Co. 9-78"). These stamps are acceptable on mail during the month shown and through the 10th of the following month.

4.0 Postage Meters and PC Postage Products ("Postage Evidencing Systems")

4.1 Basic Information

4.1.1 Definitions

Postage meters and PC Postage products are collectively identified as "postage evidencing systems." A postage evidencing system is a device or system of components a customer uses to print evidence that postage required for mailing has been paid. Postage evidencing systems print indicia, such as meter imprints or information-based indicia (IBI), to indicate postage payment. Mailers print indicia directly on a mailpiece or on a label that is affixed to a mailpiece. Mailers must place indicia in the upper-right corner of the mailpiece or label, according to 4.3.3.

4.1.2 Product Categories

Product categories include postage meters and PC Postage products. Additional information on product categories and authorized providers is available online at www.usps.com/postagesolutions. The primary characteristics of postage meters and PC Postage products are described below.

a. Postage meters are devices that allow download, storage, and accounting of postage in the device. Meters print indicia that may be IBI or non-IBI, to indicate postage payment. IBI are digitally generated indicia that include a two-dimensional barcode. Postage meters are available only through authorized providers. Meters may only be leased or rented and may not be sold or resold. Some components of metering systems may be purchased as authorized by the USPS.

b. PC Postage products are software-based solutions for managing postage accounts. Mailers purchase postage using a computer and print indicia using desktop or label printers. PC Postage products print IBI indicating postage payment and may print directly onto mailpieces, shipping labels, and USPS-approved customized labels. PC Postage products are offered by commercial providers approved by the USPS. PC Postage products are typically offered by providers through subscription service agreements. Some components of PC Postage systems may be purchased as authorized by the USPS.

c. PC Postage technology also enables authorized postage payment for Internet-based services operated by authorized private vendors as well as Click-N-Ship, a shipping label option available at www.usps.com.

4.1.3 Authorized Meter Providers

The following providers are authorized:

FRANCOTYP-POSTALIA INC
140 N MITCHELL CT STE 200
ADDISON IL 60101-5629
800-341-6052
www.fpusa.net

HASLER INC
19 FOREST PKY
SHELTON CT 06484-6140
800-243-6275
www.haslerinc.com

NEOPOST INC
30955 HUNTWOOD AVE
HAYWARD CA 94544-7084
800-624-7892
www.neopostinc.com

PITNEY BOWES INC
1 ELMCROFT RD
STAMFORD CT 06926-0700
800-322-8000
www.pitneybowes.com

4.1.4 Authorized PC Postage Providers

The following providers are authorized:

ENDICIA.COM (PSI SYSTEMS INC)
247 HIGH ST
PALO ALTO CA 94301-1099
800-576-3279 x140
www.endicia.com

PITNEY BOWES INC
1 ELMCROFT RD
STAMFORD CT 06926-0700
800-322-8000
www.pitneybowes.com

STAMPS.COM
12959 CORAL TREE PLACE
LOS ANGELES CA 90066-7020
888-434-0055
www.stamps.com

4.1.5 Authorized Classes of Mail

Mailers may use postage evidencing systems to affix or imprint indicia on any class of mail except Periodicals.

4.2 Authorization to Use Postage Evidencing Systems

4.2.1 Customer Agreement

Customers must enter into an agreement with the USPS for authorization to use postage evidencing systems. By entering into the agreement, the customer accepts responsibility for control and use of the system and agrees to abide by all rules and regulations governing its use. The following conditions apply to these agreements.

a. Customers enter into an agreement with the USPS (e.g., via electronic click-through or contract signature) in conjunction with executing a separate agreement with the provider for rental, lease, or use of a postage evidencing system. Actual implementation of the agreement with the USPS varies by product category and provider and is typically facilitated by the provider on behalf of the USPS. Postage evidencing systems are rented or leased. They may not be purchased, sold, or resold.

b. A meter lease or rental agreement with an authorized provider is required for postage meter use. Registration with an authorized provider is required for PC Postage system use.

c. The customer must provide updated address information to the provider in the event of relocation.

d. Postage meter manufacturers must conduct inspection of certain meters on a scheduled basis. The customer agrees to make the meter available for provider inspection or USPS examination when required.

e. The customer agrees to promptly report a defective meter, or loss or theft of a meter, to the provider.

4.2.2 Authorized Possession

Only authorized customers may possess or use postage evidencing systems. Customers must surrender postage evidencing systems to the provider or its agent upon termination of the lease or rental agreement or device malfunction.

4.2.3 Use Outside the United States

The manager of Postage Technology Management must give specific approval to the provider before a provider may place a postage evidencing system for use outside the customs territory of the United States.

4.2.4 Denial of Use

USPS may deny use of a postage evidencing system in the event of failure to comply with rules and regulations. The customer must make the postage evidencing system and transaction records available and surrender the system to the provider, the USPS, or its agent when notified to do so.

4.2.5 Appeal Process

Appeals regarding standards in this section or regarding decisions on the basis of noncompliance must be made in writing to the manager, Postage Technology Management (see 608.8.1 for address).

4.3 Postage Payment

4.3.1 Paying for Postage

The value of the indicia on each mailpiece must be the exact amount due for the applicable rate category and associated criteria such as weight, shape, and zone or another amount permitted by mailing standards to qualify for worksharing or volume discounts. Payment options vary by provider and product category. Contact provider for authorized USPS payment options.

4.3.2 Legibility of Postage

Postage indicia must be legible (readable by USPS personnel and mail processing equipment). Illegible or unreadable (unscannable) indicia are not acceptable as payment of postage. Reflectance measurements of the indicia and the background material must meet the standards in 708.4.0.

4.3.3 Placement of Postage

[9-28-06] Mailers must print or apply indicia in the upper-right corner of the envelope or address label. Mailers must meet the following additional standards when placing indicia on mailpieces.

a. Position indicia at least 1/4 inch from the right edge of the mailpiece and 1/4 inch from the top edge of the mailpiece.

b. Position indicia within the required boundaries. The boundaries of indicia are defined by the right edge of the envelope, the top edge of the envelope, and the bottom edge and the left edge of any USPS-required indicium element printed by the postage evidencing system.

c. Maintain the required 1/2-inch clear zone to the left of and below all elements of the indicium, within which nothing must be printed or placed, except as follows:

   1. Indicia containing images obtained from a USPS-approved licensed vendor of customized PC Postage.

   2. For letterpress indicia only, advertising material may be printed with the indicia within space limitations. These advertising messages and slogans are known as “ad plates.” Customers must obtain the ad plates from their authorized postage meter provider. Ad plate messages must be distinguished by the inclusion of the name of the mailer or words such as “Mailer's Message.”

d. For postage evidencing systems that print digital indicia, an approved indicium must include within its boundaries only postal markings and text required or recommended by the USPS, except that the indicium may identify the provider. Other material may be printed only outside the boundaries of the clear zone identified in 4.3.3c.

e. Any additional material printed by a postage evidencing system under 4.3.3c and 4.3.3d must comply with the following requirements:

   1. The material must be consistent with the Postal Service's intent to maintain neutrality on religious, social, political, legal, moral, or other public issues.

   2. The material must not be obscene, deceptive, or defamatory of any person, entity, or group and must not advocate unlawful action.

   3. The material must not emulate any form of valid postage, government, or other official indicia or payment of postage.

   4. The material must not harm the public image, reputation, or goodwill of the Postal Service and must not be otherwise derogatory or detrimental to the Postal Service’s interest.

f. Do not allow the indicia to infringe on the areas reserved for the FIM, POSTNET barcode, or optical character reader (OCR) clear zone.

g. Orient indicia with the longest dimension parallel to the address.

h. When a FIM is printed with the indicia, position the FIM according to standards in 708.9.0.

i. When placing multiple indicia on an envelope (e.g., for redate or postage correction) the indicia must not overlap each other. Overlapping indicia are not acceptable as payment of postage.

4.3.4 Postal Markings

Indicia are comprised of human-readable information. Information-based indicia (IBI) also contain machine-readable information that identifies the postage evidencing system, postage payment information, and mail service requested. There are

particular data sets associated with different types of indicia, depending on the product and the type of mailing. Indicia may include postal markings related to the class of mail and presort level and an ancillary service endorsement. All words must be legible and in bold capital letters at least 1/4 inch high or 18-point type. See 202.3.0 for standards on markings and 202.4.0 for placing ancillary service endorsements on letter-size mailpieces. See 302.2.0 and 302.3.0 for corresponding standards for flat-size mailpieces; see 402.2.0 and 402.3.0 for parcels.

4.3.5 Refund Procedures

Refund procedures for unused printed postage, postage purchased but not printed, and postage lost due to postage evidencing system failure varies by product category. See 9.0 for refund procedures.

4.4 Special Indicia

4.4.1 Date and Postage Corrections

Mailers may print a date correction or additional postage indicium directly on the mailpiece or on a USPS-approved label under the following conditions.

a. A date correction indicium is required for any mailpiece not deposited by the date of mailing in the indicium. Only one date correction indicium is permitted on a mailpiece.

b. Indicia for additional postage on shortpaid mailpieces must equal the total amount of required postage.

4.4.2 Reply Postage

Mailers may use indicia generated by any postage evidencing system to prepay reply postage on Express Mail, on Priority Mail when the rate is the same for all zones, on First-Class Mail, and on single-piece rate Media Mail and Library Mail under the following conditions.

a. The postage amount must be sufficient to prepay the full postage due.

b. Print indicia directly on the mailpiece or on a label, and place indicia under 4.3.3.

c. Indicia used to prepay reply postage must not show the date.

d. Pre-address the mailpiece for return to the authorized user only.

e. Print the words "NO POSTAGE STAMP NECESSARY POSTAGE HAS BEEN PREPAID BY" directly above the address.

f. Mailers may use FIM A on barcoded letter-size First-Class Mail reply mail except when using PC Postage.

g. When using PC Postage, mailers must use FIM D for prepaid reply mail when the indicium is printed directly on the mailpiece.

h. The address side must appear as described in this section and shown in the illustration below. Nothing may be added except a return address, FIM, or barcode.

4.5 Mailings

4.5.1 Mailing Date Format

The mailing date in meter indicia must meet the format standards in this section. The year must be represented by all four digits or by the last two digits. Mailers may print the indicia directly onto mailpieces or onto separate labels or tape affixed to mailpieces. The mailing date format used in the indicia is also subject to the following conditions.

a. Complete Date. Mailers must use a complete date for the following:

1. All First-Class Mail, Priority Mail, and Express Mail pieces.
2. All mailpieces with Insured Mail, COD, or Special Handling service.
3. All mailpieces prepared with the indicia printed on nonadhesive paper (e.g., computer printer paper) and affixed to the mailpiece or used as part of an insert in a window envelope.

b. Month and Year. Mailers may use a complete date or a mailing date consisting solely of the month and year in the indicia only for Standard Mail and Package Services pieces.

c. No Date. Mailers must use indicia with no mailing date for prepaid metered reply postage. As an option, mailers may use indicia with no mailing date for Standard Mail and Package Services pieces not subject to 4.5.2a.

4.5.2 Mailing Date Accuracy and Mailing Periods

The date or period when mailers may deposit or present metered mail for mailing is controlled by the mailing date in the indicia under the following conditions.

a. Complete Date. Mailpieces bearing a complete date in the indicia must be deposited or presented on that date, except that pieces entered after the day's last scheduled collection from the post office or collection box may bear the actual date of entry or the date of the next scheduled collection from the post office or collection box. When authorized by USPS, presort mail accepted after midnight may bear the previous day's date. If the mailer knows that the mail is not to be deposited or presented on the date in the indicia, the mailer must use a date correction indicium under 4.4.1.

b. Month and Year. Mailpieces bearing only the month and year in the indicia may be deposited or presented for mailing on any day during the month shown in the indicia and through the third day of the following month.

c. No Date. Mailpieces bearing no date in the indicia may be deposited or presented for mailing on any date.

4.5.3 Deposit of Mail

Mailers must deposit or enter mailpieces with metered or PC Postage indicia according to the following conditions.

a. Mailers may deposit Express Mail, Priority Mail, single-piece rate First-Class Mail, single-piece rate Media Mail, and single-piece rate Library Mail items with metered or PC Postage indicia at any postal facility, preferably within the area of the customer's local post office.

b. Mailers must deposit all mail not specified in 4.5.3a as follows:

   1. At a postal facility within the ZIP Code shown in the indicia.

   2. For Presort rate mail, at the authorized mailing office if not at a facility within the ZIP Code shown in the indicia.

c. Mailers also may dropship metered mail according to standards in 705.18.0.

4.6 Authorization to Produce and Distribute Postage Evidencing Systems

Title 39, Code of Federal Regulations, part 501, contains information concerning authorization to produce and distribute postage evidencing systems. Additional information may be obtained from the manager, Postage Technology Management (see 608.8.1 for address).

5.0 Permit Imprint (Indicia)

5.1 General Standards

5.1.1 Definition

A mailer may be authorized to mail material without affixing postage when payment is made at the time of mailing from a permit imprint advance deposit account established with the USPS for that purpose. This payment method may be used for postage and extra service fees for First-Class Mail, Standard Mail, and Package Services. This method is not available for Periodicals or Express Mail and must not be used to pay postage on any mailpiece that is designed for reply purposes.

5.1.2 Minimum Volume

Permit imprint mailings must contain at least 200 pieces or 50 pounds, except:

a. Other higher minimum quantities may apply, depending on the rate claimed.

b. An occasional First-Class mailing may contain fewer than 200 pieces if from a mailer whose total daily mailings are not much more than 200 pieces but who, to cooperate with the post office, presents a part of that mail early in the day.

c. A mailing may contain fewer than 200 pieces if it is the completion of a large mailing extending over 2 or more consecutive days and the mailer includes an explanation on the accompanying postage statement.

d. Single-piece rate mailings submitted under the terms of an approved manifest mailing system agreement with a minimum volume reduction provision.

5.1.3 Use of Permit Imprint

Each mailpiece sent under this payment method must bear a permit imprint indicia showing that postage is paid. Permit imprint indicia may be printed directly on mailpieces, on labels (including address labels) permanently affixed to mailpieces, or on mailpiece wrappers, envelopes, and other containers. Except where the enclosure is prohibited by other standards, matter bearing a permit imprint indicia may be mailed as an enclosure when postage for the enclosure or the host matter is not paid with the enclosed permit imprint, and the enclosed permit imprint indicia is not visible when the matter is mailed.

5.1.4 Permit and Fees

A mailer may obtain a permit to use a permit imprint indicia and pay postage in cash before or at the time of mailing by submitting Form 3615 and the applicable fee to the post office where mailings are made. There is no other fee for the use of a permit imprint indicia as long as the permit remains active, but other fees (e.g., an annual presort mailing fee) may be due depending on the class of mail to be prepared.

5.1.5 Application Fee

Application fee: $160.00.

5.1.6 Payment of Permit Imprint Postage

Payment must be made for each mailing, either in cash or through an advance deposit account, before the mailing can be released for processing. Funds to pay postage must be deposited as directed by the USPS. If the funds paid or on deposit are less than that necessary to pay for a mailing, the difference must be paid or deposited before the mailing or other permit imprint mailings can be accepted. Credit for postage is not allowed. Postage may not be paid partly in money and partly by postage stamps unless permitted by standard.

5.1.7 Preparation of Mailing

All pieces in a permit imprint mailing must be faced (positioned with all addresses in the same direction, unless counterstacked under the applicable standards) and meet the preparation standards for the rate claimed. Mail claimed at a postage rate that varies by zone must be separated by zone when mailed, unless otherwise authorized by the USPS.

5.1.8 Weight Standards for Permit Imprint Mailing
All pieces in a permit imprint mailing must be of identical weight unless otherwise authorized by the USPS.

5.1.9 Combining Permit Imprint Mailings With Other Payment Methods
Mailpieces paid with permit imprint may be combined in the same mailing with pieces paid with other methods only if authorized by the USPS.

5.1.10 Presenting Mailings to be Weighed
Permit imprint mailings with postage paid by advance deposit account must be presented to the USPS for weighing, unless otherwise authorized by Business Mailer Support, USPS Headquarters.

5.1.11 Depositing Permit Imprint Mailings
Mail must be deposited and accepted at the post office that issued the permit, at a time and place designated by the postmaster, except as otherwise provided for plant-verified drop shipments.

5.2 Suspension and Revocation

5.2.1 Suspension of Authorization
The USPS may immediately suspend the authorization to use a permit imprint if the permit holder or its agent refuses or fails to provide information in a timely manner (as specified in 604.5.3.9) to the USPS about the use of its company permit.

5.2.2 Revocation of Permit
A permit may be revoked for use in operating any unlawful scheme or enterprise, for nonuse during any 2-year period, for refusal to provide information about permit imprint use or mailings, or for noncompliance with any standard applicable to permit imprints. The permit holder may make a written appeal to the postmaster within 10 days of receipt of the notice.

5.3 Indicia Design, Placement, and Content

5.3.1 Production
Embossed or unembossed permit imprint indicia may be made by printing press, hand stamp, lithography, mimeograph, multigraph, address plate, or similar device. They may not be typewritten or hand-drawn.

5.3.2 Permit Imprint Indicia Content and Format
The content and format of a permit imprint indicia must meet the standards below. No other formats may be used.

5.3.3 Indicia Legibility and Color
The permit imprint indicia must be legible and of a color that contrasts sufficiently with the paper and the indicia's background for readability. A different color may be used to highlight the background of an indicia.

5.3.4 Indicia Placement on Mailpiece
Permit imprint indicia must be aligned parallel with the address of the mailpiece. The indicia must not encroach on reserved space (e.g., ACS participant code, delivery point barcode) if such a standard applies and can be placed in one of these four positions:

a. Upper right corner of the mailpiece.

b. Upper right corner of the address area.

c. To the right of the address on an address label.

d. To the right of the address on an insert appearing through a window envelope.

5.3.5 Marking Expedited Handling on Standard Mail

Except for postcard-size mail and permit imprint indicia placed on address labels, indicia on Standard Mail pieces bearing references to expedited handling or delivery (e.g., "Priority," "Express," "Overnight") must:

a. Show the words "Presorted Standard" (or "PRSRT STD") or "Nonprofit Organization" (or "Nonprofit Org." or "Nonprofit") more prominently than other words in the indicia.

b. Include a clear space of at least 3/8 inch around the entire indicia.

5.3.6 First-Class Mail and Priority Mail Format

[1-4-07] A permit imprint indicia on First-Class Mail or Priority Mail must show "First-Class Mail" or "Priority Mail" (or "Priority"), as applicable; "U.S. Postage Paid"; city and state; and permit number. If the Electronic Verification System (eVS) is used under 705.2.9, the marking "eVS" (or the alternative "e-VS" or "E-VS") must appear directly below the permit number. The "Priority Mail" (or "Priority") marking may be omitted when using USPS-provided Priority Mail envelopes and containers. The indicia may show the mailing date, amount of postage paid, or the number of ounces for which postage is paid. The ZIP Code of the permit holder may be shown directly after the state name or in a separate inscription reading "ZIP Code 00000," when that ZIP Code does not create uncertainty about the permit holder's correct address or permit number. Instead of printing the city and state of mailing in the indicia, the mailer may print "Mailed From ZIP Code," followed by the 5-digit ZIP Code assigned to the postmaster of the mailing office. The indicia may also include required rate markings.

5.3.7 Standard Mail and Package Services Format

[1-4-07] A Standard Mail or Package Services permit imprint indicia must contain the same information required in 5.3.6 for a First-Class Mail indicia, except "First-Class Mail" or "Priority Mail" (or "Priority") must be omitted. If eVS is used under 705.2.9, the marking "eVS" (or alternative "e-VS" or "E-VS") must appear directly below the permit number. The indicia may include the amount of postage paid, the weight of the piece, and rate markings as required. The indicia must not include the mailing date.

5.3.8 Indicating Extra Services

Permit imprint mail with extra services also paid with a permit must show "First-Class Mail" (if First-Class Mail); "U.S. Postage and Fees Paid"; city and state; and permit number. The city, state, and permit number may be omitted in a company permit imprint indicia, subject to 5.3.9.

5.3.9 Use of a Company Permit Imprint

[1-4-07] A company permit imprint is one in which the exact name of the company or individual holding the permit is shown in the indicia in place of the city, state, and permit number. If a company permit imprint is used for eVS under 705.2.9, the

marking “eVS” (or alternative “eVS” or “E-VS”) is placed directly below the name on a separate line. As an option for eVS mail only, “Permit No.” and the permit number used exclusively for eVS may appear on a separate line between the company name and the marking “eVS.” The following standards apply:

a. For 1 year from the date of mailing, the permit holder or its agent must keep records for each mailing paid with a company permit imprint and make them available for USPS review on request. These records include (for each version of what was mailed, if applicable) the weight of a single piece; the total number of pieces mailed; the total postage; the date(s) and post office(s) of mailing; and other records required by the postage rate claimed or the payment method used. A complete sample mailpiece must be included for each identical-weight mailing, or each commingled or combined version in a nonidentical-weight mailing. Sample pieces are not required for nonidentical-piece Standard Mail and Package Services machinable or irregular parcel mailings (e.g., merchandise and other fulfillment mailings).

b. Each mailpiece must bear a complete domestic return address. The return address on official mail is subject to the corresponding standards. On unendorsed Standard Mail and Bound Printed Matter, the return address is permitted below the indicia. Except for official mail, if the return address is *not* the physical location at which the USPS may review the records listed in 5.3.9a (i.e., where they are kept or can be made available) or is *not* a point of contact from which such a physical location can be readily determined, the mailer must:

   1. Include in the indicia the 5-digit ZIP Code of the physical location at which the records listed in 5.3.9a are either kept or can be made available for USPS review.

   2. Provide the postmaster of that post office with a complete sample mailpiece (except as noted above); the date(s) and post office(s) of mailing; and the name and local address of the party from whom the records listed in 5.3.9a may be obtained.

5.3.10 Indicia Formats

[8-17-06] Unless prepared under the option in 5.3.11, permit imprint indicia for ordinary mail and official mail must be prepared in one of the formats exemplified in Exhibit 5.3.10, as applicable to the rate claimed or type of mail. (Not all permissible combinations of content elements are shown.) Specific markings may be required by the standards for the rate claimed.

Exhibit 5.3.10 Indicia Formats for Official Mail and Other Classes

First-Class Official Mail:

FIRST-CLASS MAIL POSTAGE & FEES PAID AGENCY NAME PERMIT NO. G-999	PRESORTED FIRST-CLASS MAIL POSTAGE & FEES PAID AGENCY NAME PERMIT NO. G-999	FIRST-CLASS MAIL AUTO POSTAGE & FEES PAID AGENCY NAME PERMIT NO. G-999

Note: These are only examples; not all possible variations are shown. When not in indicia, class or rate must be marked on mailpiece, directly below or to the left of the indicia.

Standard Mail Official Mail:

PRSRT STD POSTAGE & FEES PAID AGENCY NAME PERMIT NO. G-999	PRESORTED STANDARD AUTOCR POSTAGE & FEES PAID AGENCY NAME PERMIT NO. G-999	PRSRT STD AUTO POSTAGE & FEES PAID AGENCY NAME PERMIT NO. G-999

Note: These are only examples; not all possible variations are shown. When not in indicia, class or rate must be marked on mailpiece, directly below or to the left of the indicia.

Package Services Official Mail:

POSTAGE & FEES PAID AGENCY NAME PERMIT NO. G-999	MEDIA MAIL POSTAGE & FEES PAID AGENCY NAME PERMIT NO. G-999	PRSRT BOUND PRINTED MATTER POSTAGE & FEES PAID AGENCY NAME PERMIT NO. G-999

Note: These are only examples; not all possible variations are shown. When not in indicia, class or rate must be marked on mailpiece, directly below or to the left of the indicia.

604.5.3.10

First-Class Mail:

FIRST-CLASS MAIL
U.S. POSTAGE
PAID $0.39
PERMIT NO. 1

FIRST-CLASS MAIL
U.S. POSTAGE
PAID
MAILED FROM ZIP CODE 10001
PERMIT NO. 1

FIRST-CLASS MAIL
AUTO
U.S. POSTAGE PAID
NEW YORK, NY
PERMIT NO. 1

FIRST-CLASS MAIL
U.S. POSTAGE PAID
1 OZ.
PERMIT NO. 1

PRESORTED
FIRST-CLASS MAIL
U.S. POSTAGE PAID
NEW YORK, NY
PERMIT NO. 1

PRIORITY MAIL
U.S. POSTAGE PAID
WASHINGTON, DC
PERMIT NO. 1

Note: These are only examples; not all possible variations are shown. When not in indicia, class or rate must be marked on mailpiece, directly below or to the left of the indicia.

Standard Mail:

PRSRT STD
ECRWSS
U.S. POSTAGE
PAID
PERMIT NO. 1

PRESORTED STANDARD
AUTOCR
U.S. POSTAGE PAID
JOHN DOE COMPANY

PRSRT STD
AUTO
U.S. POSTAGE PAID
NEW YORK, NY
PERMIT NO. 1

(Presorted rate)

NONPROFIT ORG.
U.S. POSTAGE
PAID
PERMIT NO. 1

NONPROFIT ORGANIZATION
AUTOCR
U.S. POSTAGE PAID
WASHINGTON, DC
PERMIT NO. 1

NONPROFIT
U.S. POSTAGE
PAID
HAPPY HEART SOCIETY

(Nonprofit-authorized organizations)

U.S. POSTAGE
PAID
JOHN DOE COMPANY
PRESORTED STANDARD

PRESORTED STANDARD

U.S. POSTAGE
PAID
NEW YORK, NY
PERMIT NO. 1
ZIP CODE 10001

(Class omitted from indicia - see note below)

Note: These are only examples; not all possible variations are shown. When not in indicia, class or rate must be marked on mailpiece, directly below or to the left of the indicia.

Package Services

Parcel Post/Parcel Select:

PARCEL POST
U.S. POSTAGE PAID
NEW YORK, NY
PERMIT NO. 1

PARCEL SELECT
U.S. POSTAGE PAID
NEW YORK, NY
PERMIT NO. 1

Bound Printed Matter:

BOUND PRINTED MATTER
CAR-RT SORT
U.S. POSTAGE PAID
NEW YORK, NY
PERMIT NO. 1

PRESORTED BOUND
PRINTED MATTER
U.S. POSTAGE PAID
NEW YORK, NY
PERMIT NO. 1

Media Mail:

PRESORTED
MEDIA MAIL
U.S. POSTAGE PAID
NEW YORK, NY
PERMIT NO. 1

Library Mail:

LIBRARY MAIL
U.S. POSTAGE PAID
NEW YORK, NY
PERMIT NO. 1

5.3.11 Optional Indicia Format

Permit imprint indicia may be prepared in a format other than the basic format described in 5.3.10, subject to these conditions:

a. The rule that forms a box around the content of the indicia may be omitted if the content remains as specified in 5.3.6 through 5.3.9 and Exhibit 5.3.10.

b. Unless printed directly on an address label, the indicia content must be placed within a clear area no smaller than 1/2 inch high and 1/2 inch wide, no more than 1-1/2 inches below or left from the upper right corner of the mailpiece or of the address area when oriented to read the address, regardless of processing category or postage rate claimed. If printed on an address label (including paper, adhesive, and multilayer sandwich labels), the space allowed for the

indicia content must be rectangular, large enough to ensure legibility of that content from a normal reading distance and to separate it from other information on the label, and located in the upper right corner of the label when oriented to read the address.

c. No printing appears in the indicia other than that required or allowed under 5.3.6 through 5.3.9.

d. Except as required to enclose the permit information, no printing appears above or to the right of the permit information when the indicia is printed directly on the mailpiece or within the address area or on the address label.

e. Except for indicia printed on address labels, the permit information is printed in no smaller than 4-point type. In indicia printed on address labels under 5.3.11b, the permit information must be legible.

f. Except as required to enclose the permit information, decorative designs intended to be part of the indicia design must appear below or to the left of the permit information in an area extending no farther than 4-1/2 inches to the left of the right edge, and 1-1/2 inches below the top edge of the mailpiece, address area, or address label, as applicable. Such designs must not resemble or imitate a postage meter imprint, postage stamp, postcard postage, or other postage payment method; and they must not include words, symbols, or designs used by the USPS to identify a class of mail, rate of postage, or level of service, *unless* such elements are correctly used under the applicable standards for the mailpiece on which they appear and the corresponding postage and fees have been paid.

g. All other applicable standards in 5.0 are met.

6.0 Payment of Postage

6.1 Basic Standards

The mailer is responsible for proper payment of postage. Postage on all mail must be fully prepaid at the time of mailing, except as specifically provided by standard for:

a. Business reply mail (see 507.8.0) and metered reply mail (see 4.4.2) handled as business reply mail.

b. Merchandise return service (see 507.10.0).

c. Certain mail sent by members of the Armed Forces (see 703.4.0).

d. Certain matter by or for the blind or handicapped (see 703.5.0).

e. Official mail (see 703.6.0 and 703.7.0).

f. Keys and identification devices returned to owners (see 123.1.5 and 133.1.8).

6.2 Unpaid Mailable Matter for Private Delivery

If mailable matter without postage, intended for delivery by a private delivery company, is found in USPS collection boxes (or other receptacles for mail deposit), USPS facilities, or USPS mail processing operations, the company is contacted to

pick up the matter by the close of the next workday. If the company does not pick up the matter, it is returned to the sender, postage due. If the sender cannot be identified or refuses the matter, it is treated as dead mail.

6.3 Payment for Postage Due Mail

Customers must pay in cash for postage-due mail before the mail is delivered. If postage-due collections equal about $10 or more every 60 days, payment may be made by advance deposit of money in a postage due account. Postage on quantity mailings found in private mailboxes is subject to 8.1.1. Government agencies using penalty mail must pay postage due through an OMAS postage due account. Government agencies may no longer use penalty meter strips or penalty mail stamps to pay postage due.

6.4 Advance Deposit Account

Mailers may choose to establish an advance deposit account(s) from which postage, per piece charges, and other fees are deducted. For certain extra services, an advance deposit account is required. Mailers may use a single advance deposit account to pay postage due charges for more than one extra service (e.g., business reply mail, merchandise return service, and bulk parcel return service).

6.5 Annual Accounting Fee for Extra Services

Except for accounts used solely to pay postage due for shortpaid mail, address correction notices, and undeliverable-as-addressed pieces returned to sender (e.g., return service requested), mailers must pay a separate annual accounting fee for each extra service paid through an advance deposit account. This fee covers the administrative cost of maintaining the account and provides the mailer with the accounting of all charges deducted from that account. The accounting fee is charged once each 12-month period on the anniversary date of the initial accounting fee payment. The fee may be paid in advance only for the next year and only during the last 60 days of the current service period. The fee charged is that which is in effect on the date of payment.

7.0 Computing Postage

7.1 General Standards

7.1.1 Determining Single-Piece Weight for Retail and Discount Mail

To determine single-piece weight in any mailing at single-piece rates, in a bulk mailing at Parcel Post, Media Mail, or Library Mail rates, or in any bulk rate mailing of nonidentical-weight pieces, weigh each piece individually. To determine single-piece weight in any other bulk or presort rate mailing, weigh a sample group of at least 10 randomly selected pieces and divide the total sample weight by the number of pieces in the sample. Express all single-piece weights in decimal pounds rounded off to four decimal places.

7.1.2 Expression of Numerical Values

For these standards, express:

a. Piece counts in whole numbers.

b. Weights in decimal pounds (e.g., 1.1250 pounds) rounded as shown below.

c. Postage in decimal dollars (e.g., $0.1625) rounded as shown below.

d. Intermediate postage figures on all permit imprint and Periodicals statements (rounded off) to four decimal places. On all postage affixed statements (rounded off) to three decimal places. An intermediate postage figure is defined as follows: For First-Class Mail, Standard Mail, and Package Services mailings, any figure on any line of a postage statement, with the exception of the "Total Postage" line, is an intermediate figure. For Periodicals mailings, any figure on any line of a Form 3541, with the exception of the "Total Outside-County Postage," "Total In-County Postage," and "Total Foreign Postage" lines is an intermediate figure.

e. Total postage figures (rounded off) to two decimal places. A total postage figure is defined as follows: For First-Class Mail, Standard Mail, and Package Services mailings any figure on a "Total Postage" line. For Periodicals mailings, any figure on a "Total Outside-County Postage," "Total In-County Postage," and "Total Foreign Postage" line.

7.1.3 Rounding Numerical Values

For these standards:

a. *Round off* requires increasing by 1 the last digit to be kept if the digit to its right, which is not to be kept, is 5 or greater. If that digit is 4 or less, the last digit kept is unchanged (e.g., 3.376 rounded off to two decimal places is 3.38, 3.374 is 3.37).

b. *Round up* requires increasing by 1 the last digit to be kept if there are any digits to its right, regardless of significance (e.g., rounding up either 3.3701 or 3.379 to two decimal places yields 3.38).

8.0 Insufficient or Omitted Postage

8.1 Insufficient Postage

8.1.1 Definition

Mail of any class, including mail indicating extra services (except Express Mail, Registered Mail, and nonmachinable First-Class Mail), that is received at either the office of mailing or office of address without enough postage is marked to show the total (rounded off) deficiency of postage and fees. Individual such pieces (or quantities fewer than 10) are delivered to the addressee on payment of the charges marked on the mail. For quantity mailings of 10 or more pieces, the mailer is notified so that the postage charges may be adjusted before dispatch.

8.1.2 Undeliverable and Refused Mail

Mail with insufficient postage that is refused by the addressee or otherwise undeliverable is:

a. Returned to the sender with the reason for nondelivery "Returned for Additional Postage" if First-Class Mail with a return address. *The sender may affix the additional postage, cross out the reason for nondelivery, and remail the piece.*

b. Returned to the sender and delivered when the sender pays the total deficient postage and additional postage for forwarding or return if other than First-Class Mail and with a return address.

c. Treated as dead mail if it has no return address.

8.1.3 Nonmachinable Mail

Shortpaid nonmachinable First-Class Mail is returned to the sender for additional postage.

8.1.4 Adding to Original Postage

Postage stamps or meter stamps originally affixed to insufficiently prepaid mail are accepted in payment of postage to the amount of their face value when the mail is again presented for mailing.

8.1.5 Damaged Postage

When the cancellation impression shows that a postage stamp (or stamps) was wholly or partly lost, the piece is handled as if correct postage had been paid for the class and weight of the piece absent any evidence to the contrary.

8.1.6 Registered Mail With Insufficient Postage

If shortpaid Registered Mail is found in ordinary mail, with only the First-Class rate of postage paid, the piece is delivered to the addressee as ordinary First-Class Mail. If the amount of postage and fees affixed indicates that the piece was intended to be registered, the piece is rated as postage due and forwarded to the addressee through the Registered Mail. If shortpaid Registered Mail is found in the Registered Mail, the piece is delivered without the collection of postage due. The additional postage is collected from the sender.

8.1.7 Express Mail With Insufficient Postage

An insufficiently prepaid Express Mail shipment is never endorsed “Postage Due,” and collection of deficient postage is never attempted from the addressee. For an Express Mail Next Day, Second Day, Military, or Same Day Airport Service item received at the office of mailing without sufficient adhesive or meter stamps, the mailer is contacted to correct the deficiency before dispatch. If postage is paid by an Express Mail corporate account or federal government “Postage and Fees Paid” indicia, and the mailer writes an incorrect postage and/or fees amount, the account is debited for the correct amount. For a Custom Designed Service item received at the office of mailing with an incorrect weight listed, and if postage is paid with adhesive or meter stamps, the mailer is contacted to correct the deficiency before dispatch. If postage is paid by an Express Mail corporate account or federal government “Postage and Fees Paid” indicia, the account is debited for the correct amount.

8.2 Omitted Postage

8.2.1 Handling Mail With Omitted Postage

Matter of any class, including that for which extra services are indicated, received at either the office of mailing or office of address without postage, is endorsed “Returned for Postage” and is returned to the sender without an attempt at delivery. If a mail recipient attempts to return or forward the mail without paying additional postage when required, the mail is endorsed “Returned for Postage” and returned

to the recipient. If no return address is shown, or the delivery and return addresses are identical, or the delivery and return addresses are different but for the same person or organization, the piece is treated as dead mail.

8.2.2 Handling Unpaid Metered Reply Mail

Metered reply mail on which the mailer failed to imprint a meter stamp is treated as business reply mail (BRM). Such mail is delivered on payment of postage and the applicable business reply per-piece charge for basic BRM.

8.3 Mailable Matter Without Postage in or on Mail Receptacles

8.3.1 Penalty

Whoever knowingly and willfully deposits any mailable matter (such as statements of account, circulars, sale bills, or other like matter) on which no postage is paid, in any letterbox established, approved, or accepted by the Postmaster General for the receipt or delivery of mail matter on any route, with intent to avoid payment of lawful postage thereon, shall for each such offense be fined not more than $300 (18 USC 1725).

8.3.2 Liability for Postage

Except for limited use by newspapers under 508.3.0, any mailable matter not bearing postage found in, upon, attached to, supported by, or hung from private mail receptacles described in 508.3.0 is subject to payment of the same postage if carried by mail.

8.3.3 Full Distribution

If there is a distribution of identical pieces to all or substantially all addresses on a route, only a representative number of pieces is returned to the delivery unit. Postage is computed as described in 8.3.4.

8.3.4 Partial Distribution

If there is a distribution of pieces to some, but not all, addresses on a route, pieces are returned to the delivery unit for use in computing the postage due. First-Class Mail rates are applied to matter that would require First-Class Mail postage if mailed. For other matter, if the piece weighs less than 16 ounces, the applicable single-piece First-Class Mail or Priority Mail rate based on the weight of the piece is applied, or an applicable Package Services rate is applied, whichever is lower. If the piece weighs 16 ounces or more, the Package Services rate is applied.

8.3.5 Known Distributor

If there is reason to believe that a private delivery firm or an individual within the post office delivery area is responsible for the delivery, the local postmaster notifies that party of the number of pieces and the postage due. If, within 5 days after notice, the firm or individual agrees to pay the postage due, payment is accepted and the pieces are delivered to the addressees. The party paying the postage may choose to redeliver the pieces rather than have the USPS deliver them. If the pieces are found to have been removed from receptacles improperly, they are delivered without postage charge.

8.3.6 Unknown Distributor

If the party responsible for delivery is not known or if the firm requested fails to pay the postage, the pieces are returned to the publisher or manufacturer, postage due and endorsed to show they were found in or on the addressee's mailbox without postage. If a publisher or manufacturer gives the name and telephone number of a person to contact and guarantees postage payment, the pieces are redelivered to the addressees. If the publisher or manufacturer is unknown or refuses the pieces, the matter is treated as dead mail.

9.0 Refunds and Exchanges

9.1 Stamp Exchanges

9.1.1 USPS Fault

The post office may correct mistakes in selling damaged, defective, or otherwise unserviceable stamps by exchanging stamps at full postage value.

9.1.2 Damaged in Customer's Possession

Stamps that are damaged or otherwise unusable for postage (because of humidity, moisture, or other causes) while in a customer's possession may be exchanged only for an equal number of stamps of the same denomination. Unusable stamps accepted from a customer under these conditions must be those on sale at post offices within 12 months before the transaction. Quantities of the same denomination over $10 must be returned in the same configuration as when bought (i.e., sheets, coils, booklets). Each such transaction is limited to $100 worth of postage from each customer.

9.1.3 Condition and Quantity

The stamps presented for exchange must be in substantially whole condition, with the denomination evident. If coils of stamps are partially stuck together and cannot be counted, the postmaster may accept the customer's estimate of the number of stamps left in the coil and give equal quantities in exchange.

9.1.4 Appeal

Any customer denied an exchange for damaged stamps may appeal the postmaster's decision to the Consumer Advocate, USPS Headquarters (see 608.8.0 for address).

9.1.5 Purchase Error

If a customer bought the wrong denomination stamps (or the wrong kind, size, or denomination envelope), they may be exchanged at full postage value. Only full panes of stamps, coils of stamps in the original sealed wrappers, full boxes of stamped envelopes, or original sealed packs of stamped cards may be exchanged. A customer exchanging $250 or more of such stock must show proof of identity (e.g., a driver's license) and must present the stock for exchange to the postal unit from which his or her mail is delivered.

9.1.6 Exchange of Spoiled and Unused Postal Matter

Unusable and spoiled stamped envelopes or stamped cards, if uncanceled, and unused precanceled stamps and stamped cards, are exchanged for other postage-stamped paper. Only the buyer may exchange stamped envelopes or aerogrammes (airletter sheets) with a printed return address and stamped cards with any printed matter of the buyer. If there is no purchaser's printing, any responsible person may exchange them. These conditions apply:

a. Stamped envelopes (mutilated no more than is necessary to remove contents): postage value plus value of postage added because of a rate increase or for additional service.

b. Unmutilated aerogrammes (airletter sheets): postage value minus $0.01 for each aerogramme redeemed.

c. Unmutilated single and double stamped cards: 85% of postage value, plus full value of postage added because of a rate increase or for additional service. Either half of a double stamped card may be redeemed, if the double card is printed and cut for use as single cards. Unused double stamped cards printed for reply should not be separated but, if they are separated in error and the buyer presents both halves, the cards may be redeemed. Reply halves of double stamped cards returned to sender outside of the mail are not redeemable by the original buyer, even though the reply half received no postal service.

d. Sheet stamped cards spoiled when cut to size: 85% of postage value plus full value of postage added because of a rate increase or for additional service, if all cut sections are submitted.

e. Stamps affixed to commercial envelopes and postcards: 90% of postage value. Envelopes and postcards must be in substantially whole condition and in lots of at least 50 of the same denomination and value.

f. Unused precanceled stamps in full coils and in full sheets redeemed from precanceled permit holders: 90% of postage value.

9.1.7 Stamps Converted to Other Postage Forms

A customer may submit postage stamps for conversion to an advance deposit for permit imprint mailings, subject to these conditions:

a. Only full panes of postage stamps (or coils of stamps in the original sealed wrappers) are accepted for conversion. Accepted stamps include commemorative stamps issued no more than 1 year before the requested conversion date or regular stamp issues not officially withdrawn from sale.

b. A request for stamp conversions must be made in writing to the district manager of Customer Service and Sales in the district where the customer's post office is located. The customer's request must include:

c. Name, denomination, quantity, and value of stamps for which conversion is requested.

d. Name of the post office where the stamps were bought.

e. Evidence of purchase of the stamps.

f. The amount of postage applied to a permit imprint advance deposit account through conversion is the full face value of the stamps.

g. The district manager may ask the customer to submit additional records to support the information in the request. After reviewing the documentation, the district manager approves or denies the request. The customer is notified when the conversion is approved. The postmaster is advised of the procedures for accepting the stamps and making the required accounting entries.

h. No part of any amount applied to a permit imprint advance deposit account from the conversion of postage stamps is refundable in cash or by any other means.

9.1.8 Not Exchangeable

The following postage items are not exchangeable:

a. Adhesive stamps, unless mistakes were made in buying, stamps were defective, stamps were affixed to commercial envelopes and postcards, or under 9.1.7.

b. Stamps cut from stamped cards, stamped envelopes, or aerogrammes (airletter sheets).

c. Parts and pieces of stamped cards.

d. Stamped cards, stamped envelopes, and aerogrammes received for reply.

e. Mutilated and defaced stamps.

9.2 Postage and Fee Refunds

9.2.1 Refund Standards for Postage and Fees

A refund for postage and fees may be made:

a. Under the standards below if postage and retail or extra service fees are paid and no service is rendered, or if the amount collected was more than the lawful rate.

b. Under 9.3 for refund requests for postage evidencing systems and metered postage. Metered postage is printed by a postage evidencing system (4.0). Refunds may be requested for unused indicia, unused postage value remaining in a postage evidencing system, and the unused balance in a postage payment account.

c. Under 9.4 for refund requests for postage made at the time of mailing.

d. Under 2.0 for rejected personalized envelopes.

e. Under the terms of a contract between the contract postal unit (CPU) and the USPS for unused postage printed by the CPU.

9.2.2 Ineligible Matter

The USPS is presumed at fault and no service is rendered in cases involving returned articles improperly accepted in either domestic or international service because of excess size or weight. Any mailer who customarily weighs and rates mail is expected to be familiar with basic standards. The USPS is not at fault if the mailer is required to withdraw articles from the mail before dispatch.

9.2.3 Torn or Defaced Mail

If First-Class Mail or Package Services is torn or defaced during USPS handling so that the addressee or intended delivery point cannot be identified, the sender may receive a postage refund. This applies only when the failure to process and/or deliver is the fault of the USPS. Where possible, the damaged item is returned with the postage refund.

9.2.4 Full Refund

A full refund (100%) may be made when:

a. The USPS is at fault.

b. Postage or fees are paid in excess of the lawful rate.

c. Service to the country of destination is suspended.

d. Postage is fire-scarred while in USPS custody (including in the letterbox), and the mail is returned to sender without service.

e. Special delivery stamps are mistakenly used to pay postage, and the mail is returned to the sender without service.

f. Fees are paid for special handling, Certified Mail, Delivery Confirmation, or Signature Confirmation and the article fails to receive the extra service for which the fee is paid.

g. Surcharges are mistakenly collected on domestic Registered Mail or collected over the proper amount, or represented by stamps affixed to matter not actually accepted for registration.

h. Fees are paid for return receipt or for restricted delivery, and the USPS (through fault or negligence) fails to furnish the return receipt or its equivalent, or makes erroneous delivery or nondelivery.

i. An annual presort mailing fee is paid for Presorted First-Class Mail, Standard Mail, Presorted Media Mail, or Presorted Library Mail or a destination entry mailing fee is paid for Parcel Select or Bound Printed Matter and no mailings are made during the corresponding 12-month period.

j. Customs clearance and delivery fees are erroneously collected.

k. Fees are paid for registry or insurance service on mail addressed to a country to which such services are not available, unless claim for indemnity is made.

l. Express Mail is not delivered according to the applicable service standard. No refund is made if the mail was properly detained for law enforcement purposes (see *Administrative Support Manual* 274).

9.2.5 Intercepted Mail

When mail is returned at the sender's request or for a reason not the fault of the USPS, any difference between the amount paid and the appropriate surface rate chargeable from mailing office to interception point and return is refunded.

9.2.6 Unallowable Refunds

The limits on refunds are not intended to prohibit payments for unused adhesive stamps and adhesive stamps affixed to unmailed matter in connection with an authorized marketing program. Refunds are not made for the following:

a. An application fee to use permit imprints.

b. Collect on delivery (COD), Express Mail insurance, insured, and registered fees after the USPS accepts the article, even if the article is later withdrawn from the mail.

c. Unused adhesive stamps (may be exchanged under 9.1.1 through 9.1.5 in *Stamp Exchanges*).

d. Adhesive stamps affixed to unmailed matter.

9.2.7 Applying for Refund

For refunds under 9.2, the customer must apply for a refund on Form 3533; submit it to the postmaster; and provide the envelope, wrapper, or a part of it showing the names and addresses of the sender and addressee, canceled postage and postal markings, or other evidence of postage and fees paid. Refunds for metered postage are submitted under 9.3.

9.2.8 Ruling on Refund Request

Refund requests are decided based on the specific type of postage or mailing:

a. Refunds under 9.2. The local postmaster grants or denies refunds under 9.2. The customer may appeal an adverse ruling through the postmaster to the Pricing and Classification Service Center (PCSC) manager who issues the final agency decision.

b. Dated metered postage, except for PC Postage systems, under 9.3. The postmaster at the licensing post office grants or denies requests for refunds for dated metered postage under 9.3. The licensee may appeal an adverse ruling within 30 days through the manager, Postage Technology Management, USPS Headquarters (see 608.8.0 for address), who issues the final agency decision. The original meter indicia must be submitted with the appeal.

c. Undated metered postage under 9.3. The manager, business mail entry at the district post office overseeing the mailer's licensing post office, or designee authorized in writing, grants or denies requests for refunds for undated metered postage under 9.3. The customer may appeal a decision on undated metered postage within 30 days through the manager, business mail entry, or designee, to the PCSC manager who issues the final agency decision. The original meter indicia must be submitted with the appeal.

d. PC Postage systems under 9.3. The system provider grants or denies a request for a refund for dated indicia printed by PC Postage systems under 9.3 using established USPS criteria. For dated PC Postage indicia only, the licensee may appeal an adverse ruling within 30 days through the manager, Postage Technology Management, USPS Headquarters, who issues the final agency decision. The original indicia must be submitted with the appeal.

e. Optional procedure (OP) mailings. Mailer's request for a refund must be submitted to the manager, Business Mailer Support, USPS Headquarters (see 608.8.0 for address).

9.2.9 Semipostal Stamps

Customers may exchange or convert semipostal stamps for their postage value (i.e., the price of the stamps less the contribution amount) to the extent exchange or conversion of postage stamps is permitted under 9.0. The postage the customer exchanges or converts is equal to the First-Class Mail single-piece rate in effect at the time of exchange. However, if the customer provides a receipt showing the date of purchase, the postage exchanged or converted is equal to the First-Class Mail single-piece rate in effect at the time of purchase. The contribution amount is not refundable and is not included in the exchange or conversion value.

9.2.10 Business Reply Mail

A business reply mail (BRM) permit holder may request a credit or refund for postage affixed to returned BRM pieces. Only the value of the postage affixed may be credited or refunded. Refunds are not given for foreign postage affixed to BRM. To receive a refund for postage affixed to returned BRM pieces, the permit holder must submit a completed Form 3533 to the postmaster, documenting the excess postage payment for which a credit or refund is desired. The permit holder also must present to the designated office properly faced and banded bundles of 100 identical BRM pieces with identical amounts of postage affixed. A charge of $35 per hour, or fraction thereof, is assessed for the workhours used to process the refund. With permission from the postmaster, a BRM permit holder may submit a bundle with fewer than 100 BRM pieces. Refunds are not given for any BRM or QBRM per piece charges, annual accounting fees, quarterly fees, or monthly maintenance fees.

9.3 Refund Request for Postage Evidencing Systems and Metered Postage

9.3.1 Unused Postage Value in Postage Evidencing Systems

The unused postage value remaining in a postage evidencing system when withdrawn from service may be refunded, depending upon the circumstance and the ability of the USPS to make a responsible determination of the actual or approximate amount of the unused postage value. If the postage evidencing system is withdrawn because of faulty operation, a final postage adjustment or refund will be withheld pending the system provider's report of the cause to the USPS and the USPS determination of whether or not a refund is appropriate and, if so, the amount of the refund. No refund is given for faulty operation caused by the licensee. When a postage evidencing system that is damaged by fire, flood, or similar disaster is returned to the provider, postage may be refunded or transferred when the registers are legible and accurate, or the register values can be reconstructed by the provider based on adequate supporting documentation. When the damaged system is not available for return, postage may be refunded or transferred only if the provider can accurately determine the remaining postage value based on adequate supporting documentation. The licensee may be required to provide a statement on the cause of the damage and to attest that there has not been reimbursement by insurance, or otherwise, and that the licensee will not seek such reimbursement. Refunds for unused postage value are granted as specified in 4.0 in accordance with the following procedures:

a. All postage evidencing systems except for PC Postage systems. The postage evidencing system must be examined to verify the amount before any remaining funds are cleared from the meter, and a refund or credit is initiated for unused postage value or additional money is collected to pay for postage value used, based on what is found. Licensees may also submit their own transaction records, if any, or a system-generated register as supporting documentation.

b. PC Postage systems. The licensee must notify the provider to withdraw the system. To determine the remaining postage value on the PC Postage system, the licensee generates a refund request indicium for transmittal to the provider for verification. A refund can be issued only when the system's postal security device (PSD) is in the provider's possession. The USPS refunds the entire unused postage value remaining on the PSD for the user's system, but the refund is issued through the licensee's provider.

9.3.2 Unused, Dated Postage Evidencing System Indicia, Except PC Postage Indicia

Unused, dated postage meter indicia are considered for refund only if complete, legible, and valid. PC Postage indicia refunds are processed under 9.3.3. All other metered postage refund requests must be submitted as follows:

a. The licensee must submit the request. The refund request must include proof that the person or entity requesting the refund is the licensee for the postage meter that printed the indicia. Acceptable proof includes a copy of the lease, rental agreement, or contract.

b. The licensee must submit the request, along with the items bearing the unused postage, to the licensing post office. The items must be sorted by meter used and then by postage value shown in the indicia, and must be properly faced and bundled in groups of 100 identical items when quantities allow. The request is processed by the USPS. The postmaster approves or denies the refund request.

c. The licensee must submit the refund request within 60 days of the date(s) shown in the indicia.

d. When the unused metered postage is affixed to a mailpiece, the refund request must be submitted with the entire envelope or wrapper. The unused metered postage must not be removed from the mailpiece once applied.

e. Indicia printed on labels or tapes not stuck to wrappers or envelopes must be submitted loose and must not be stapled together or attached to any paper or other medium. However, self-adhesive labels printed without a backing may be submitted on a plain sheet of paper.

f. If a part of one indicium is printed on one envelope or card and the remaining part on one or more, the envelopes or cards must be fastened together to show that they represent one indicium.

g. Refunds are allowable for indicia on metered reply envelopes only when it is obvious that an incorrect amount of postage was printed on them.

h. The refund request must be submitted with Form 3533. A separate Form 3533 must be completed for each meter for which a refund is requested. All identifying information and all sections related to the refund requested must be completed. Charges for processing a refund request for unused, dated meter indicia are as follows:

1. If the total face value of the indicia is $350 or less, the amount refunded is 90% of the face value. USPS may process the refund payment locally via a no-fee postal money order.
2. If the total face value is more than $350, the amount refunded is reduced by a figure representing $35 per hour, or fraction thereof, for the actual hours to process the refund, with a minimum charge of $35. The postmaster will submit the approved Form 3533 to the USPS Imaging and Scanning Center for payment processing through the Accounting Service Center.

9.3.3 Unused, Dated PC Postage Indicia

Unused, dated PC Postage indicia are considered for refund only if complete, legible, and valid. The refund request must be submitted as follows:

a. Only the PC Postage licensee may request the refund. The licensee must submit the request, along with the items bearing the unused postage, to the system provider. The request is processed by the provider, not the USPS.

b. The licensee must submit the refund request within 30 days of the date(s) shown in the indicia.

c. The refund request must be submitted as required in 9.3.2d. through 9.3.2g.

d. The provider may, at its discretion, charge for processing a refund request.

9.3.4 Undated Metered Postage

Unused, undated postage evidencing system indicia are considered for refund only if complete, legible, and valid. The refund request must be submitted as follows:

a. Only the meter licensee or the commercial entity that prepared the mailing for the licensee using the licensee's meter may request the refund. The request must include a letter signed by the meter licensee or the commercial entity that prepared the mailing for the licensee explaining why the mailpieces were not mailed.

b. The minimum quantity of unused, undated metered postage that may be submitted for refund is 500 pieces from a single mailing or, as an alternative, indicia with a total postage value of at least $500 from a single mailing.

c. The meter licensee, or the commercial entity that prepared the mailing for the licensee using the licensee's meter, must submit the request, along with the items bearing the unused postage and the required documentation, to the manager, business mail entry at the district post office overseeing the mailer's licensing post office, or to a designee authorized in writing. The manager or designee approves or denies the refund request.

d. The request must include the items bearing the unused postage, sorted by meter used and then by postage value shown in the indicia. The items must be properly faced and bundled in groups of 100 identical items, when quantities allow, and must meet the requirements of 9.3.2d. through 9.3.2g.

e. The request must be submitted within 60 days of the date the mail was metered. Supporting documentation must be submitted to validate the date. Examples of supporting documentation include the job order from the customer, production records, the USPS qualification report, spoilage report, and reorders created report, as well as customer billing records, postage statements, and a sample mailpiece.

f. The refund request must be submitted with Form 3533. All identifying information and all sections related to the refund requested must be completed. When more than one meter was used to prepare the mailing, a separate Form 3533 must be completed for each.

   1. If the total face value of the indicia for a single mailing submitted for refund is $350 or less, the amount refunded is 90% of the face value. USPS may process the refund payment locally via a no-fee postal money order.

   2. If the total face value of the indicia for a single mailing submitted for refund is more than $350, the amount refunded is reduced by a figure representing $35 per hour, or fraction thereof, for the actual hours to process the refund, with a minimum charge of $35. The manager, business mail entry will submit the approved Form 3533 to the USPS Imaging and Scanning Center for payment processing through the Accounting Service Center.

9.3.5 Ineligible Metered Postage Items

The following metered postage items are ineligible for refunds:

a. Reply envelopes or cards paid at the proper postage rate.

b. Indicia printed on labels or tape removed from wrappers or envelopes.

c. Loose indicia printed on labels or tape that have been stapled together or attached to paper or other medium in any manner.

d. Indicia lacking identification of the licensing post office or other required information.

e. Indicia printed on mail dispatched and returned to sender as undeliverable as addressed, including mail marked “no such post office” and mail addressed for local delivery and returned after directory service was given or delivery was attempted.

9.3.6 Refunds for Metered Postage

Refunds for indicia amounts already printed on an envelope or label but not mailed are made in accordance with 9.3.

9.3.7 Rounding Numerical Values

Any fraction of a cent in the total to be refunded is rounded down to the whole cent (e.g., $4.187 is rounded to $4.18).

9.4 Value Added Refunds

9.4.1 Definition of Value Added Refund

Subject to the standards in 9.4, a *presenter* (i.e., the mailer or other party, such as a presort service bureau), who prepares letter-size First-Class Mail or Standard Mail under 9.4.12 and 9.4.13 for their customers and presents it to the USPS in their behalf, may request a *value added refund* (VAR) for postage affixed to mail in excess of the rate applicable to that mail when presented to the USPS. A presenter must be authorized by the USPS to seek the refund. Any refund is issued to the presenter, and the disposition of any such refund is a private matter between the presenter and the presenter's customer.

9.4.2 Application

The presenter must make a written application to the postmaster serving each location where VAR mailings are to be deposited, verified, and paid. The application must describe the presenter's mail preparation system and the documentation that it can produce. The application must also show that the presenter can produce the postage statements and the refund documentation required by 9.4.17. The postmaster forwards the application and supporting documentation for approval to the Business Mailer Support manager, USPS Headquarters.

9.4.3 Mailer System

Eligibility to submit requests for VARs requires that the presenter process and document mail through a fully automated mail sorting system. The system must include barcoding equipment (e.g., multiline optical character readers) to read the address information and determine the correct ZIP+4 code; an ink jet or laser printer to apply the correct POSTNET barcode in the required location; and a barcode reader (BCR) to read the POSTNET barcode, verify it for accuracy, and sort the mailpiece to the correct location.

9.4.4 Presenter Agreement

In applying for authorization to make VARs, the presenter agrees:

a. That verification samples taken by the USPS represent the entire mailing and are to be used to adjust the total refund amount requested.

b. To provide the USPS with advance written notice of plans for system changes that affect the calculation of postage, amount of refund, generation of required documentation, or mail presorting.

c. To cooperate with the USPS during mail verification or system audits, and to process sampled mail through barcode readers (BCRs) when requested.

9.4.5 Authorization

If the application is approved, an authorization to make refund requests is valid for a period not to exceed 2 years, subject to renewal after USPS review.

9.4.6 Appeal

If the application is denied, the presenter may file a written appeal within 15 days through Business Mailer Support, USPS Headquarters, to the Business Mail Acceptance manager, who issues the final agency decision.

9.4.7 Suspension

The Business Mailer Support manager may suspend an authorization after determining that the presenter does not meet the standards in 9.4.

9.4.8 Cancellation

The Business Mailer Support manager may cancel an authorization for any of these reasons:

a. The presenter consistently provides incorrect information and is unwilling or unable to correct the problem.

b. The presenter continually fails to meet the standards in 9.4.

c. No mailings are made under these procedures during any 12 consecutive months.

9.4.9 Appeal of Cancellation or Suspension

A cancellation or suspension takes effect 15 days from the presenter's receipt of the notice unless, during that time, the presenter files a written appeal with the Business Mailer Support manager, USPS Headquarters, stating why the authorization should not be canceled or suspended. If the manager upholds the action, the appeal is forwarded to the Business Mail Acceptance manager, USPS Headquarters, who issues the final agency decision. A final cancellation takes effect 15 days after receipt by the presenter.

9.4.10 Form 8096 Required

The presenter must provide the USPS with an original Form 8096 completed and signed by each of the presenter's customers who meter any pieces in the mailing for which a VAR is requested, and a list of those customers. If postage is affixed to the pieces using a postage evidencing system by an intermediate agent (not the presenter of the mailing) for the owner of the pieces, a signed Form 8096 must be on file from the agent whose postage evidencing systems were used to affix the postage. Refund requests are denied if all required Forms 8096 are not provided.

9.4.11 Form 8096 Not Required

Form 8096 is not required for a customer whose mail is metered by the presenter with the presenter's own postage evidencing system. In such cases, the presenter must provide the post office where it submits refund requests with a list, in ascending numeric order, of its own postage evidencing system serial numbers and those of any intermediate agent used for affixing postage to the pieces included in the mailing.

9.4.12 First-Class Mail

If a VAR request is submitted when a First-Class Mail mailing is presented to the USPS, each piece in the mailing must be:

a. Letter-size and weigh less than the applicable maximum weight for automation rate mail as required in 201.3.3.

b. Part of an automation rate mailing prepared by the presenter.

c. Metered by the presenter or the presenter's customer at the Presorted First-Class or automation rates applicable to a piece of that weight, including the full postage for the second and third ounces, if applicable.

9.4.13 Standard Mail

If a VAR request is submitted when a Standard Mail mailing is presented to the USPS, each piece in the mailing must be:

a. Letter-size and weigh less than the applicable maximum weight for automation rate mail as required in 201.3.4.

b. Part of an automation rate mailing prepared by the presenter.

c. Metered by the presenter or the presenter's customer at a nonautomation rate or at any automation minimum per piece rate. Pieces for each entry must be prepared as a separate mailing if the destination entry rates are claimed.

9.4.14 Criteria for Mailing

A mailing for which a VAR request is submitted must meet these criteria:

a. The presenter must process the mail for each customer so that the rate of postage affixed on each piece can be documented by customer, unless otherwise authorized by Business Mailer Support, USPS Headquarters, and rate category.

b. Documentation must be kept showing internal quality control procedures done for each mailing submitted for which a VAR is claimed.

c. Mail must be prepared by the standards corresponding to the First-Class Mail or Standard Mail rate claimed.

d. The presenter must be authorized by Business Mailer Support to submit Standard Mail mailings that contain both Regular and Nonprofit rate pieces under the applicable standards.

e. Each piece in the mailing for which barcodes are applied by an MLOCR must bear an automation marking that also describes the method of postage payment and the rate of postage affixed for metered and precanceled stamp mail or other postage information for permit imprint mail as described in 705.5.0, *First-Class Mail or Standard Mail Mailings With Different Payment Methods*.

9.4.15 Postage Statement

The presenter must provide a complete and accurate postage statement with each mailing annotated to show the presort option used to prepare that mailing, and reporting postage data based on the rate category for which each piece qualifies when presented to the USPS.

9.4.16 Applying for Refund

To request a VAR, Form 3533 and supporting documentation as described below must be provided with the corresponding mailing at the time of mailing. After the time of mailing, refund applications are not considered. The entry office postmaster pays refunds weekly or on another schedule agreed to with the mailer.

9.4.17 Documentation for Mailing

Mailers are required to submit or generate the following reports:

a. Each mailing must be accompanied by all of the following documentation to enable the VAR request and the specific and efficient USPS verification of that request:

1. Form 3533, if a net VAR refund is due.
2. The applicable postage statement.
3. The USPS qualification report in standardized format detailing by ZIP Code the number of pieces qualifying for each rate by presort level. If plant-verified drop shipment (PVDS) is used for Standard Mail, a separate USPS qualification report must be generated for each entry destination.
4. The USPS Summary ZIP Destination report in one of two standardized formats that lists by tray destination and rate category: each mail category, postage payment type, weight and rate affixed (report all postage affixed First-Class Mail pieces as weighing one ounce); number of pieces; dollar amount of postage affixed to those pieces; cumulative postage affixed; total postage; net postage due; cumulative postage due; and a running total of the number of pieces. If plant-verified drop shipment (PVDS) is used for Standard Mail, a separate USPS Summary ZIP Destination report must be generated for each entry destination. This report is not required if there is only one metered rate in the mailing. Business Mailer Support, USPS Headquarters, may authorize submission of only portions of this report.
5. The USPS Postage Summary in a standardized format. This report shows, by type of payment method, the total postage claimed for all pieces in the mailing by rate level and the total postage affixed by rate level. It also shows a grand total summary of postage affixed, postage claimed, and total postage due. If plant-verified drop shipment (PVDS) is used for Standard Mail, a separate USPS Postage Summary report must be generated for each entry destination.
6. Other documentation that may be required by other standards for the rate claimed.

b. The USPS Customer Mail Report must be generated for each mailing, but is required to be submitted to the USPS only when requested by USPS personnel for the resolution of errors (shortpaid and potential MLOCR profiling) detected in a specific mailing. The Customer Mail Report must list each customer by name and provide the following information about their mail: rate affixed, mail category including postage payment type, weight, total postage, postage affixed, number of pieces, cumulative number of pieces, number of pieces rejected, and total pieces fed.

9.5 Express Mail Postage Refund

9.5.1 Who May Apply

A claim for a refund for Express Mail postage may be made only by the mailer (the sender of an Express Mail item or the holder of the Express Mail Corporate Account used to pay for postage).

9.5.2 Conditions for Refund

A refund request must be made within 90 days after the date of mailing as shown in the "Date In" box on Label 11. Except as provided in 114.3.1, a mailer may file for a postage refund only under one of the following circumstances:

a. The item was not delivered or made available for claim as guaranteed under the applicable service purchased.

b. The item was not delivered or made available for claim by the guaranteed delivery time applicable to the service purchased, and delivery was not attempted by the guaranteed delivery time applicable to the service purchased.

9.5.3 Refunds Not Given

A refund claim will not be given if the guaranteed service was not provided due to any of the circumstances in 114.3.1.

9.5.4 How to Apply for a Refund

The mailer must complete Part I of Form 3533 in duplicate and submit it, along with the original customer copy of Label 11, to any post office.

9.5.5 Immediate Refund

If the USPS can determine immediately that the mailer is entitled to a refund and the Express Mail item had postage affixed, then the USPS refunds the postage immediately in cash or with a no-fee money order.

9.5.6 Deferred Refund

If the USPS cannot determine immediately that the mailer is entitled to a refund, then the USPS researches the application and, if appropriate, issues a refund to the mailer within 5 business days.

9.5.7 Refunds Through a Corporate or Agency Account

If the USPS determines that the mailer is entitled to a refund and postage was paid through an Express Mail Corporate Account or a federal government agency account, then the USPS refunds the postage by issuing a credit to that account within 5 business days.

10.0 Revenue Deficiency

10.1 General

10.1.1 Definition of Revenue Deficiency

Revenue deficiency means a shortage or underpayment of postage or fees. Revenue deficiencies are generally assessed by the postmaster or manager, Business Mail Entry, who issues a written notification to the customer citing the amount of the deficiency and the circumstances.

10.1.2 Appeal of Ruling

[3-15-07] Except as provided under 10.2 and 703.1.0, *Nonprofit Standard Mail*, a mailer may appeal a revenue deficiency assessment by sending a written appeal within 30 days of receipt of the notification to the appropriate postmaster or manager in 10.1.2a. through 10.1.2c. In all cases, the mailer may be asked to give more information or documentation to support the appeal. Failure to do so within

30 days of the request is grounds for denying an appeal. Any decision that is not appealed as prescribed becomes the final agency decision. Mailers may send appeals as follows:

a. To the district manager, Finance, for revenue deficiencies for fees. The district manager, Finance, issues the final USPS decision.

b. To the postmaster or manager, Business Mail Entry, for revenue deficiencies for postage. The postmaster or manager, Business Mail Entry, forwards the appeal to the PCSC manager, who issues the final agency.

c. To the manager, Mailing Standards (see 608.8.0 for address), if the PCSC manager first assessed the deficiency. The manager, Mailing Standards issues the final agency decision.

10.2 Nonprofit Standard Mail

10.2.1 Assessment and Appeal

A revenue deficiency may be assessed in the amount of the unpaid postage against any person or organization that mailed, or caused to be mailed, ineligible matter at the Nonprofit Standard Mail rates in violation of 703.1.0. Nonprofit mailers have two levels of appeal. They may appeal revenue deficiency assessments as follows:

IF THE INITIAL REVENUE DEFICIENCY ASSESSMENT WAS MADE BY:	FIRST-LEVEL APPEAL	SECOND-LEVEL APPEAL AND FINAL USPS DECISION
Postmaster or manager, Business Mail Entry	PCSC	Manager of Mailing Standards
PCSC	Manager of Mailing Standards (see 608.8.0 for address)	Vice President, Pricing and Classification (see 608.8.0 for address)

All appeals must be submitted in writing within 30 days of the previous USPS decision. Any decision that is not appealed as prescribed becomes the final agency decision; no appeals are available within the USPS beyond the second appeal.

10.2.2 Collection

Any deficiency assessed under 10.2.1 that is found to be due and payable to the USPS in the final USPS decision must be paid promptly. If the USPS does not receive payment within 30 days, the USPS may deduct from the violator's trust account or any other funds in USPS possession any deficiencies incurred within 12 months of the date of the final mailing on which the deficiency was assessed.